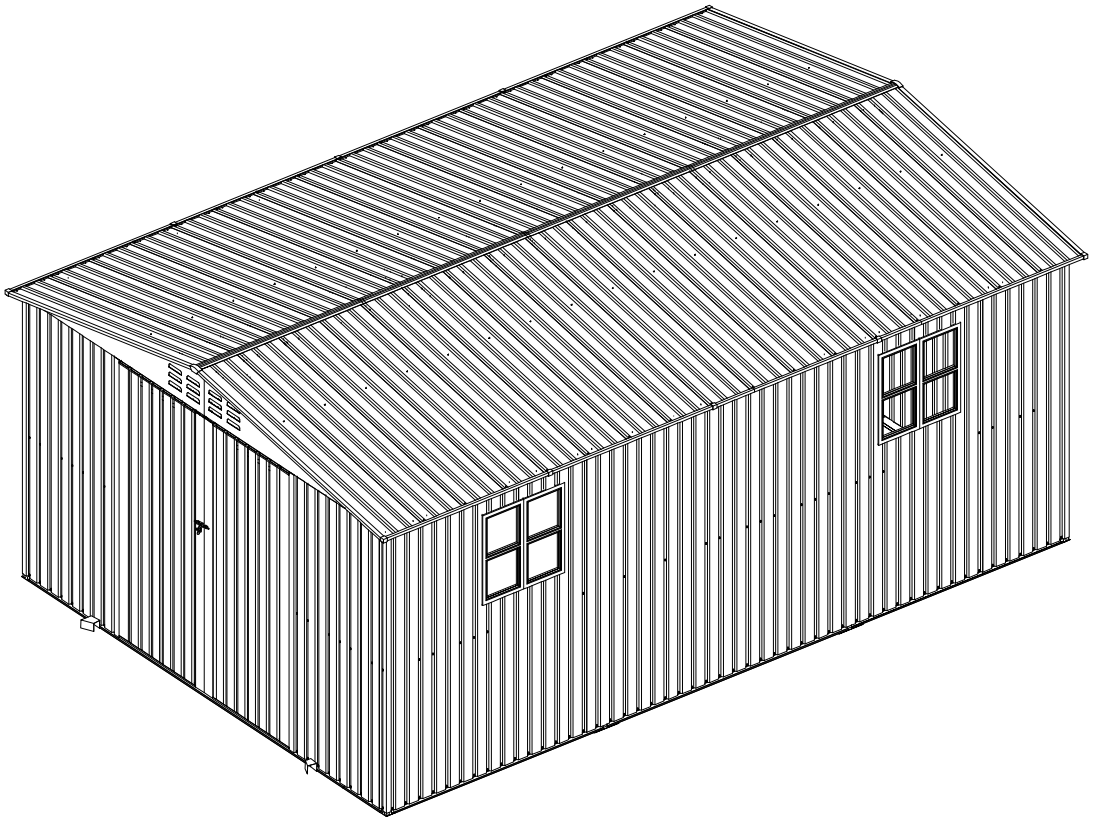
ASSEMBLY INSTRUCTIONS

# METAL GARDEN SHED

12(W)x18(D)FT WITH WINDOWS



EASYHAWKservice@outlook.com

**Our team is available 24/7 to help with any product questions. Contact us anytime!**

Recommended to wear gloves to avoid scratches.
Please read the instructions COMPLETELY before assembly.

After opening the package, if you notice a slight deformation in the wall panels, there's no need for concern.
Our material is flexible and can be manually bent back into place.

## ASSEMBLY PREPARATION

Please check local building codes regarding footings, location and other requirements before beginning construction. Study and understand this owner's manual of important information and helpful tips for easier and more enjoyable assembly.

### Assembly instructions:

Reviewing all instructions and the appropriate information before you begin, make sure following the step sequence carefully for successful results.

### Flooring base:

The site must be prepared so that the base of the shed is level all round and checking with a spirit level is required.
The base can be constructed by treated timber or concrete,in order to stop the moisture getting into the shed,The shed is not designed to be built onto lawn directly.Also the ground will get muddy during rainy days.
If a concrete pad is made,it is important that this slopes towards the edges to prevent water ingress.Time must be allowed for any concrete or cement to dry before building the shed on top.
Bases can also be constructed from bricks,blocks,or mounted on a concrete pad.
The bricks or blocks should be cemented onto firm and level concrete footings and the greenhouse frame drilled and screwed to the base.

### Parts and Parts List:

Before you start, separate and identify all the parts and hardware to be sure that you have all the necessary parts for your building (refer to the Parts List Page).

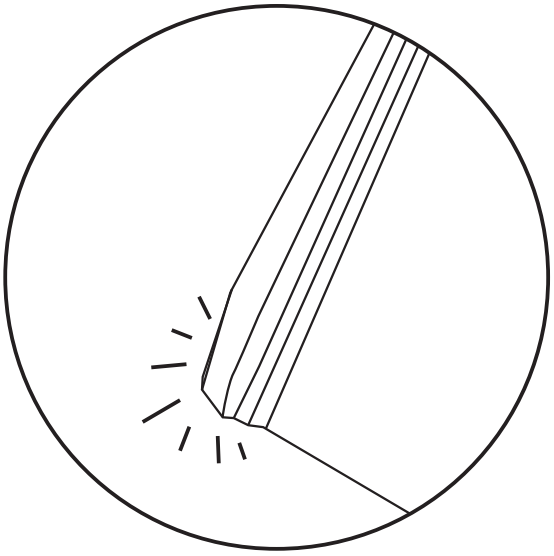
Do not attempt to assemble the building if parts are missing because any building left partially assembled may be seriously damaged by light winds.

### Safety must be put in the No. 1 position:

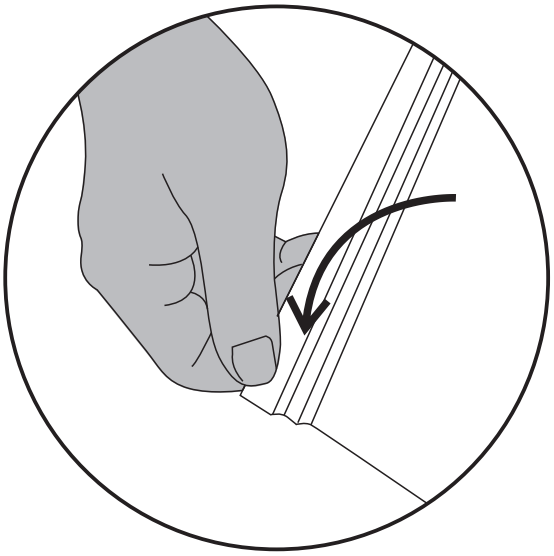
1 Select a dry and calm day for your assembly. Team works ( Two or more people ) are required during the assembly;
2 Wearing safety gloves, eye protection and long sleeves during the assembly to prevent injury; Pay attention to the sharp edge of some parts;
3 Children and pets are not allowed entering into the construction site;
4 Never concentrate your total weight on the roof of the building. When using a step ladder make sure that it is safety;

### Care & Maintenance:

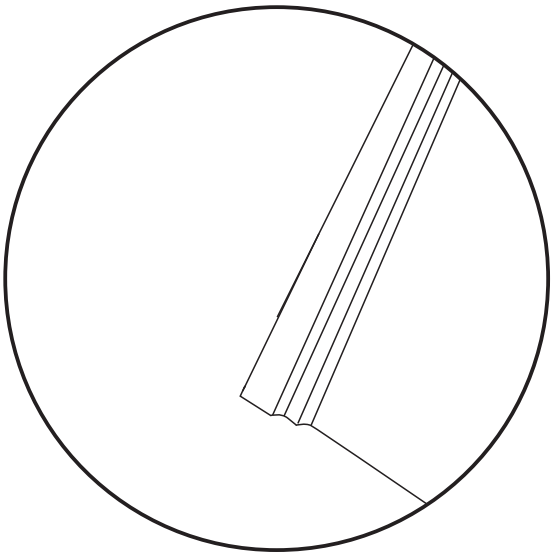
1 Keep the shed clean with soft cloth, use water if necessary;
2 Keep the door tracks clear of dirt and other stuff that prevent them from sliding easily.
3 Clean the snow with necessary tools to make sure it is safe to enter into;
Heavy snow may cause collapse, please make sure safety before entering into.
4 The shed is not made for living but storing stuff.



NOTICE:If there is slight bending on the corners

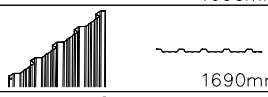
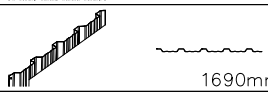
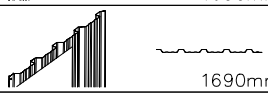


Pls wear gloves and stretch the corners slightly until they are flat

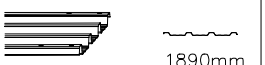
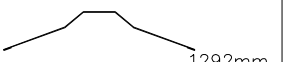
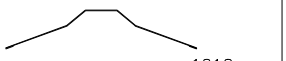
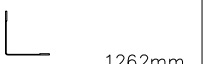
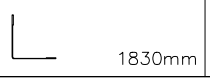


Then the sheets will be normal and there is no effection to the assembling

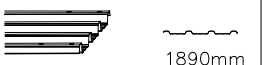
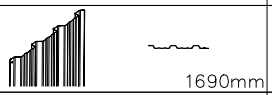
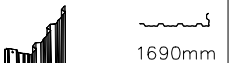
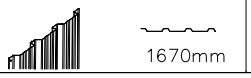
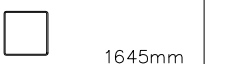
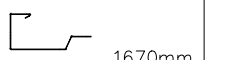
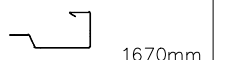
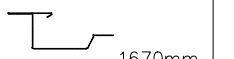
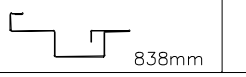
## Carton:1/5

| NO. | PART. | Qty. |
|---|---|---|
| W3 |  1690mm | 8 |
| W5 |  1690mm | 18 |
| W5L |  1690mm | 2 |
| W5R |  1690mm | 2 |

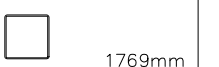
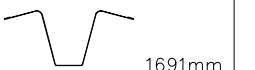
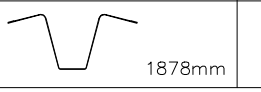
## Carton:2/5

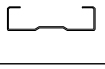
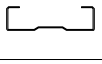
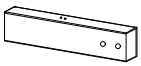
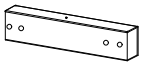
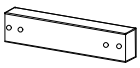
| NO. | PART. | Qty. |
|---|---|---|
| W12 |  1890mm | 29 |
| 18 |  1292mm | 3 |
| 18Z |  1610mm | 1 |
| 19 |  1262mm | 4 |
| 19L |  1597mm | 2 |
| 19R |  1279mm | 2 |
| 20 |  1890mm | 4 |
| 23 |  1830mm | 1 |

## Carton:3/5

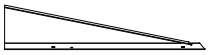
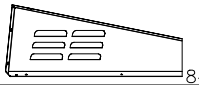
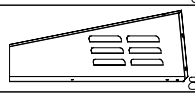
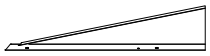
| NO. | PART. | Qty. |
|---|---|---|
| W12 |  1890mm | 5 |
| W3 |  1690mm | 9 |
| W8 |  1690mm | 4 |
| D1 |  1670mm | 2 |
| D2 |  1670mm | 2 |
| 5 |  1645mm | 4 |
| 17L |  1690mm | 1 |
| 17R |  1690mm | 1 |
| 17E |  1670mm | 2 |
| 17F |  1670mm | 1 |
| 17G |  1670mm | 1 |
| 22A |  838mm | 4 |

## Carton:4/5

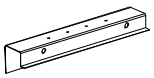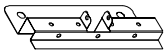
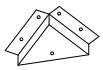
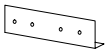
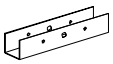
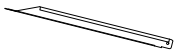
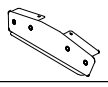
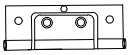
| NO. | PART. | Qty. |
|---|---|---|
| 2L |  1641mm | 2 |
| 2 |  1878mm | 2 |
| 2R |  1641mm | 2 |
| 3L |  1762mm | 2 |
| 3R |  1762mm | 2 |
| 7B |  1648mm | 2 |
| 7 |  1878mm | 2 |
| 7F |  1648mm | 2 |
| 8L |  1769mm | 2 |
| 8R |  1769mm | 2 |
| 9F |  1691mm | 2 |
| 9 |  1878mm | 1 |

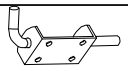
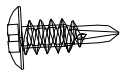
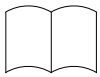
| | | |
|---|---|---|
| 25 |  1691mm | 2 |
| 26 |  1691mm | 2 |
| 26Z |  1880mm | 2 |
| 28 |  835mm | 2 |
| 28D |  983mm | 4 |
| 5A |  1672mm | 4 |
| A6 |  1828.2mm | 4 |
| A7 |  1000mm | 4 |
| YE1 |  596.5mm | 2 |
| YE2 |  868mm | 2 |

## Carton:5/5

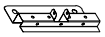
| NO. | PART. | Qty. |
|---|---|---|
| 21A |  950*188mm | 2 |
| 21L |  842*352mm | 2 |
| 21R |  842*352mm | 2 |
| 21B |  950*188mm | 2 |
| WD |  640*318mm | 4 |
| PC |  568*254mm | 4 |
| Y |  640*318mm | 4 |

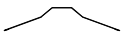
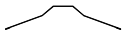
## Part Listing

| NO. | PART. | Qty. |
|---|---|---|
| 4B |  200mm | 2 |
| 4D |  188*87mm | 4 |
| 4H |  140*140mm | 4 |
| 4M |  200*40mm | 4 |
| 10 |  100mm | 2 |
| 10F |  350mm | 2 |
| 11L |  350mm | 2 |
| 11R |  350mm | 2 |
| 27 |  120*148mm | 4 |
| 27A |  120*148mm | 4 |
| 30L |  174mm | 2 |
| 30R |  174mm | 2 |
| A1 |  93*89mm | 4 |
| A2 |  93*89mm | 4 |
| A3 |  124*155mm | 4 |
| A4 |  124*155mm | 4 |
| A5 |  265*58mm | 4 |
| A8 |  167*30mm | 8 |
| Y1L |  | 1 |
| Y1R |  | 1 |
| H |  | 4 |
| H1 |  | 1 |
| H2 |  | 1 |

| | | |
|---|---|---|
| H3 |  | 2 |
| C |  | 4 |
| F |  | 4 |
| F4 |  | 4 |
| F5 |  | 2 |
| F7 |  | 810 |
| F8 |  | 130 |
| F10 |  | 6 |
| M8 |  | 50 |
| M10 |  | 16 |
| S4 |  | 1020 |
| S6 |  | 150 |
| S7 |  | 150 |
| S8 |  | 40 |
| S10 |  | 30 |
| Gloves |  | 2 |
| Brochures |  | 1 |
| | | |
| | | |
| | | |
| | | |
| | | |

PART LIST

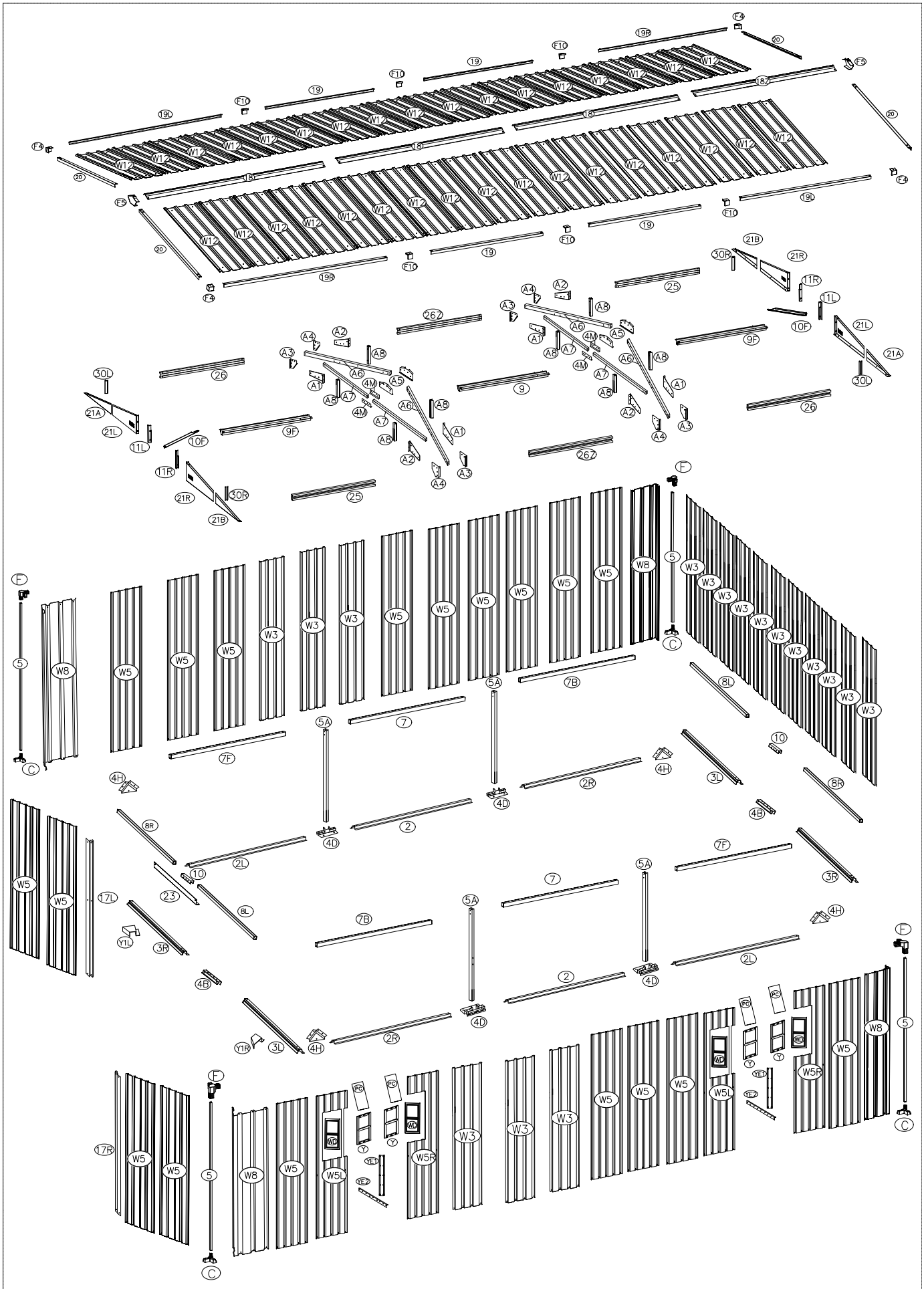
| NR. | PART | MM | QTY |
|---|---|---|---|
| UNDER | | | |
| 2L |  | 1641mm | 2 |
| 2 | | 1878mm | 2 |
| 2R | | 1641mm | 2 |
| 3L | | 1762mm | 2 |
| 3R | | 1762mm | 2 |
| 4B |  | 200mm | 2 |
| 4D |  | 188*87mm | 4 |
| 4H |  | 140*140mm | 4 |
| Y1L |  | | 1 |
| Y1R |  | | 1 |
| MIDDLE | | | |
| 5 |  | 1645mm | 4 |
| 7B | | 1648mm | 2 |
| 7 | | 1878mm | 2 |
| 7F | | 1648mm | 2 |
| 8L | | 1769mm | 2 |
| 8R | | 1769mm | 2 |
| 10 |  | 100mm | 2 |
| W3 |  | 1690mm | 17 |
| W5 |  | 1690mm | 18 |
| W5L |  | 1690mm | 2 |
| W5R |  | 1690mm | 2 |
| W8 |  | 1690mm | 4 |
| 5A |  | 1672mm | 4 |
| TOP1 | | | |
| 21A |  | 950*188mm | 2 |
| 21L |  | 842*352mm | 2 |
| 21R |  | 842*352mm | 2 |
| 21B |  | 950*188mm | 2 |
| A1 |  | 93*89mm | 4 |
| A2 |  | 93*89mm | 4 |

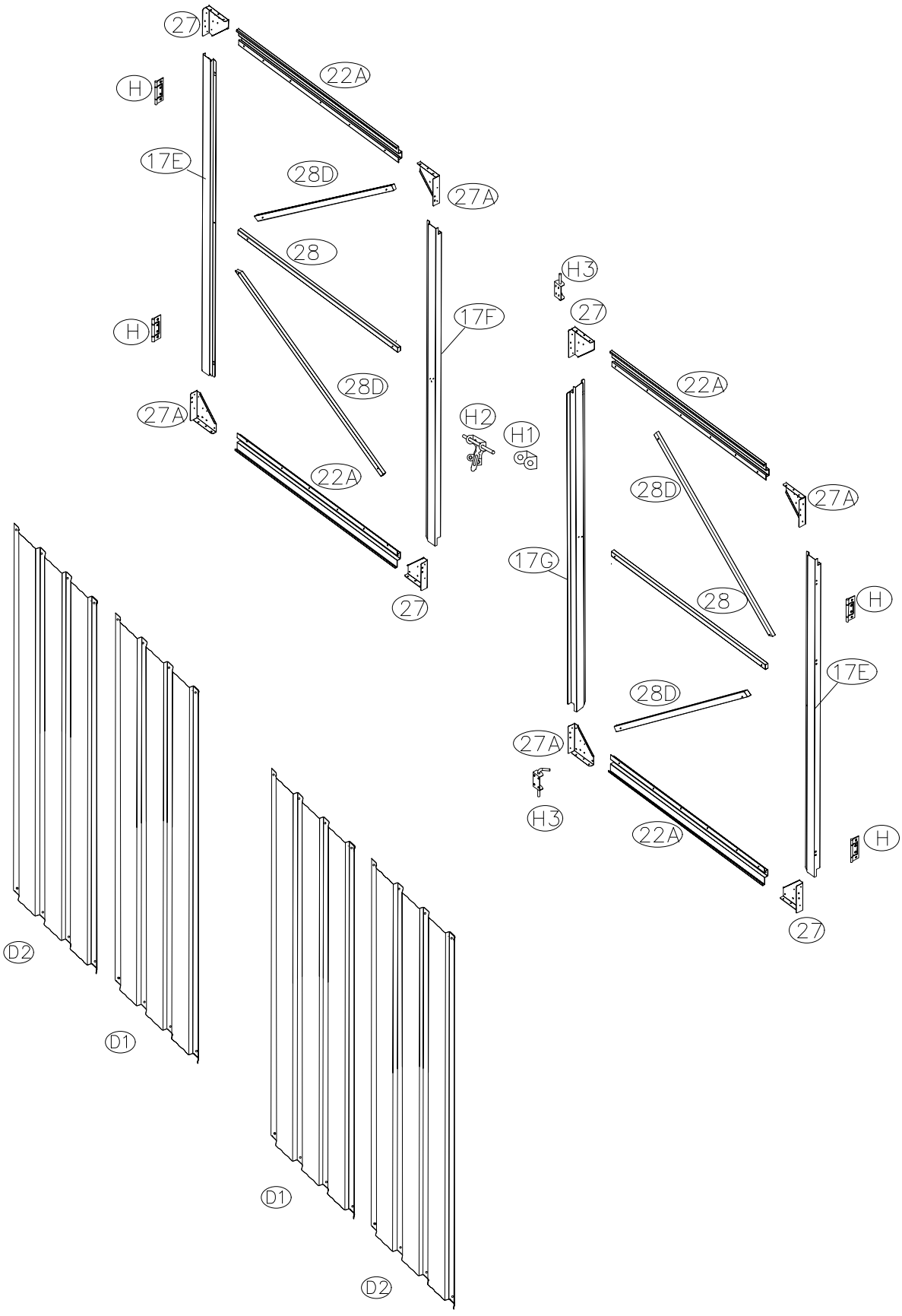
| NR. | PART | MM | QTY |
|---|---|---|---|
| A3 |  | 124*155mm | 4 |
| A4 |  | 124*155mm | 4 |
| A5 |  | 265*58mm | 4 |
| A6 |  | 1828.2mm | 4 |
| A7 | | 1000mm | 4 |
| A8 |  | 167*30mm | 8 |
| 4M |  | 200*40mm | 4 |
| 9F |  | 1691mm | 2 |
| 9 | | 1878mm | 1 |
| 10F |  | 350mm | 2 |
| 11L |  | 350mm | 2 |
| 11R | | 350mm | 2 |
| 25 |  | 1691mm | 2 |
| 26 | | 1691mm | 2 |
| 26Z | | 1880mm | 2 |
| 30L |  | 174mm | 2 |
| 30R | | 174mm | 2 |
| | TOP2 | | |
| W12 |  | 1890mm | 34 |
| 18 |  | 1292mm | 3 |
| 18Z |  | 1610mm | 1 |
| 19 |  | 1262mm | 4 |
| 19L |  | 1597mm | 2 |
| 19R |  | 1279mm | 2 |
| 20 |  | 1890mm | 4 |
| 23 |  | 1830mm | 1 |
| WD |  | 640*318mm | 4 |
| PC |  | 568*254mm | 4 |
| Y |  | 640*318mm | 4 |
| YE1 |  | 596.5mm | 2 |
| YE2 |  | 868mm | 2 |
| | | | |

PART LIST

| NR. | PART | MM | QTY |
|---|---|---|---|
| FRONT DOOR | | | |
| 17L |  | 1690mm | 1 |
| 17R |  | 1690mm | 1 |
| 17E |  | 1670mm | 2 |
| 17F |  | 1670mm | 1 |
| 17G |  | 1670mm | 1 |
| 22A |  | 838mm | 4 |
| 27 |  | 120*148mm | 4 |
| 27A |  | 120*148mm | 4 |
| 28 |  | 835mm | 2 |
| 28D | | 983mm | 4 |
| D1 |  | 1670mm | 2 |
| D2 | | 1670mm | 2 |
| ANNEX | | | |
| H |  | | 4 |
| H1 |  | | 1 |
| H2 |  | | 1 |
| H3 |  | | 2 |
| C |  | | 4 |
| F |  | | 4 |
| F4 |  | | 4 |
| F5 |  | | 2 |
| F7 |  | | 810 |
| F8 |  | | 130 |
| F10 |  | | 6 |
| M8 |  | | 50 |
| M10 |  | | 16 |
| S4 |  | | 1020 |
| S6 |  | | 150 |
| S7 |  | | 150 |
| S8 |  | | 40 |
| S10 |  | | 30 |

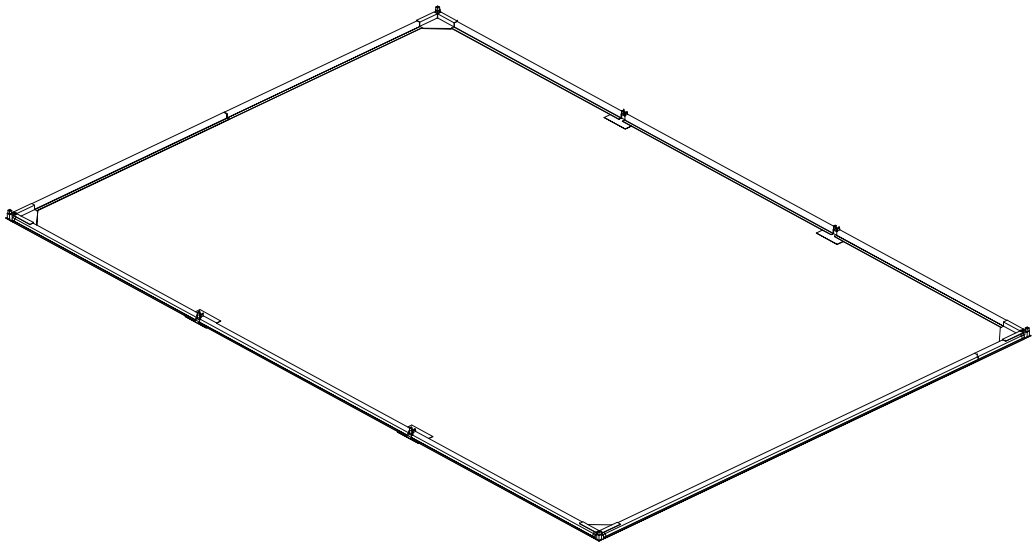
| NR. | PART | MM | QTY |
|---|---|---|---|
| Gloves |  | | 2 |
| Brochures |  | | 1 |


F4
19R
20
F10
19
F5
18
19L
W12
F9
F6
21B
30R
21R
11R
11L
25
A4
A2
A3
A8
A6
A5
A1
A7
4M
26
10F
9F
21L
21A
30L
9
W8
W5
W3
5
C
F
5A
7B
8L
7F
7
4H
2R
3L
8R
4D
4B
2
10
2L
8R
17L
23
3R
Y1L
Y1R
3D
W5R
W5L
WD
PD
Y
YE1
YE2
17R


27
22A
H
17E
28D
27A
28
H
17F
28D
27A
H2
H1
22A
27
H3
27
22A
28D
27A
17G
28
H
17E
28D
27A
H3
22A
H
27
D2
D1
D1
D2

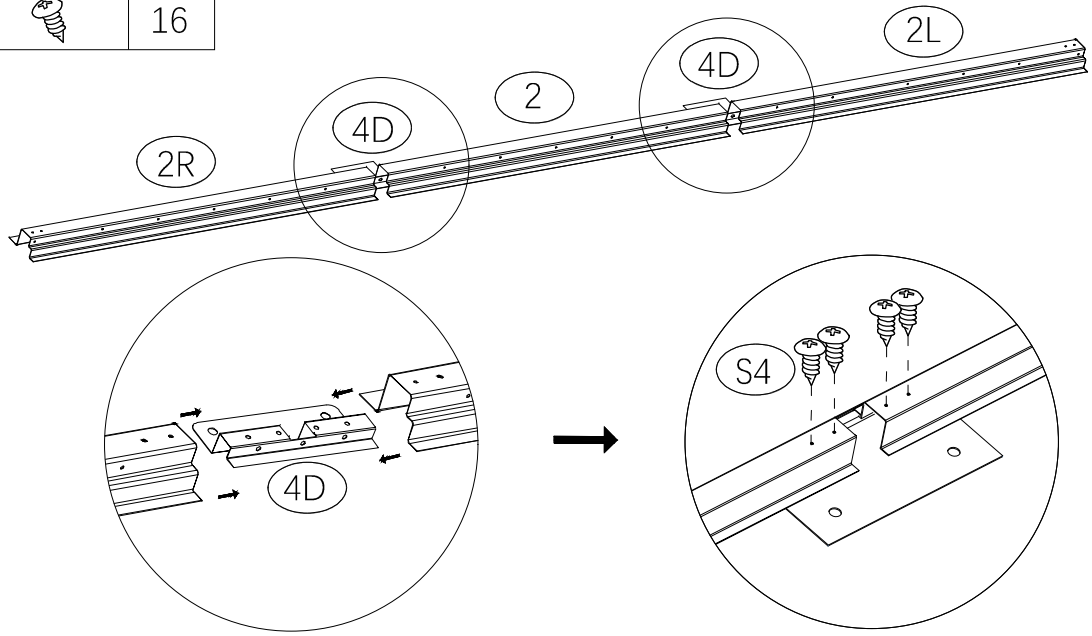
# Part 1 :

## Foundation Installation



STEP 1

| | | |
|---|---|---|
| 2L | | 2 |
| 2 | | 2 |
| 2R | | 2 |
| 4D | | 4 |
| S4 | | 16 |



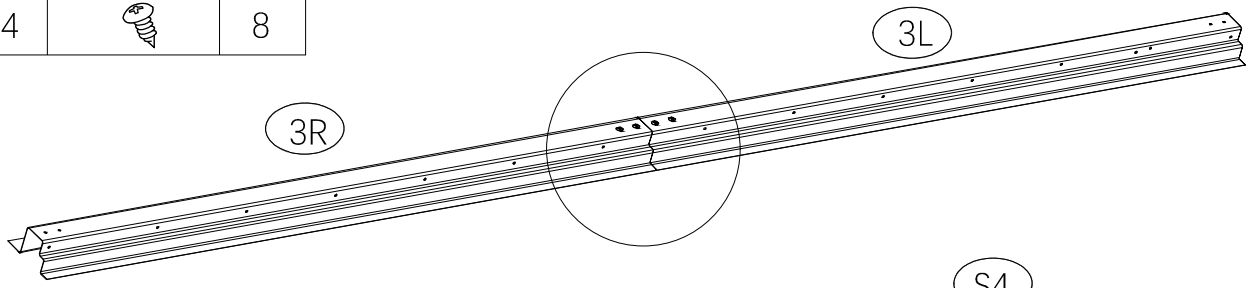


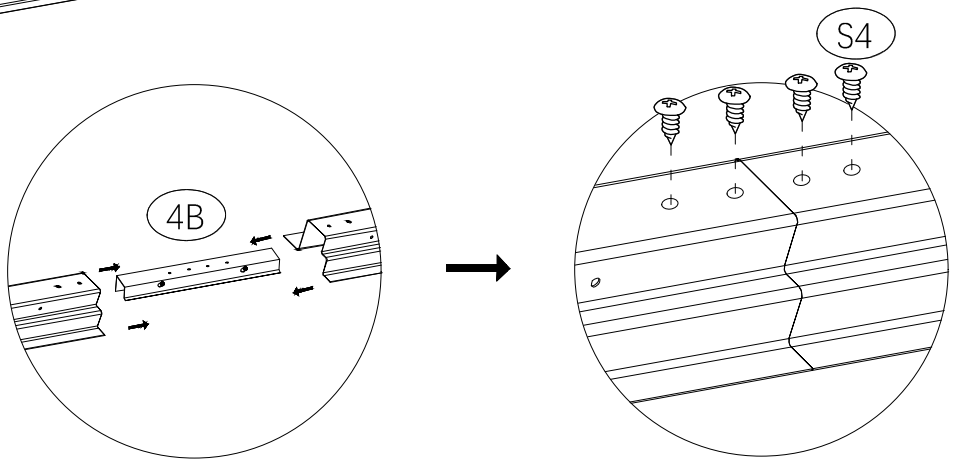


X2

STEP 2

| | | |
|---|---|---|
| 3L | | 2 |
| 3R | | 2 |
| 4B | | 2 |
| S4 | | 8 |

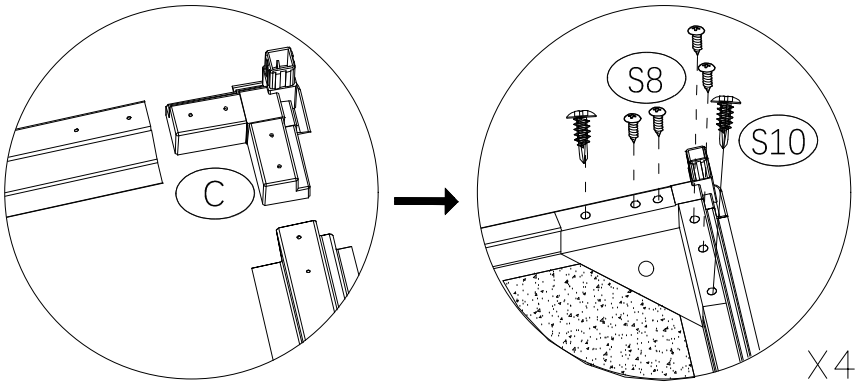


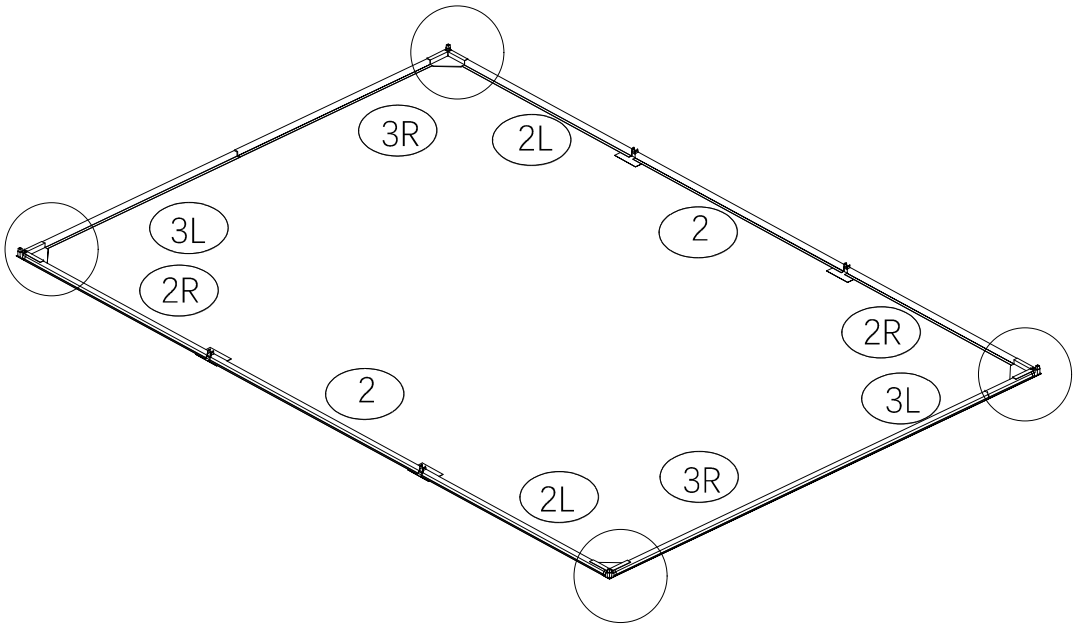




X2

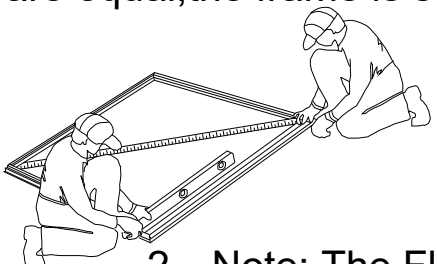
STEP 3

| | | |
|---|---|---|
| C |  | 4 |
| 4H |  | 4 |
| S8 |  | 16 |
| S10 |  | 8 |




1、Note: When diagonal measurements are equal,the frame is square.

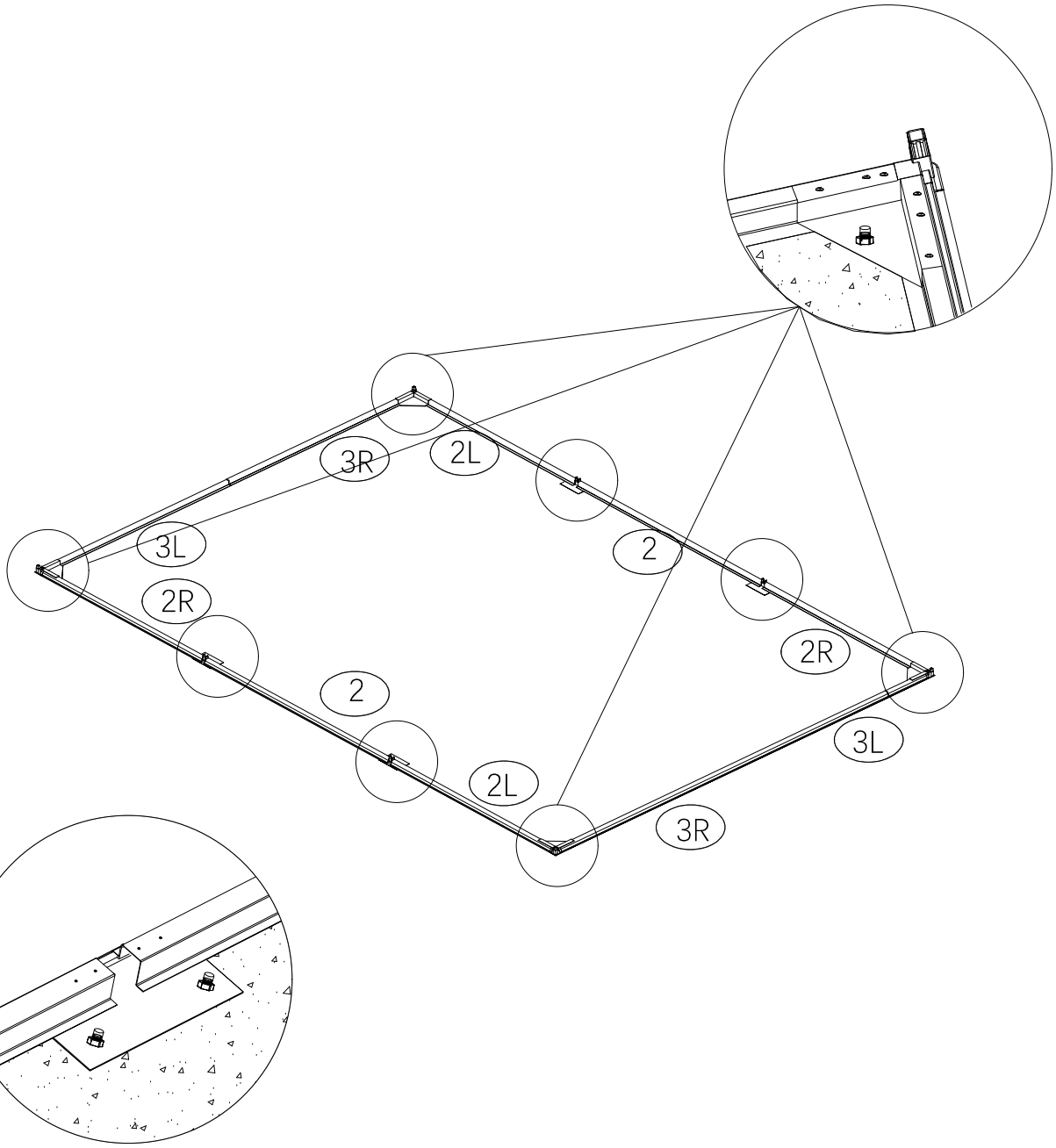


2、Note: The Floor Frame must be BOTH square AND level or the holes will not line up properly.

X2

| M10 |  | 12 |
|---|---|---|

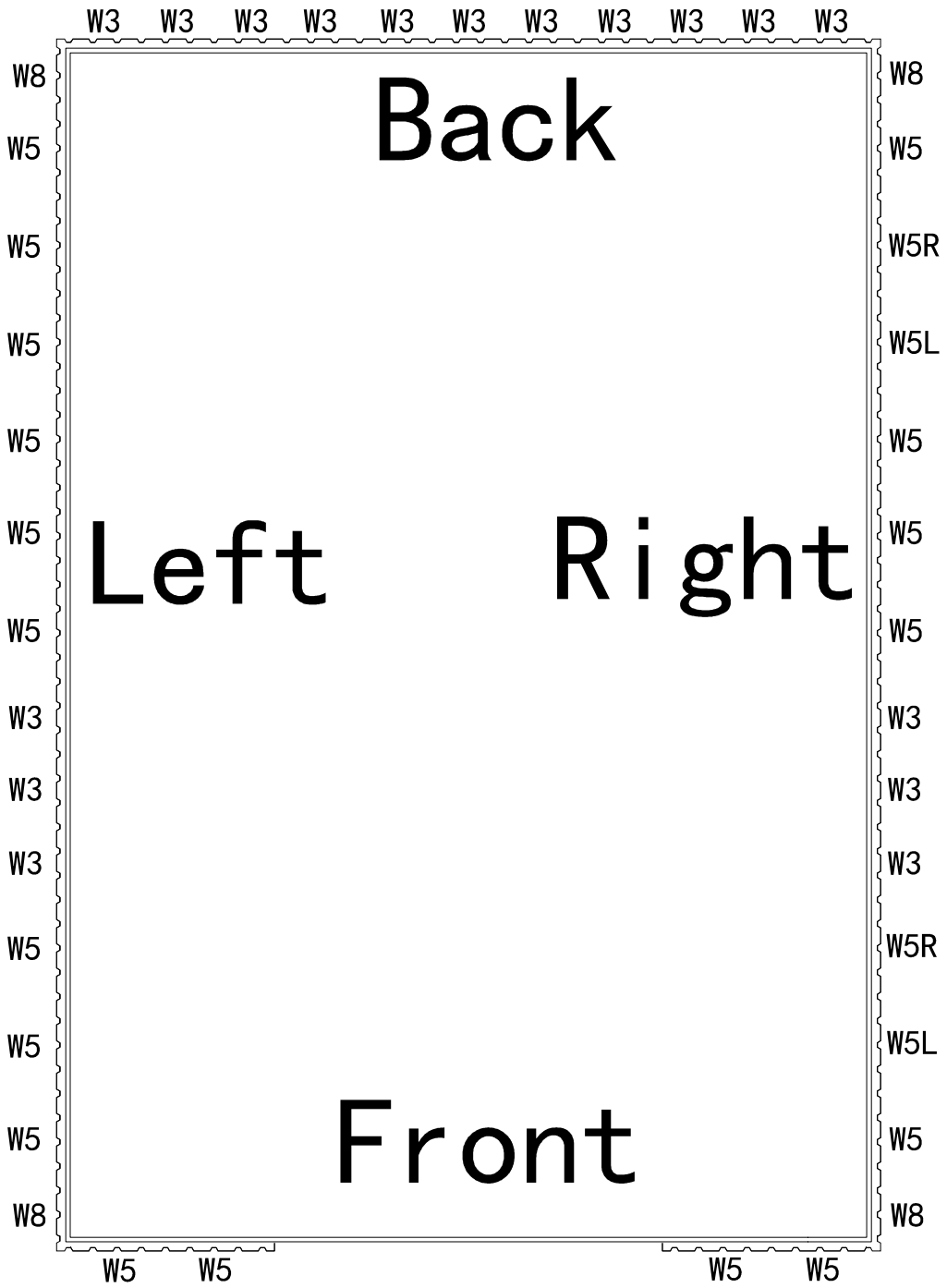
STEP 4




Note: Fix M10 after determining the diagonal length

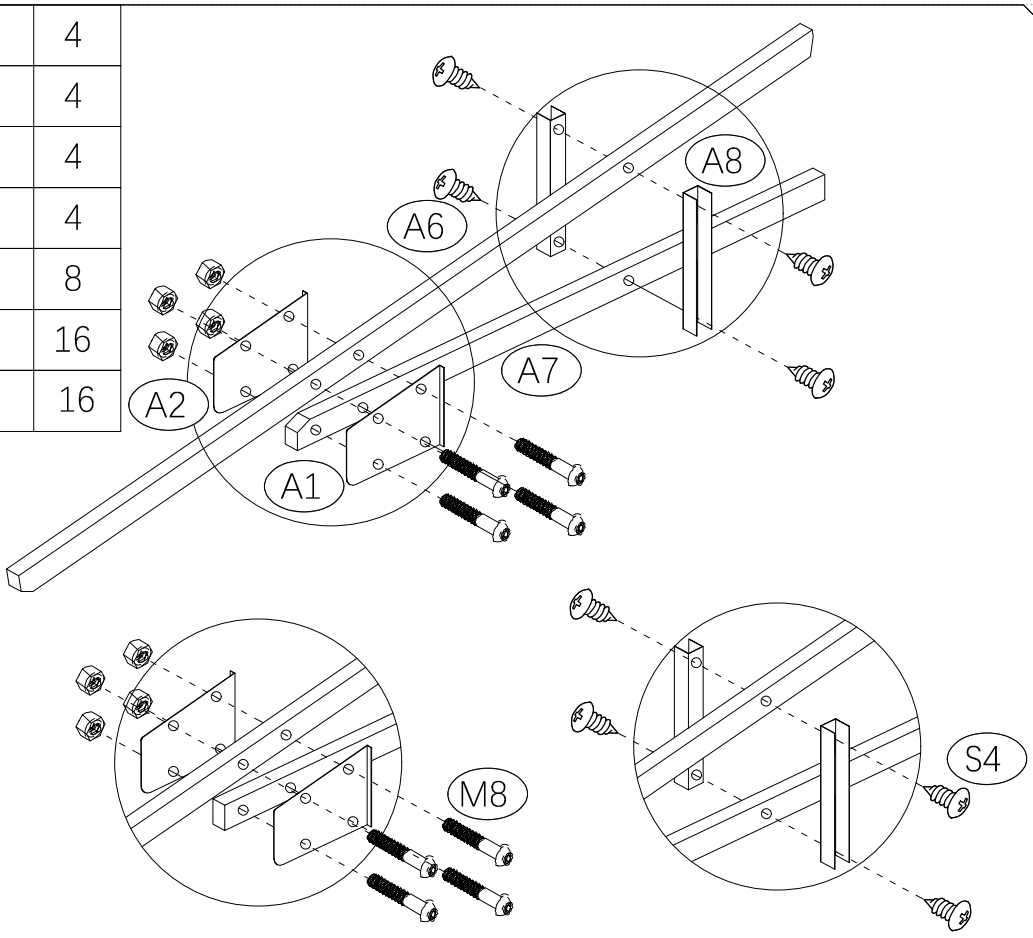
# Part 2 :

## Wall Installation



| | | |
|---|---|---|
| A1 | | 4 |
| A2 | | 4 |
| A6 | | 4 |
| A7 | | 4 |
| A8 | | 8 |
| M8 | | 16 |
| S4 | | 16 |

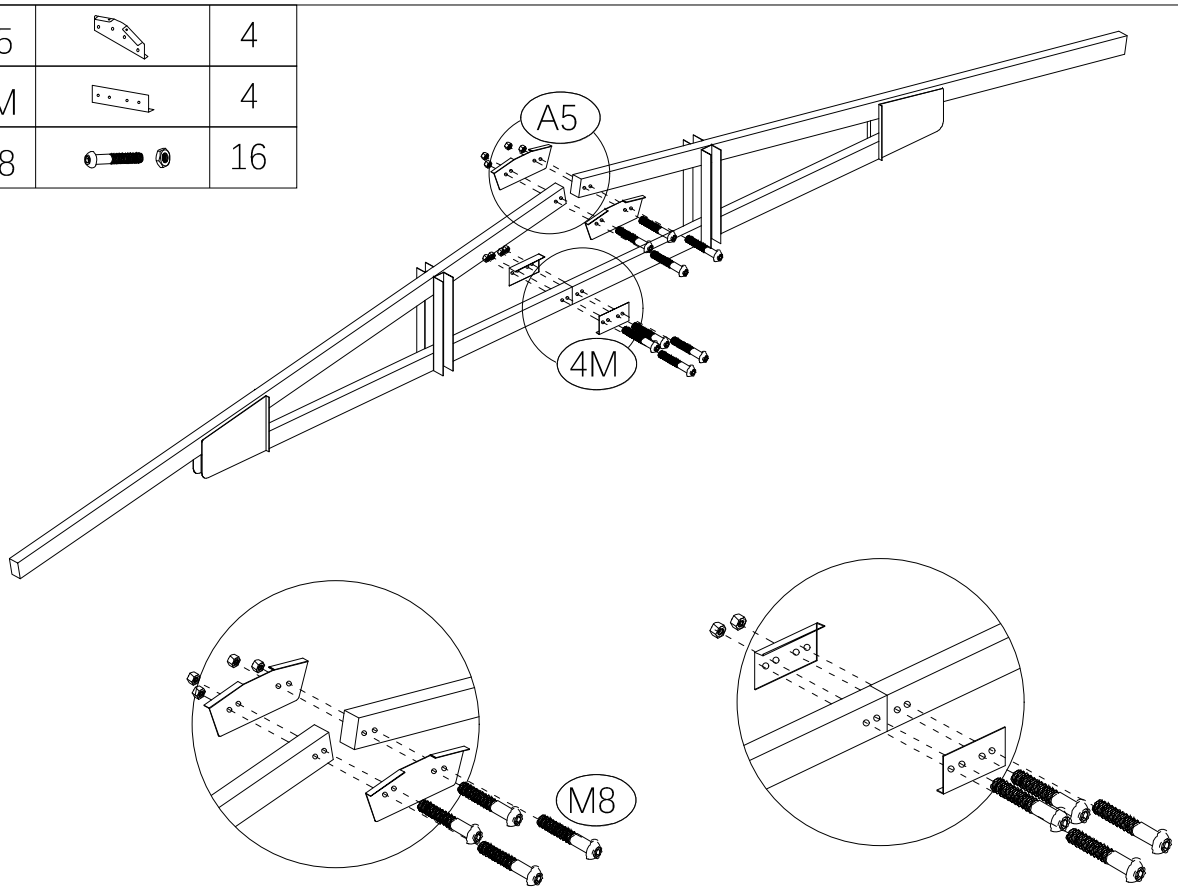
STEP 5




X4

| | | |
|---|---|---|
| A5 | | 4 |
| 4M | | 4 |
| M8 | | 16 |

STEP 6




X2

| | | |
|---|---|---|
| A3 |  | 4 |
| A4 |  | 4 |
| 5A |  | 4 |
| M8 |  | 16 |

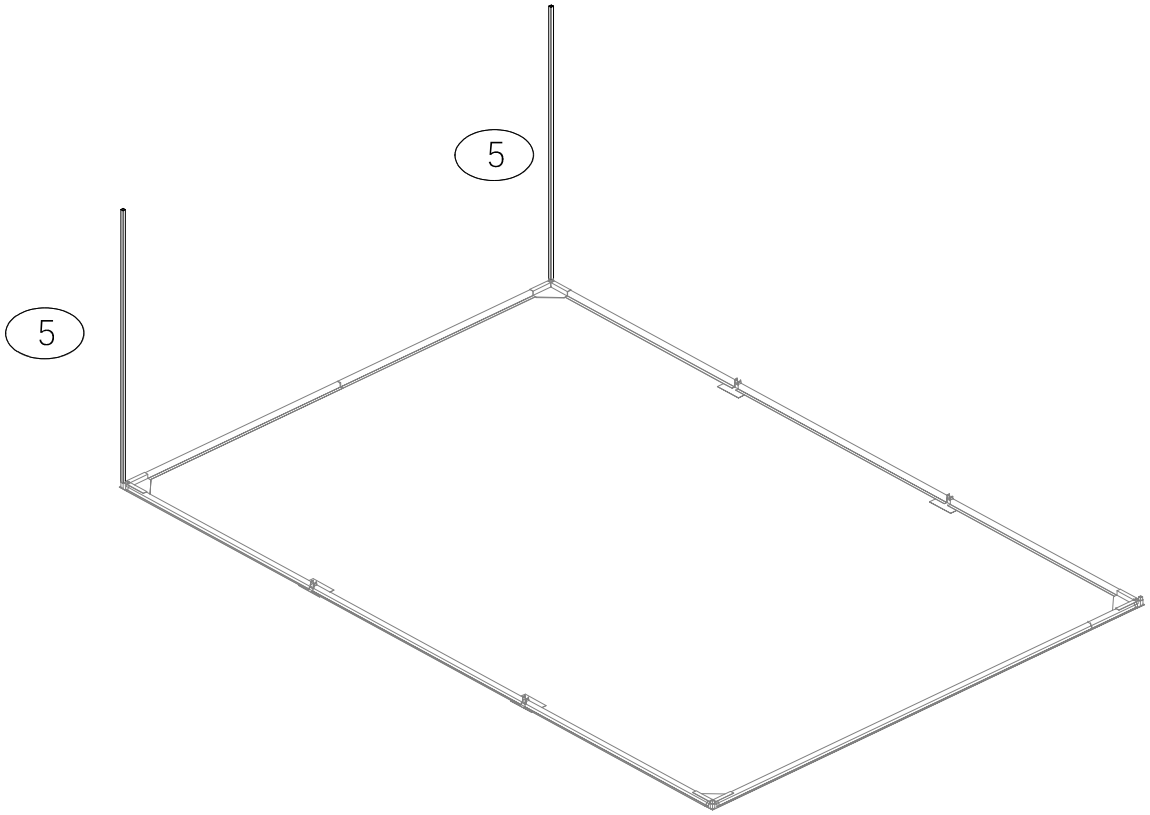
STEP 7




X2

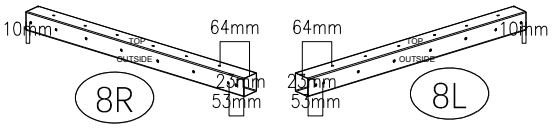
STEP 8

| | | |
|---|---|---|
| 5 |  | 2 |



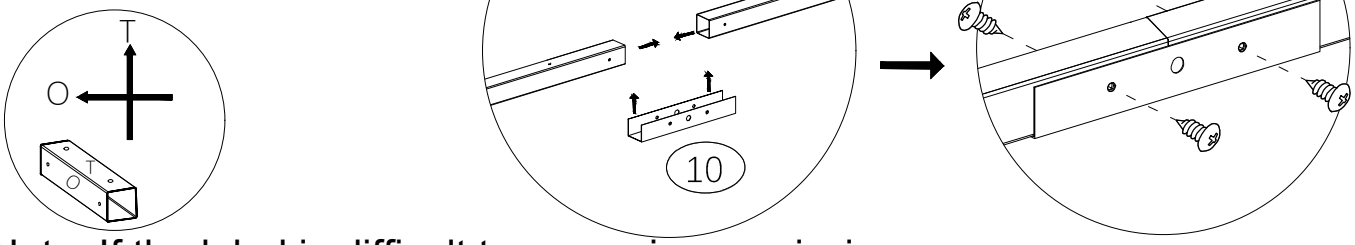

STEP 9

| | | |
|---|---|---|
| 8L |  | 1 |
| 8R |  | 1 |
| 10 |  | 1 |
| S4 |  | 4 |







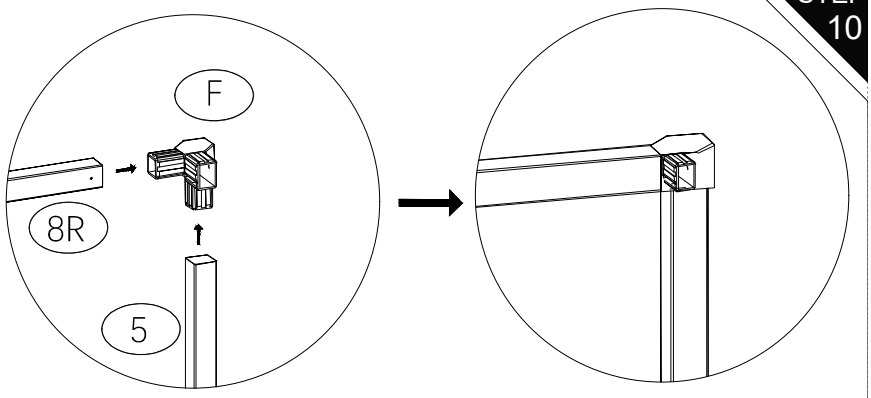


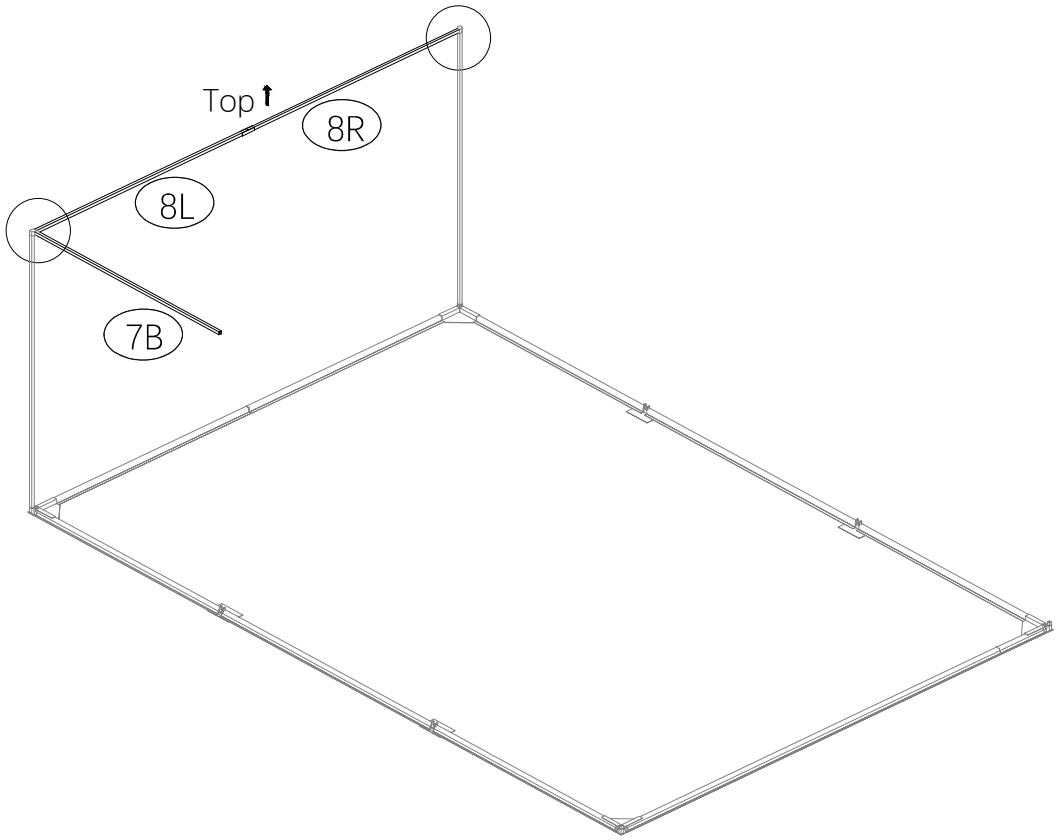

Note: If the label is difficult to recognize or missing, please refer to the hole positions indicated in the instruction manual for installation.

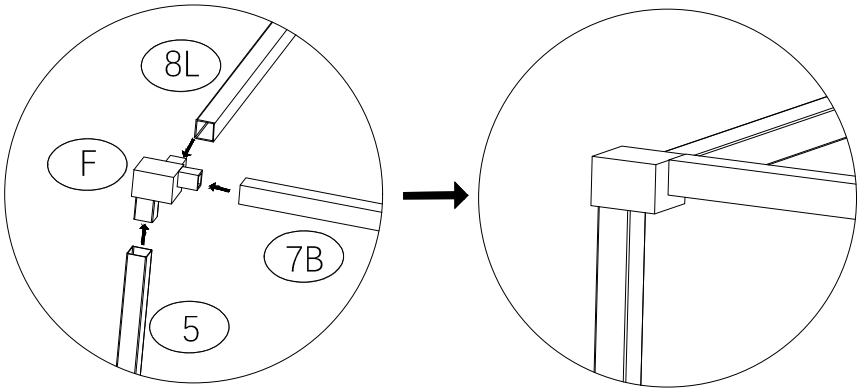
Note: The side with the TOP(T) label should face up, and the side with the OUTSIDE(O) label should face outward.

| | | |
|---|---|---|
| F | | 2 |
| 7B | | 1 |

STEP 10



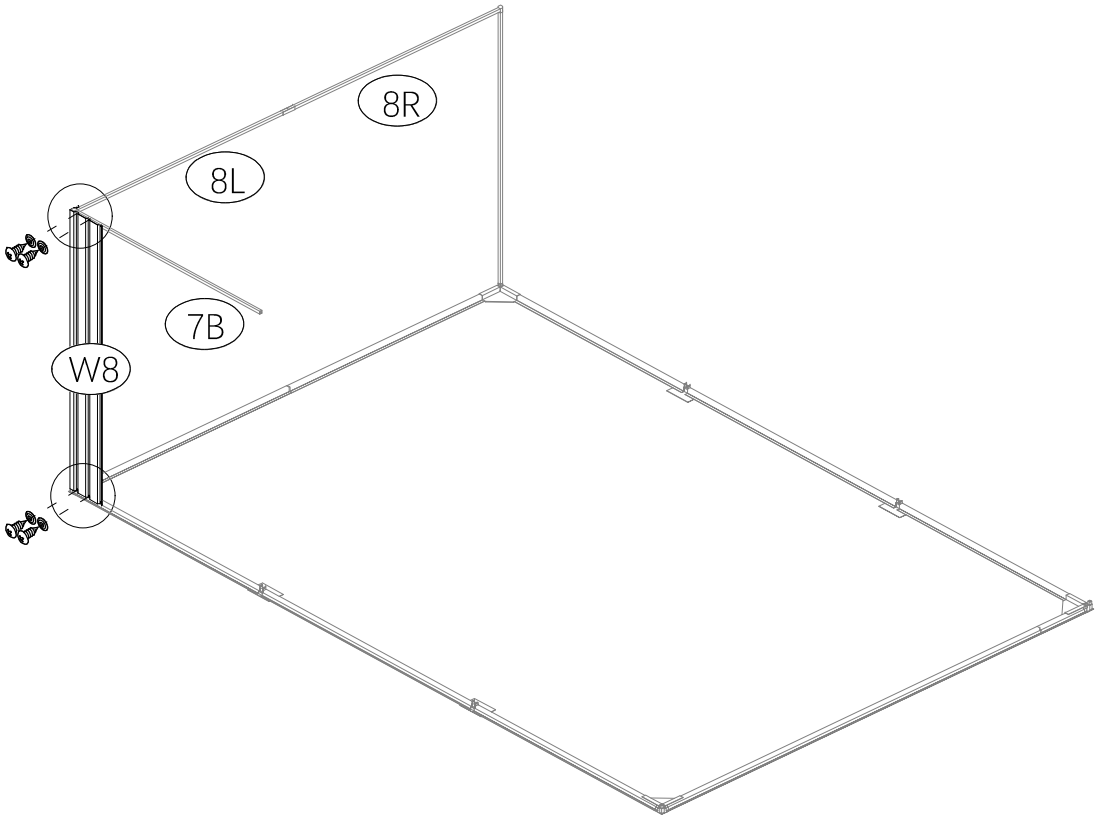



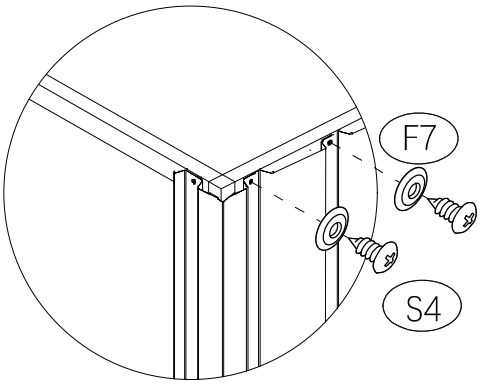



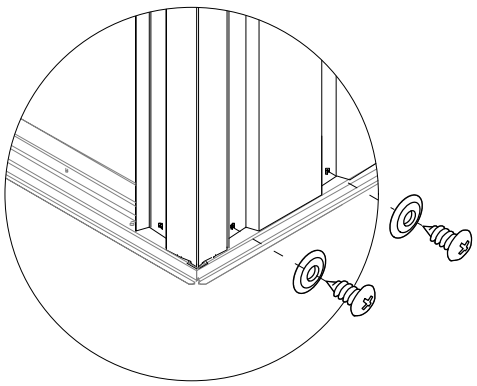

Note: The side with the TOP(T) label should face up,
and the side with the OUTSIDE(O) label should face outward.

STEP 11

| | | |
|---|---|---|
| W8 | | 1 |
| S4 | | 4 |
| F7 | | 4 |

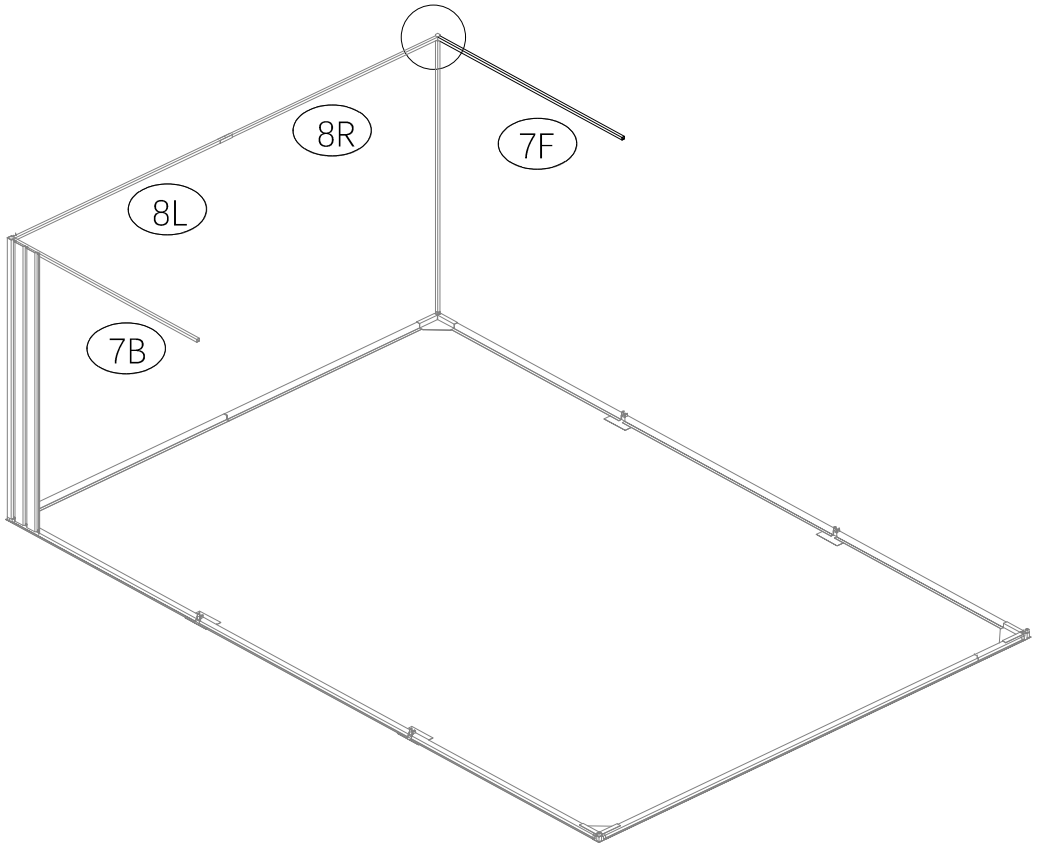


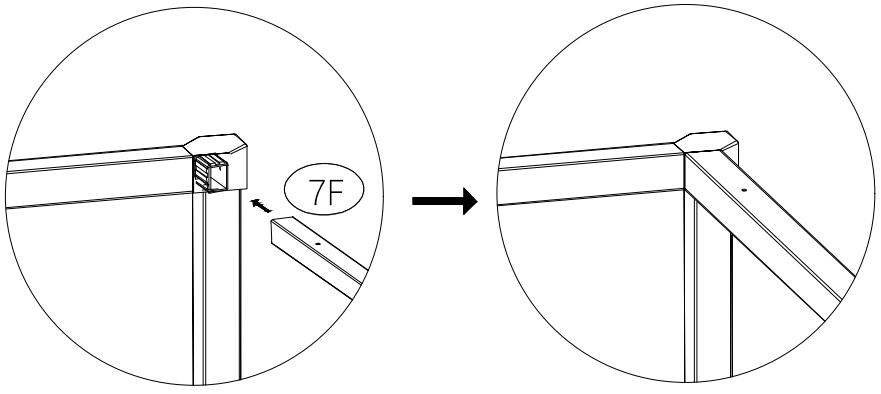



| 7F | | 1 |
|---|---|---|

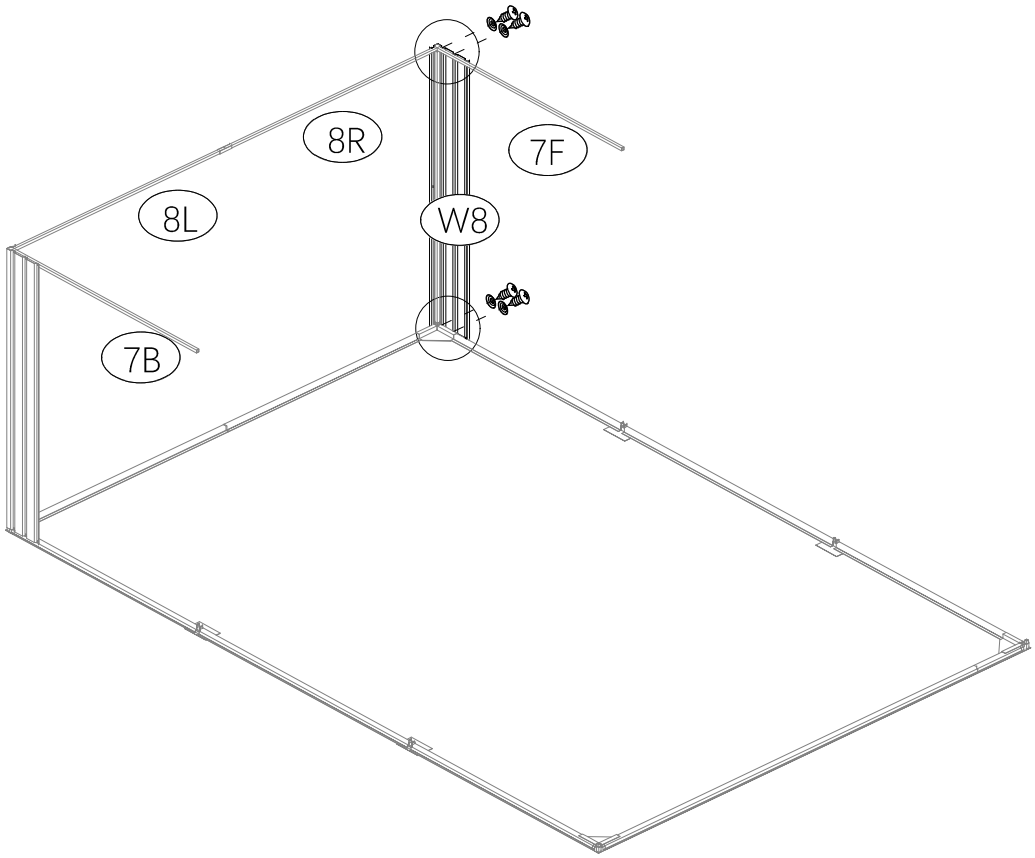
STEP 12

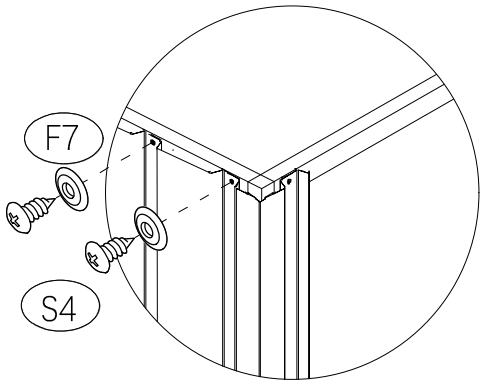


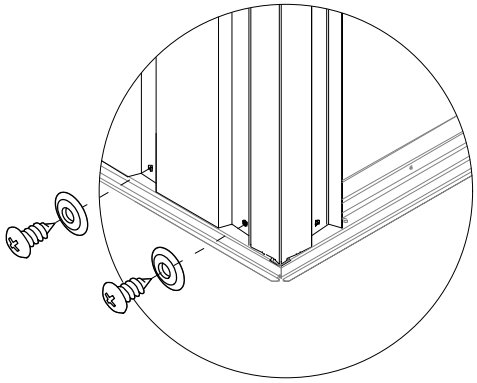



| | | |
|---|---|---|
| W8 | | 1 |
| S4 | | 4 |
| F7 | | 4 |

STEP 13

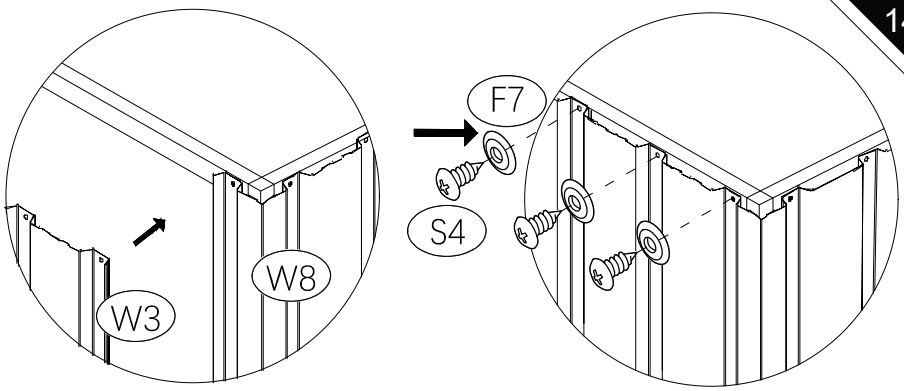


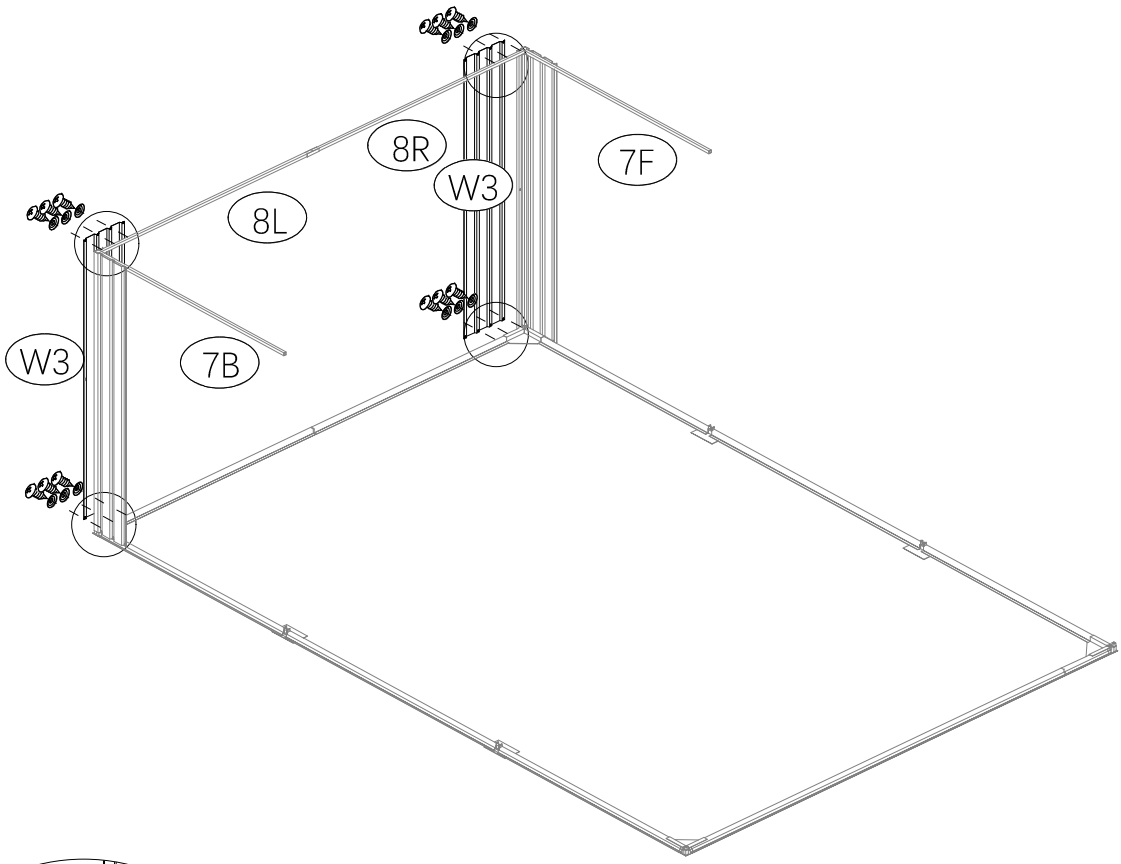



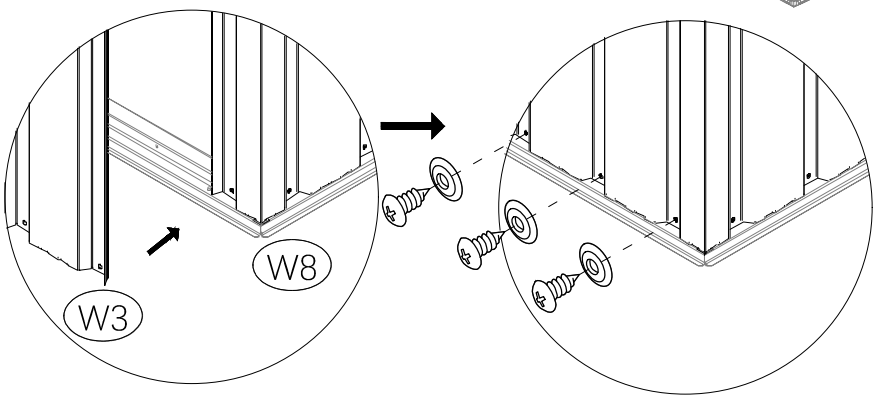



| | | |
|---|---|---|
| W3 |  | 2 |
| S4 |  | 12 |
| F7 |  | 12 |

STEP 14

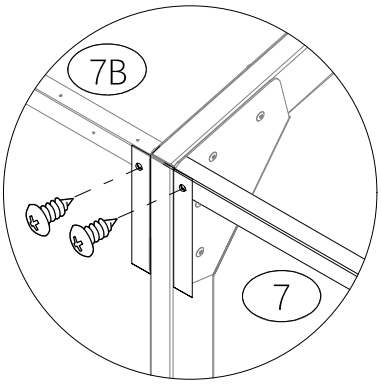


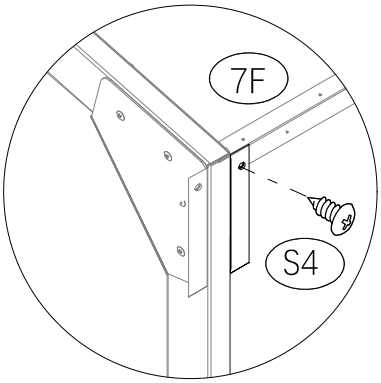



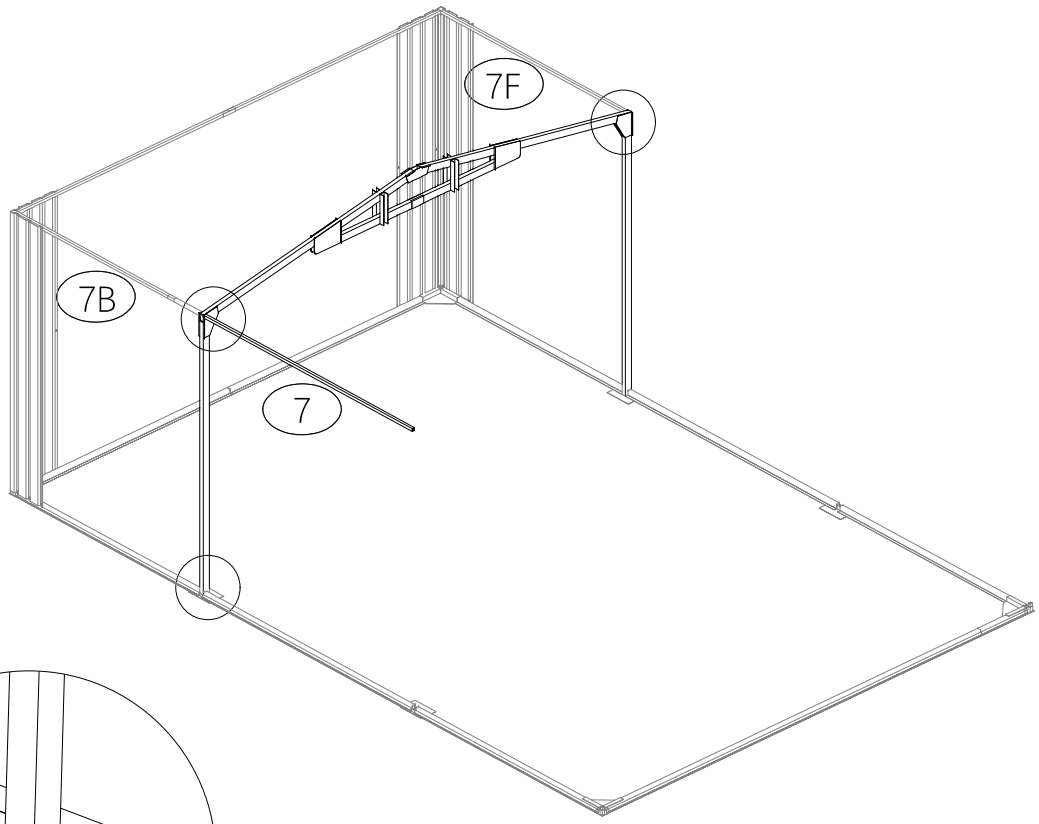



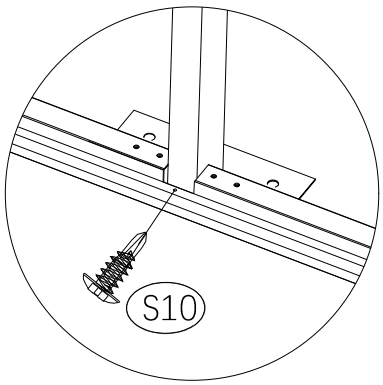
STEP 15

| | | |
|---|---|---|
| 7 |  | 1 |
| S4 |  | 3 |
| S10 |  | 2 |

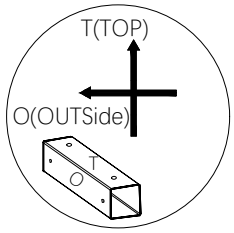


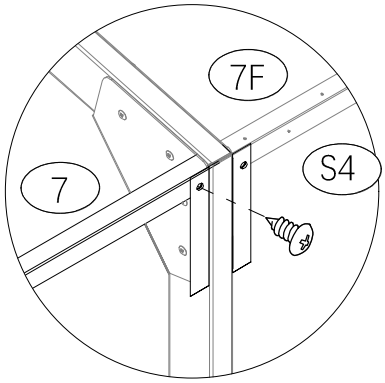



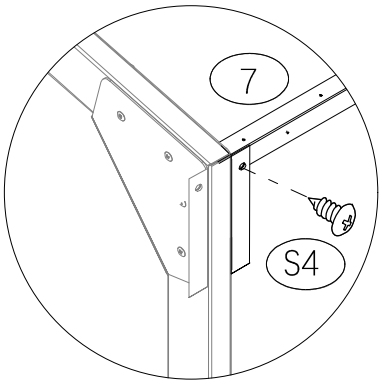

Note: The side with the TOP(T) label should face up,
and the side with the OUTSIDE(O) label should face outward.
During installation, ensure that square tube 7 is flush with the top of the connecting component.

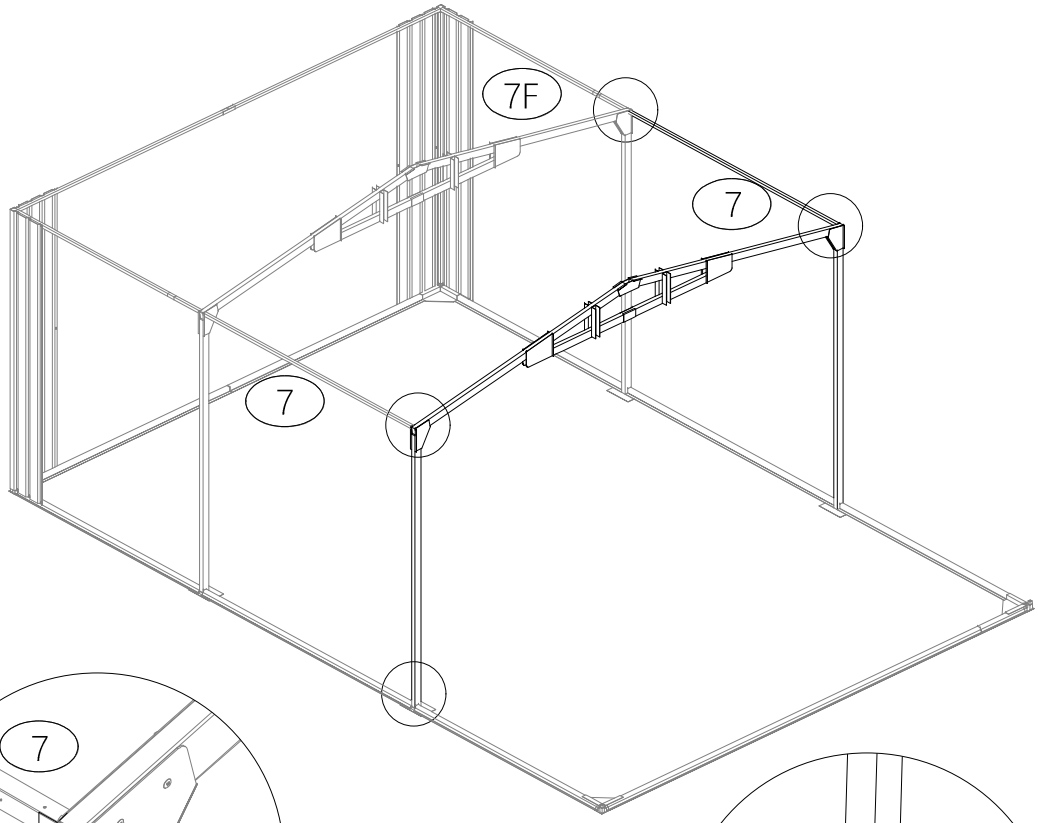


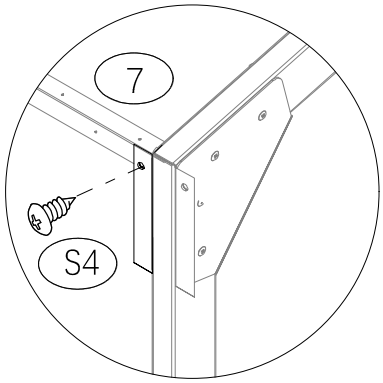
STEP 16

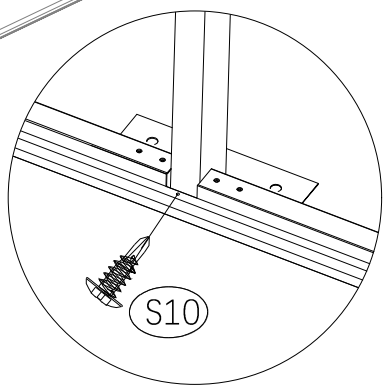
| | | |
|---|---|---|
| 7 |  | 1 |
| S4 |  | 3 |
| S10 |  | 2 |



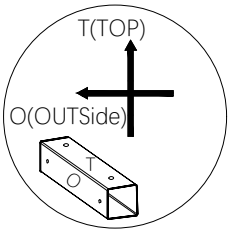



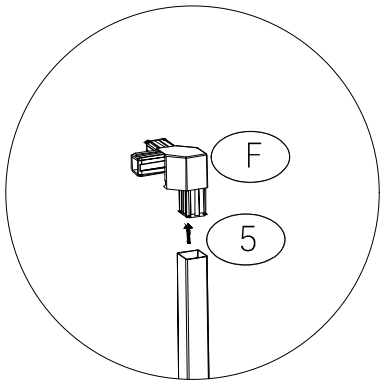



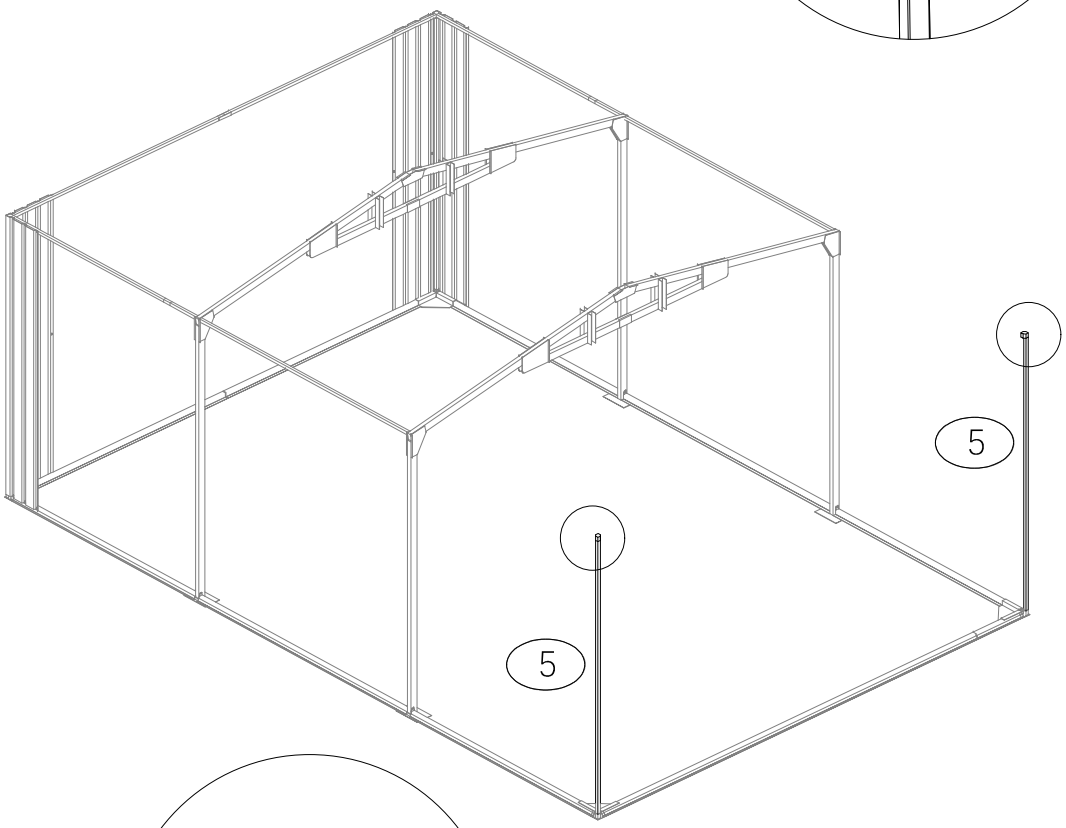

Note: The side with the TOP(T) label should face up,
and the side with the OUTSIDE(O) label should face outward.
During installation, ensure that square tube 7 is flush with the top of the connecting component.

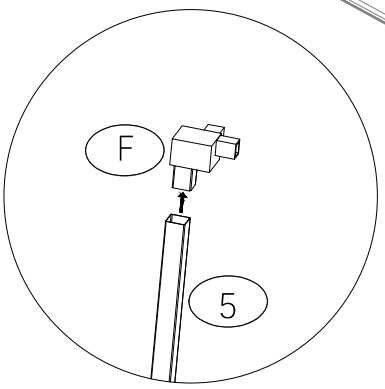


| | | |
|---|---|---|
| 5 | | 2 |
| F | | 2 |

STEP 17

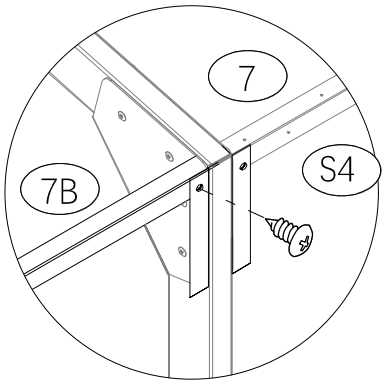


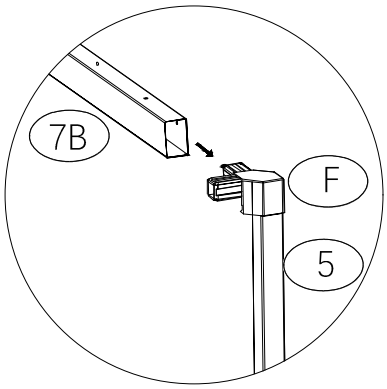



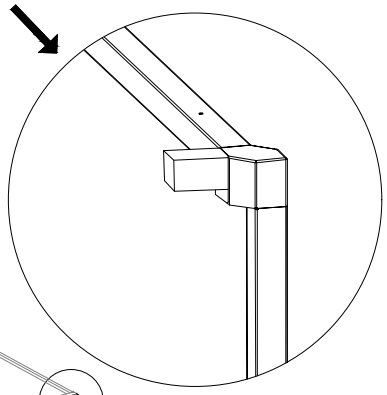



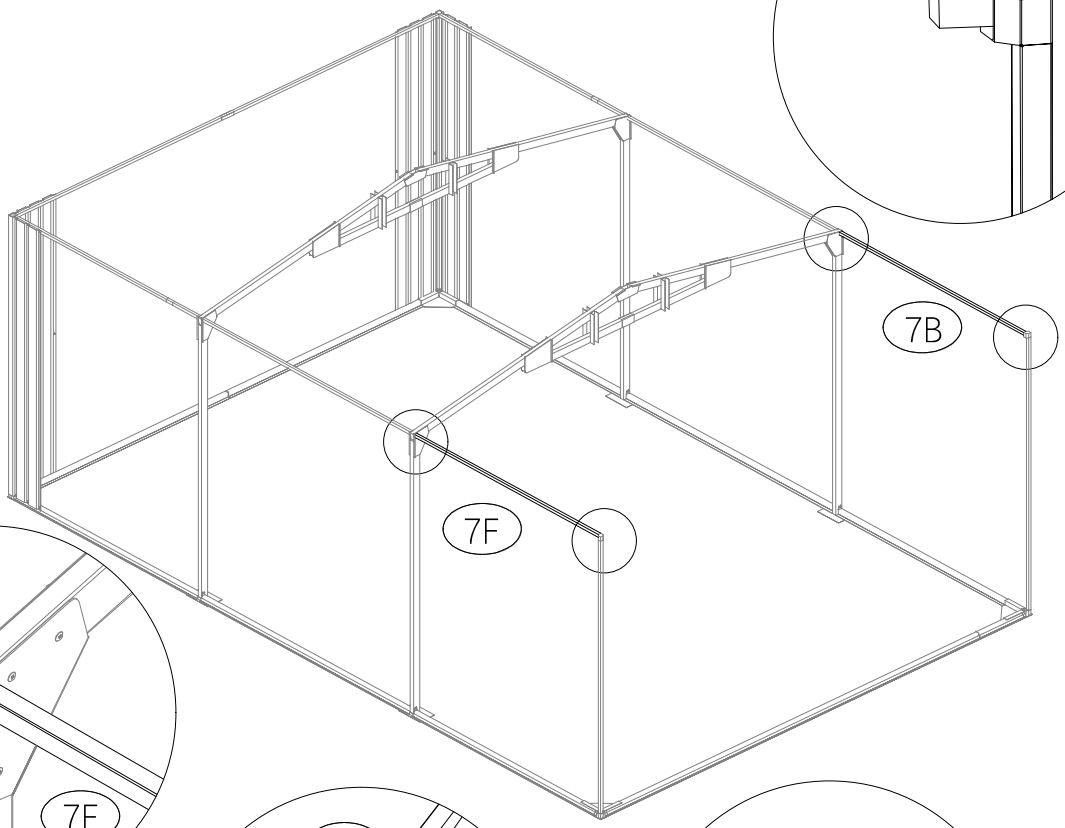
| | | |
|---|---|---|
| 7B | | 1 |
| 7F | | 1 |
| S4 | | 2 |

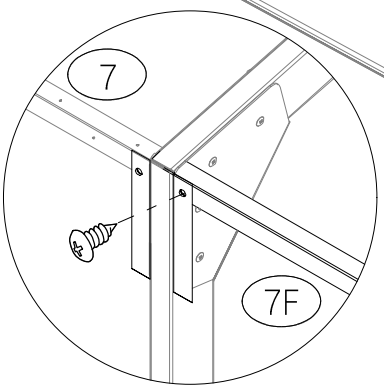
STEP 18

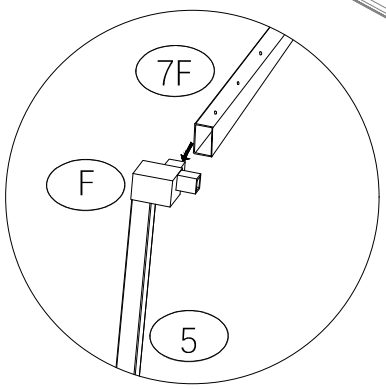


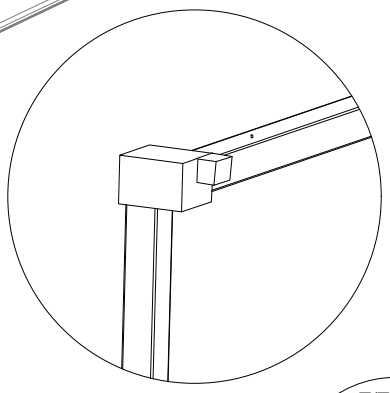



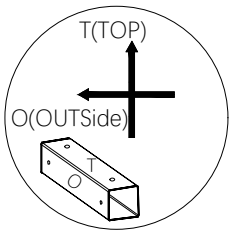


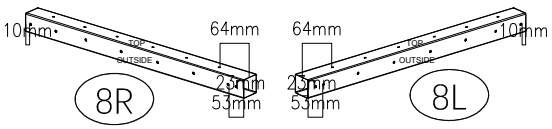



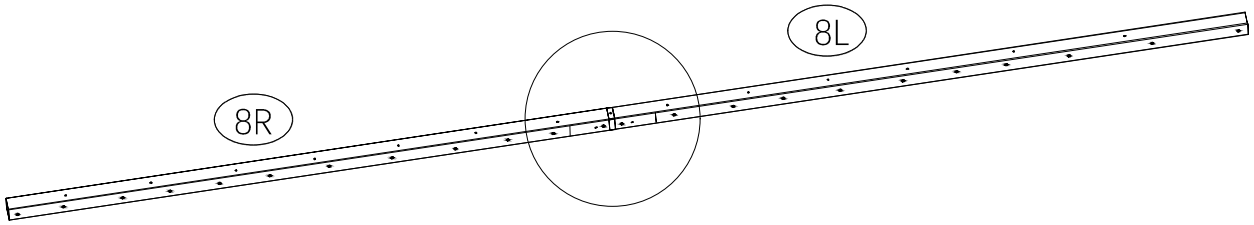
Note: The side with the TOP(T) label should face up,
and the side with the OUTSIDE(O) label should face outward.
During installation, ensure that square tube 7 is flush with the top of the connecting component.

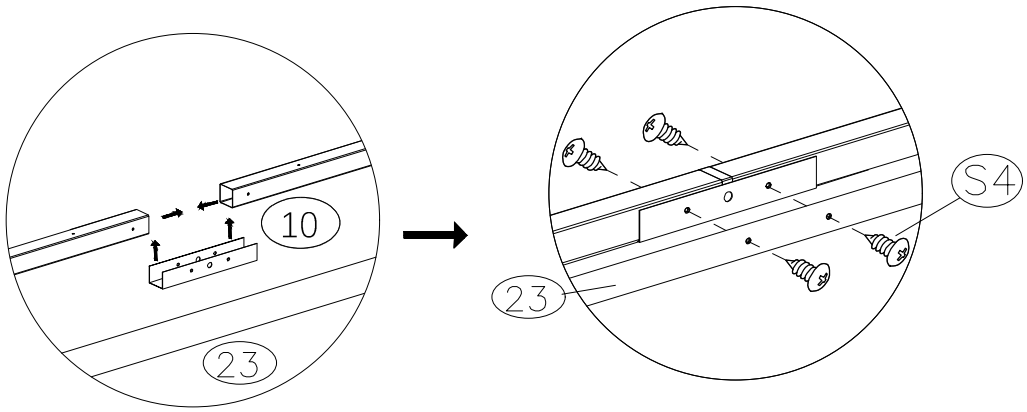


STEP 19

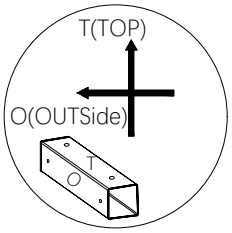
| | | |
|---|---|---|
| 8L | | 1 |
| 8R | | 1 |
| 10 | | 1 |
| S4 | | 4 |
| 23 | | 1 |



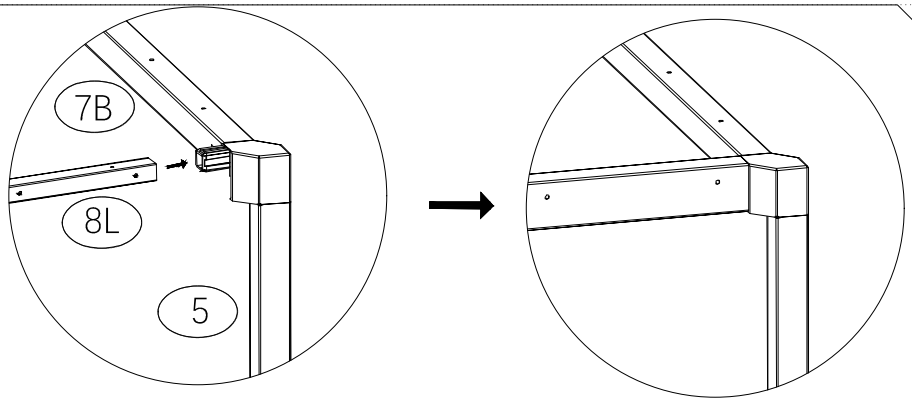



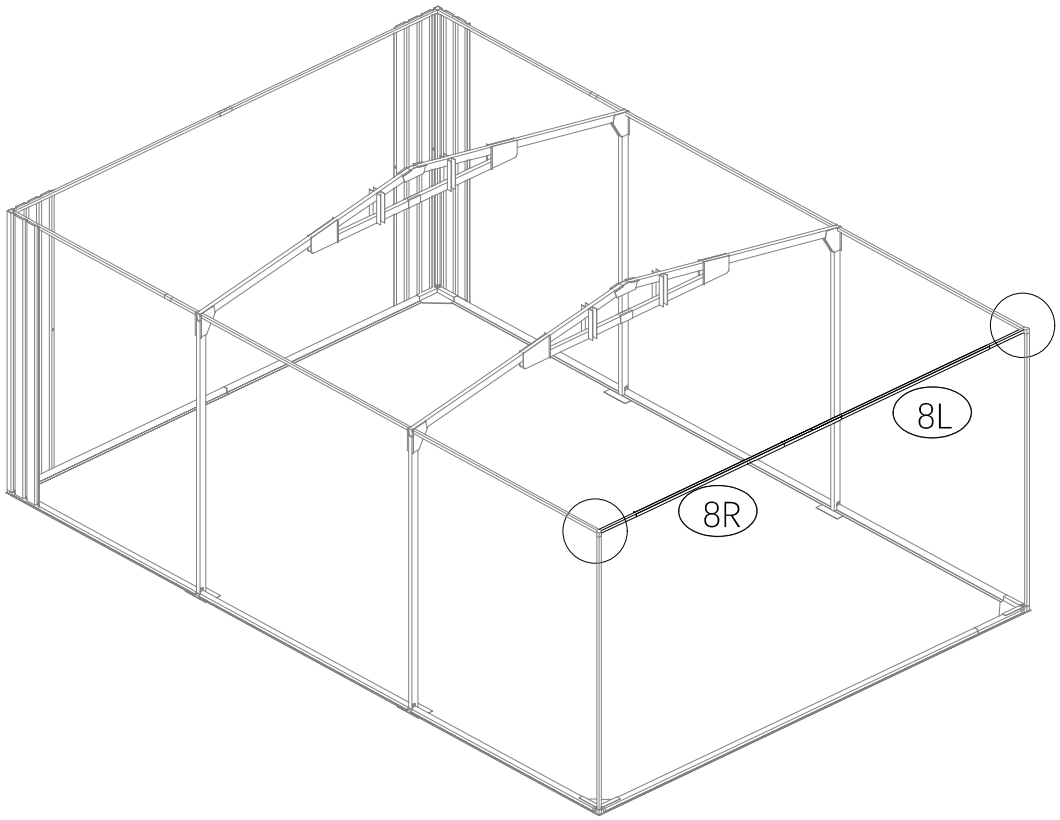



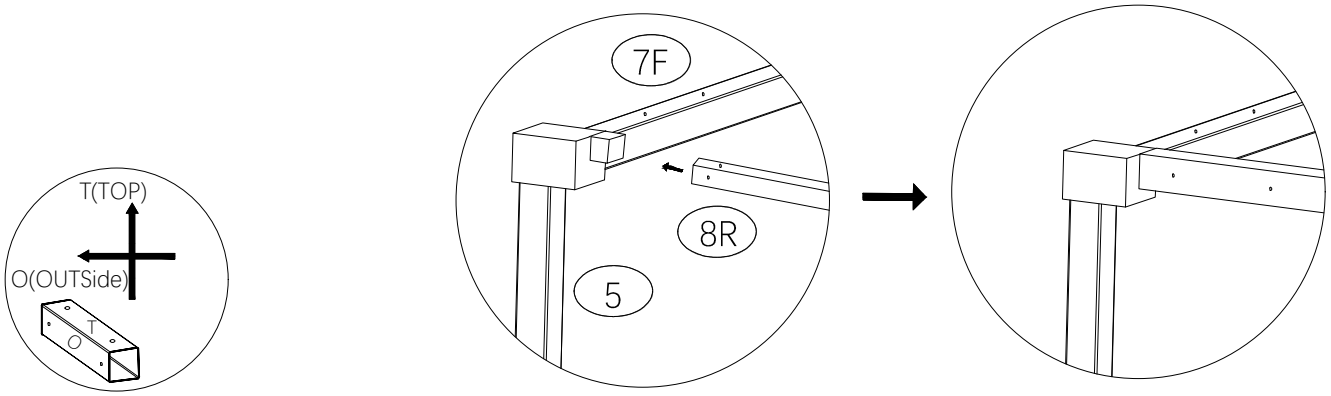

Note: If the label is difficult to recognize or missing, please refer to the hole positions indicated in the instruction manual for installation.
Note: The side with the TOP(T) label should face up, and the side with the OUTSIDE(O) label should face outward.



STEP 20



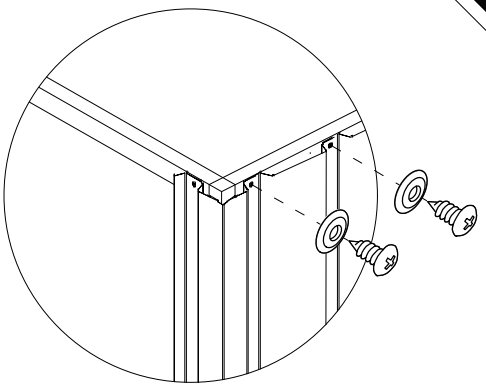



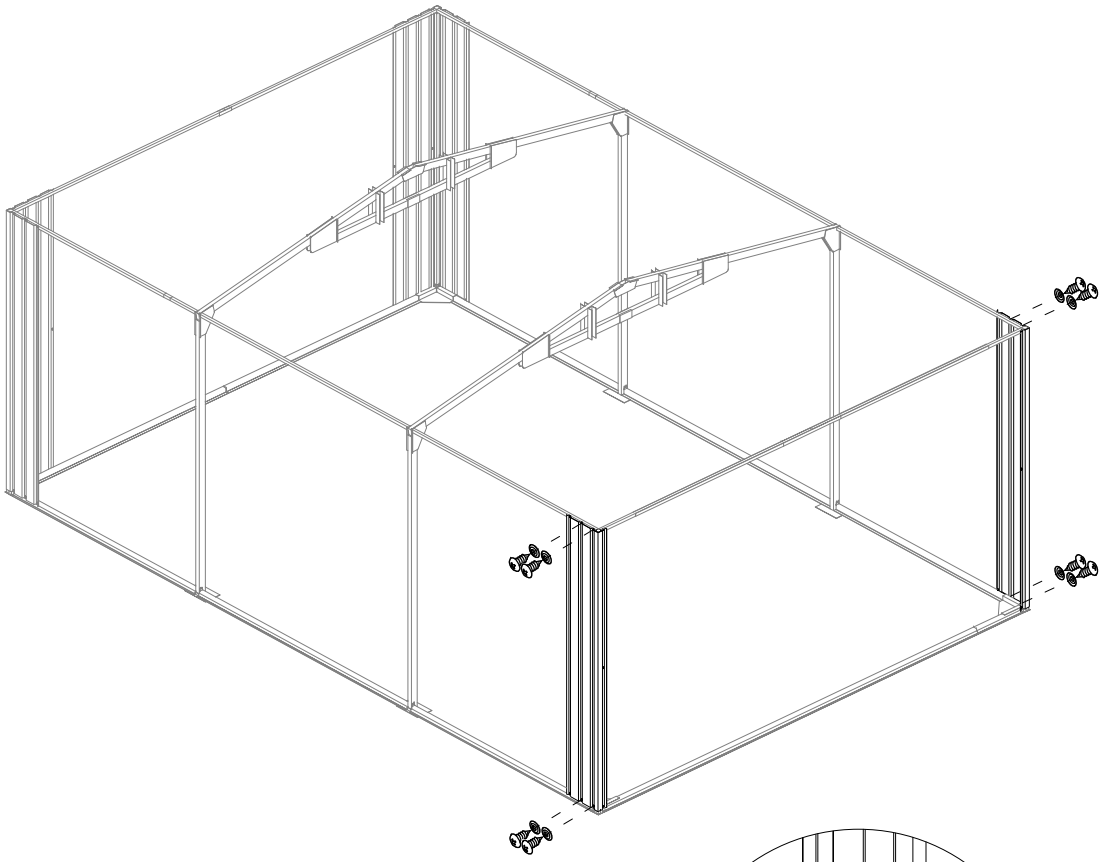



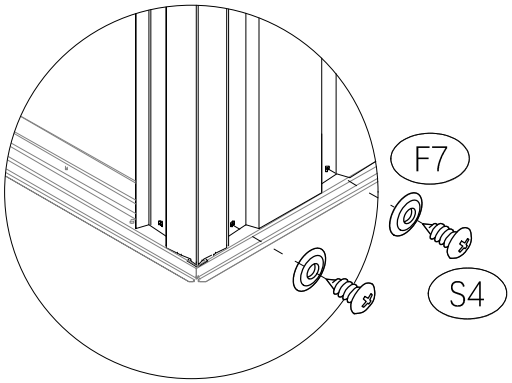

Note: The side with the TOP(T) label should face up,
and the side with the OUTSIDE(O) label should face outward.

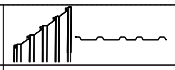
| | | |
|---|---|---|
| W8 | | 2 |
| S4 | | 8 |
| F7 | | 8 |

STEP 21

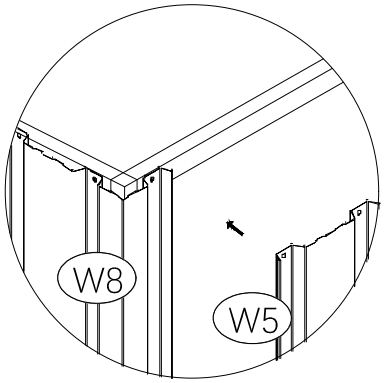


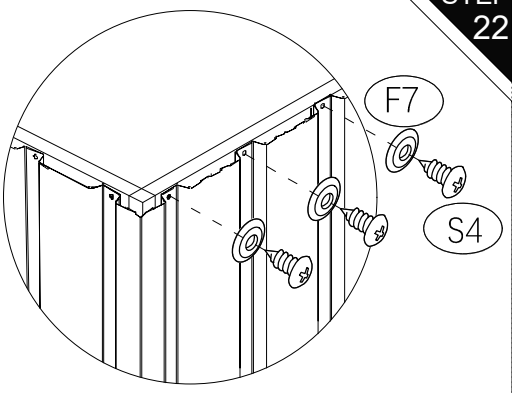


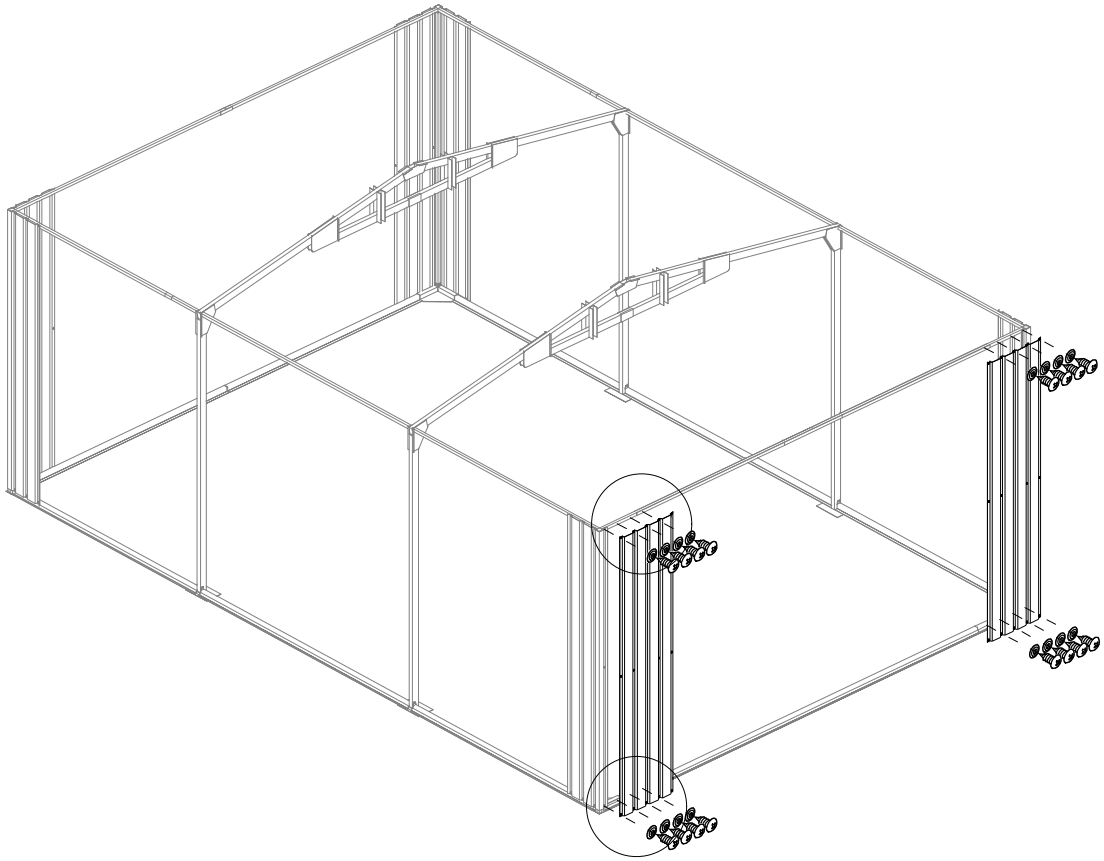


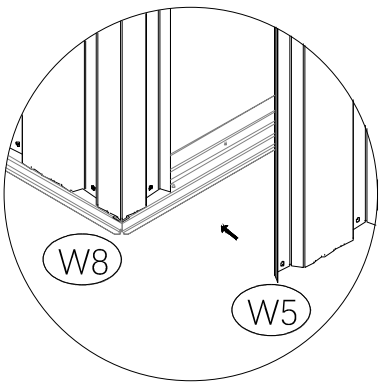
| | | |
|---|---|---|
| W5 |  | 2 |
| S4 |  | 16 |
| F7 |  | 16 |

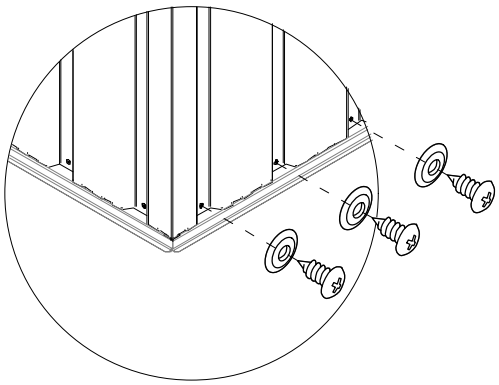
STEP 22

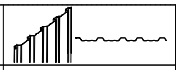


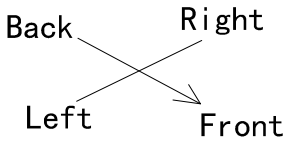



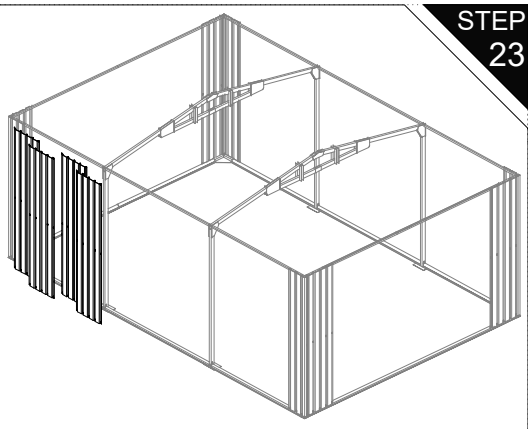


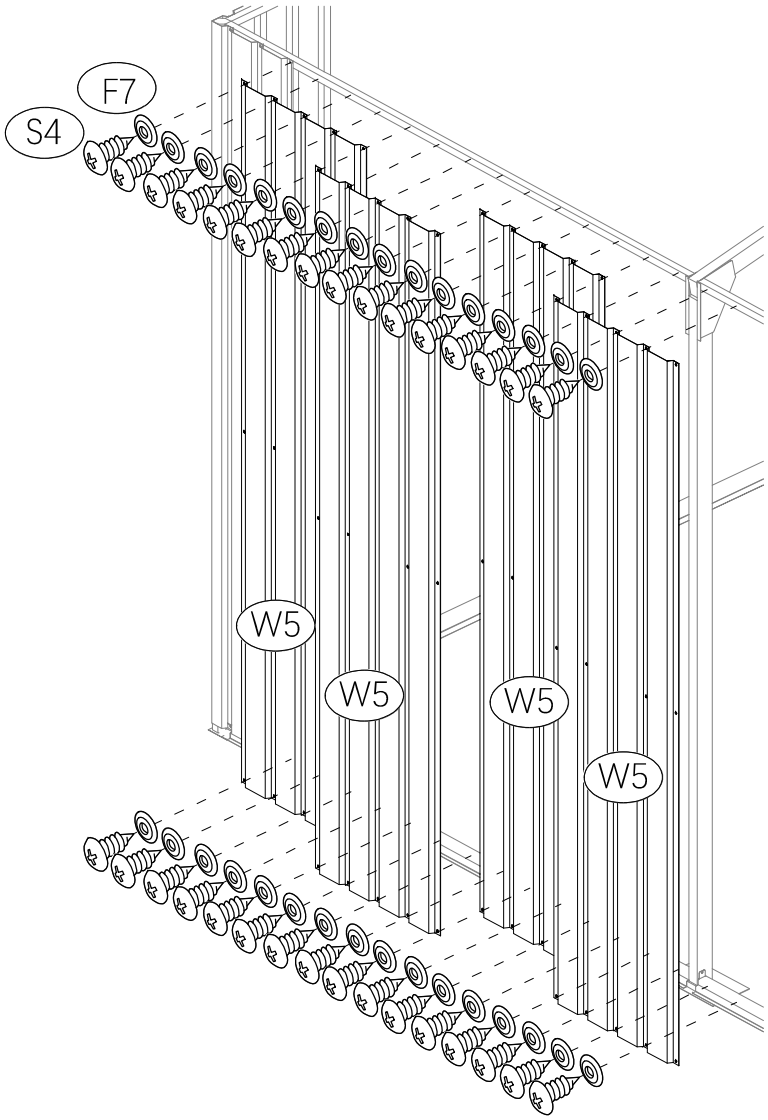



| | | |
|---|---|---|
| W5 |  | 4 |
| S4 |  | 32 |
| F7 |  | 32 |



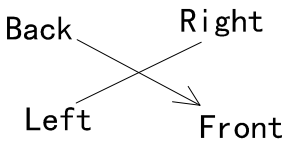

STEP 23

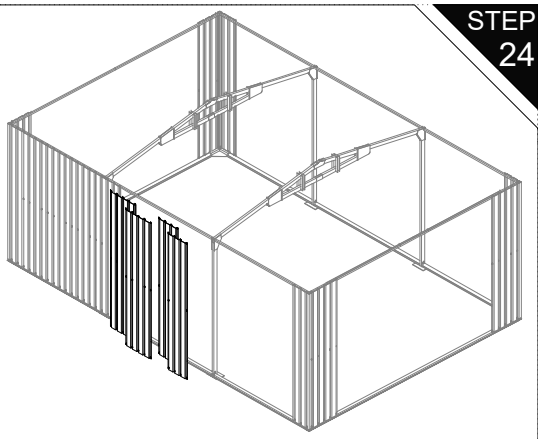




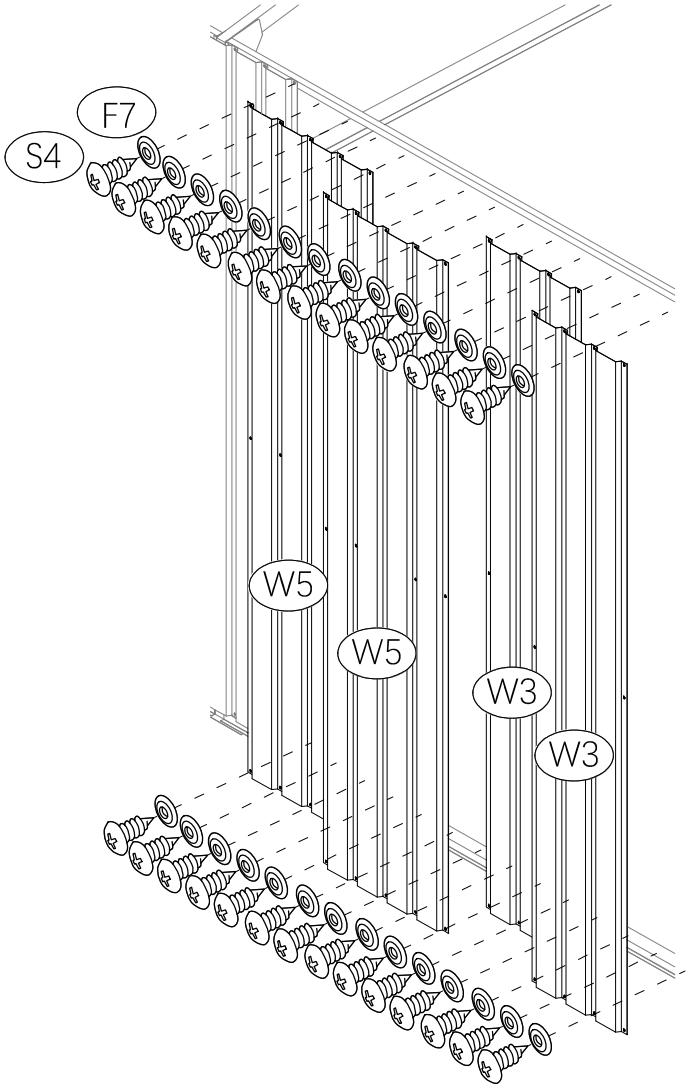

Note: When assembling difficult parts with screws S4, use screws S10 as alternatives

| | | |
|---|---|---|
| W3 | | 2 |
| W5 | | 2 |
| S4 | | 28 |
| F7 | | 28 |



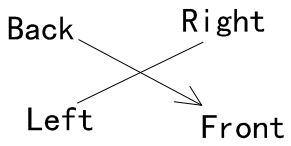



STEP 24

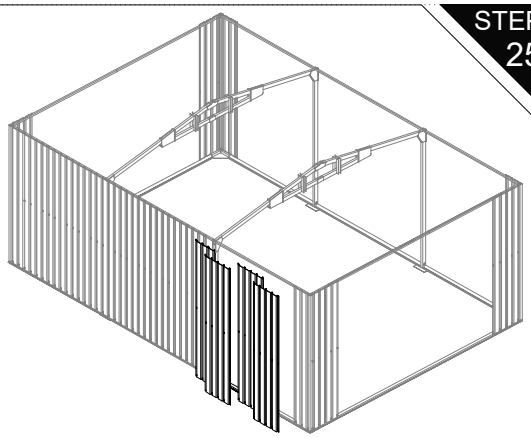


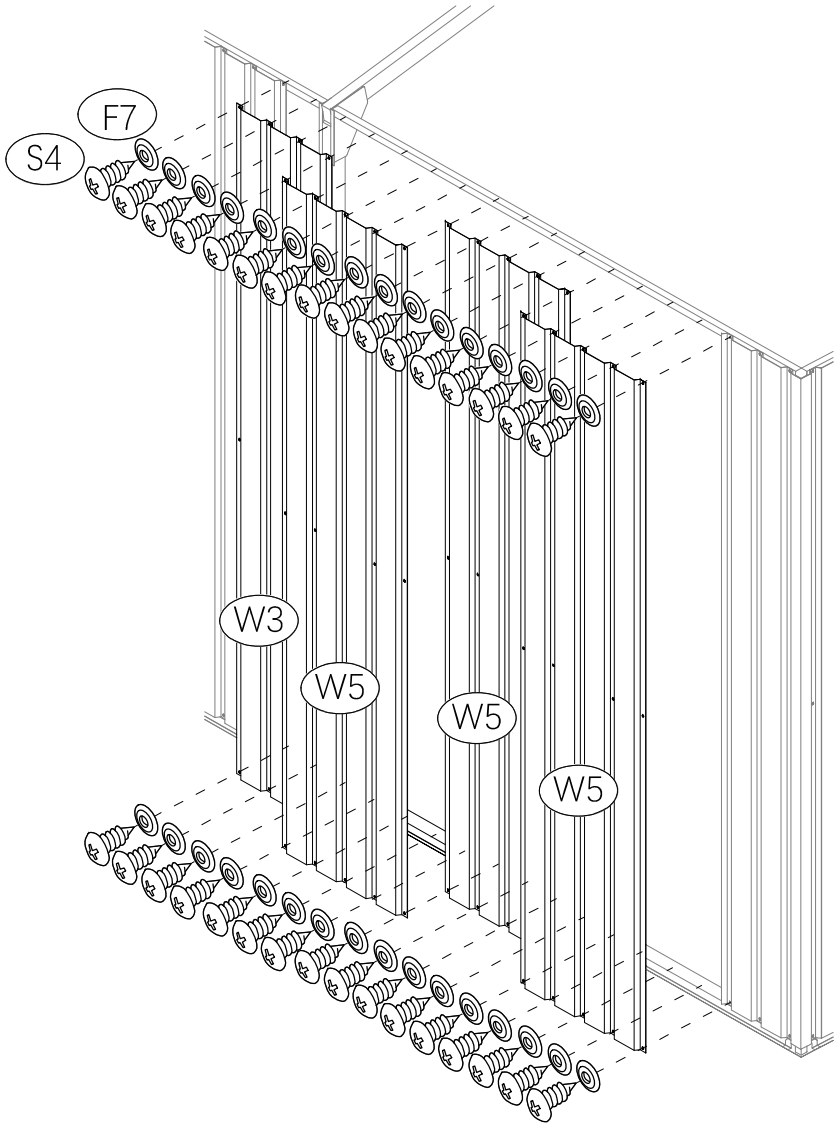

Note: When assembling difficult parts with screws S4, use screws S10 as alternatives

| | | |
|---|---|---|
| W3 | | 1 |
| W5 | | 3 |
| S4 | | 32 |
| F7 | | 32 |

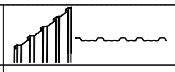


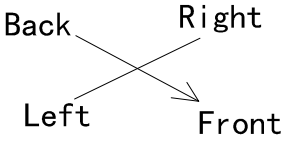


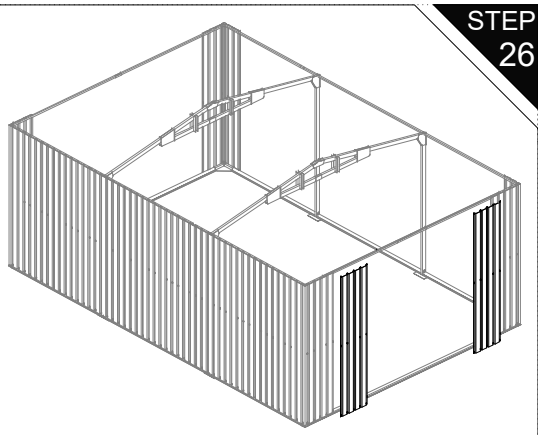


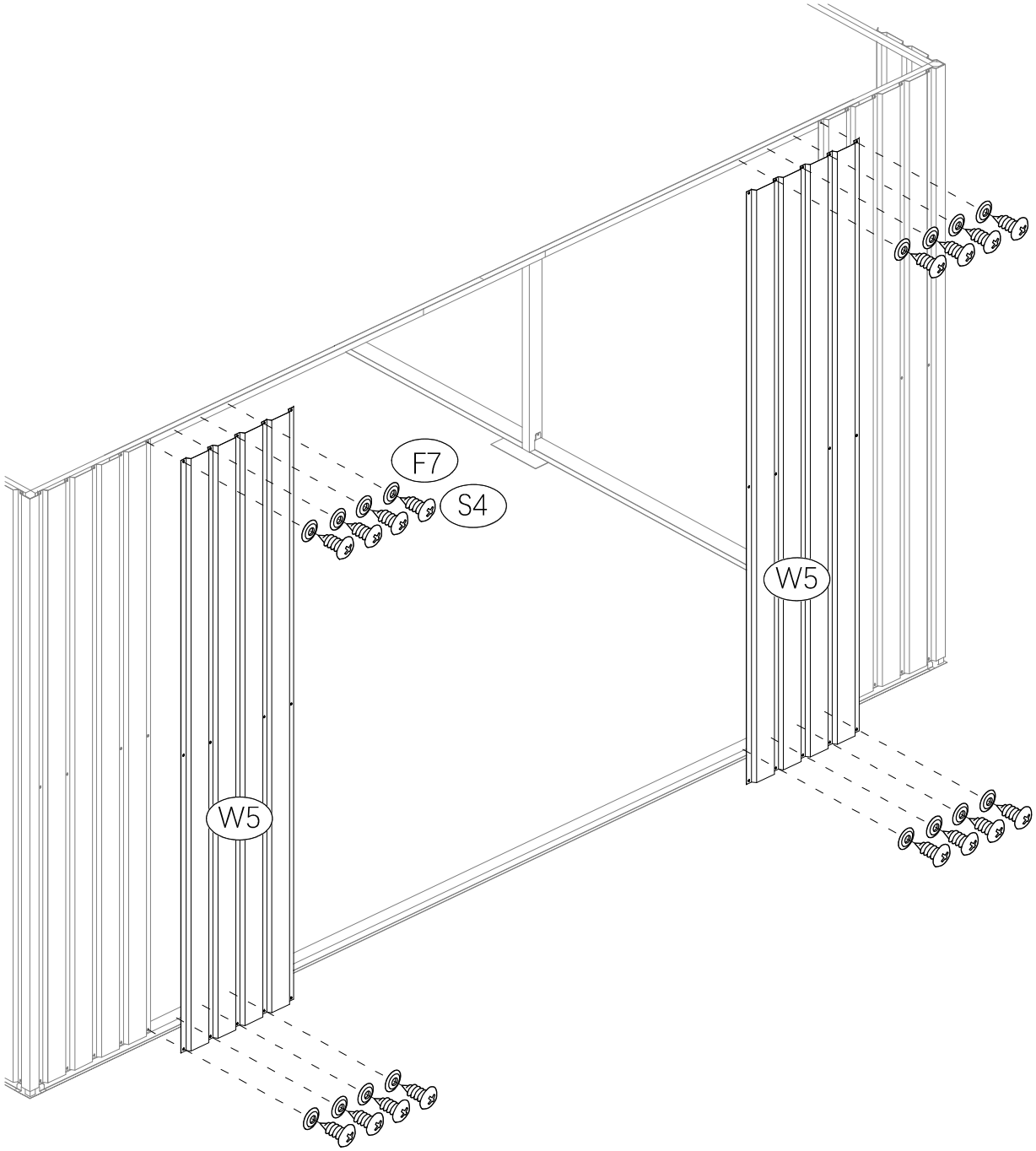

Note: When assembling difficult parts with screws S4, use screws S10 as alternatives

| | | |
|---|---|---|
| W5 |  | 2 |
| S4 |  | 16 |
| F7 |  | 16 |



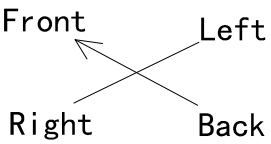

STEP 26



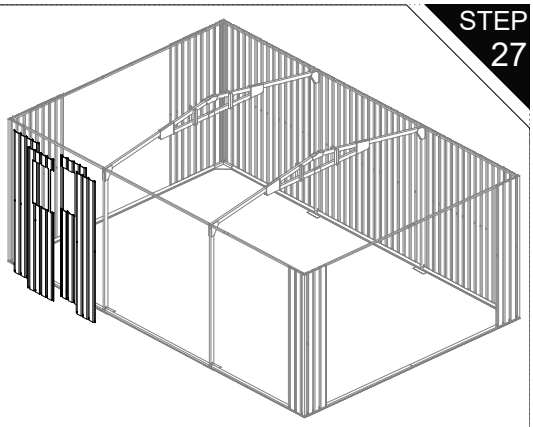


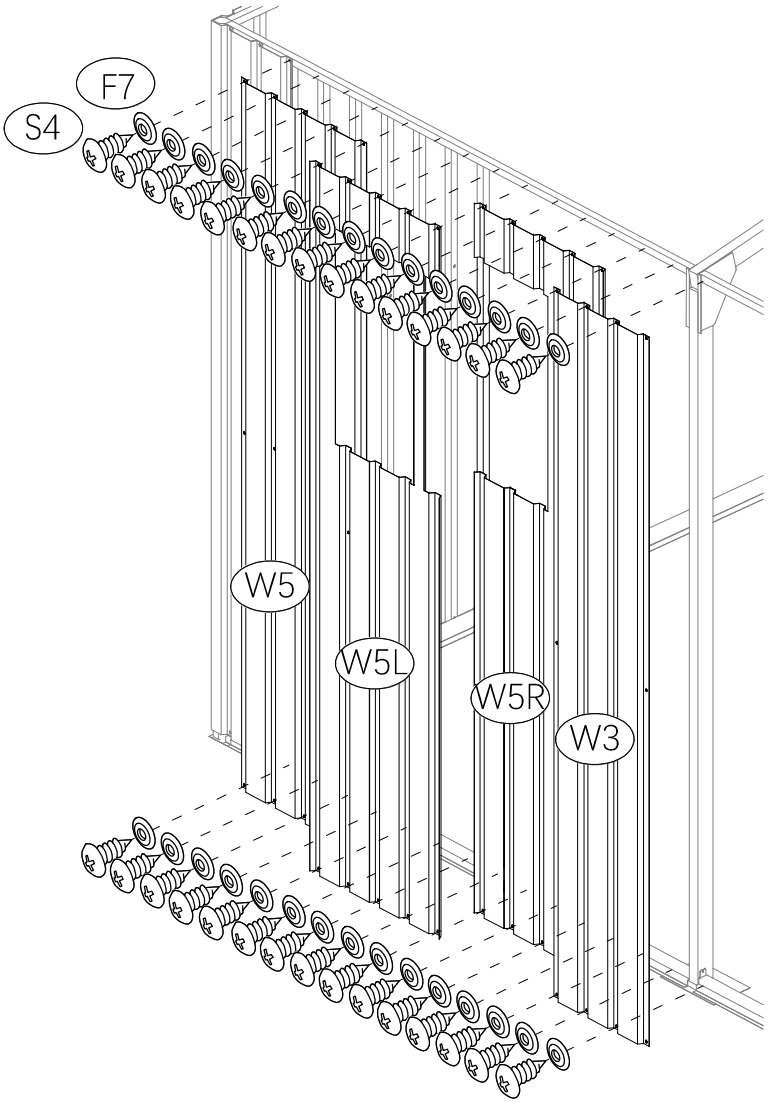

Note: When assembling difficult parts with screws S4, use screws S10 as alternatives

| | | |
|---|---|---|
| W3 | | 1 |
| W5L | | 1 |
| W5R | | 1 |
| W5 | | 1 |
| S4 | | 30 |
| F7 | | 30 |



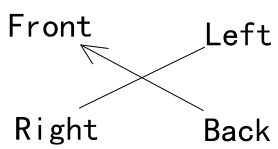


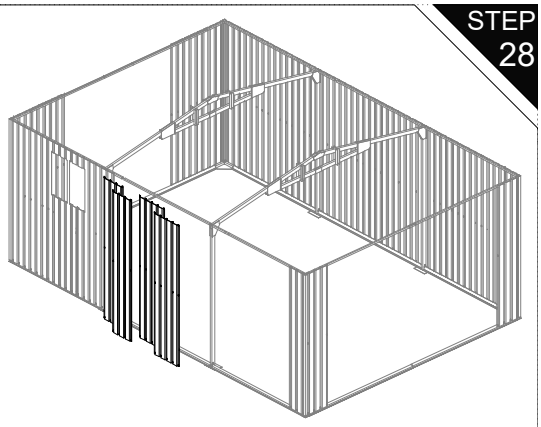





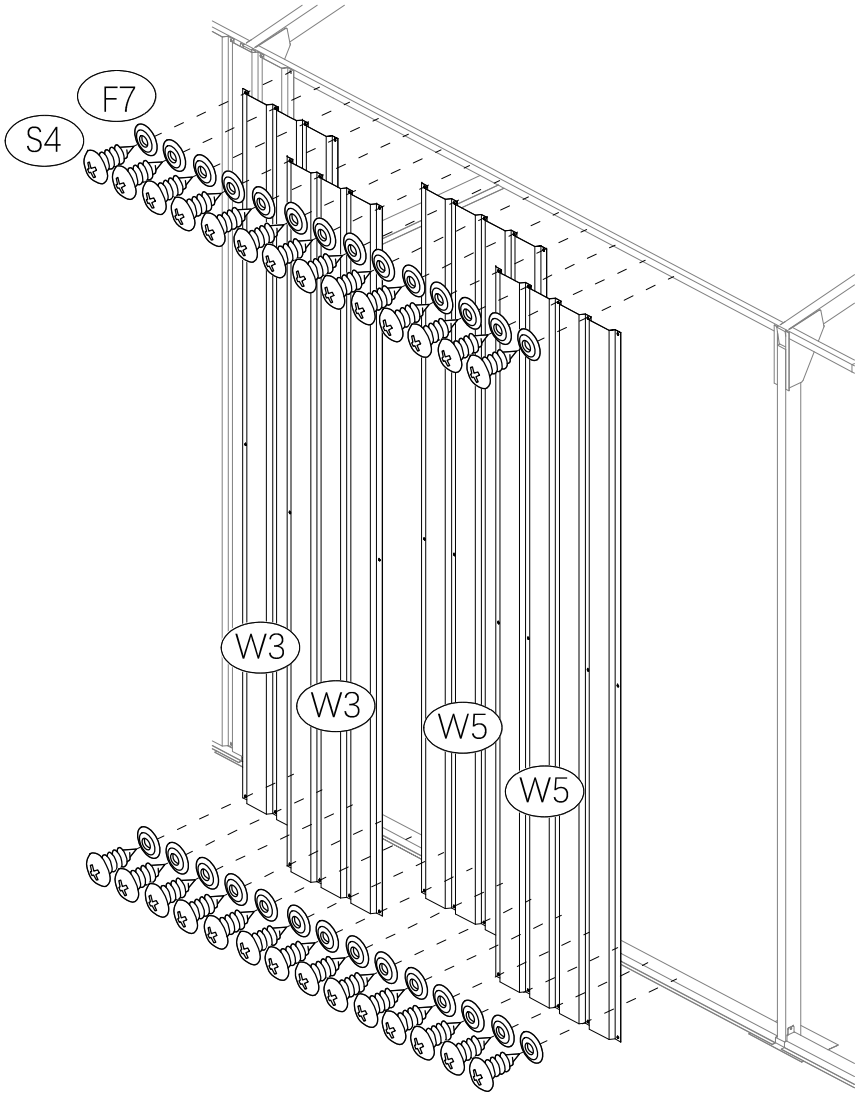

Note: When assembling difficult parts with screws S4, use screws S10 as alternatives

| | | |
|---|---|---|
| W3 | | 2 |
| W5 | | 2 |
| S4 | | 28 |
| F7 | | 28 |



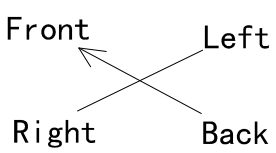



STEP 28

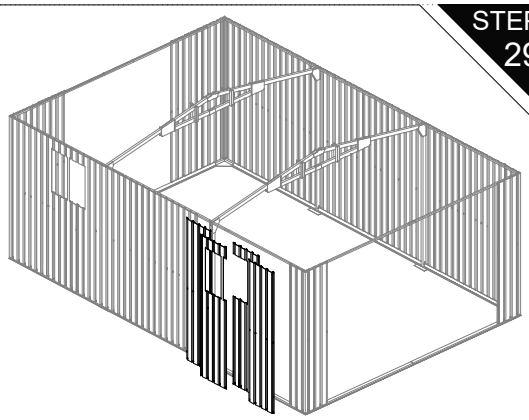


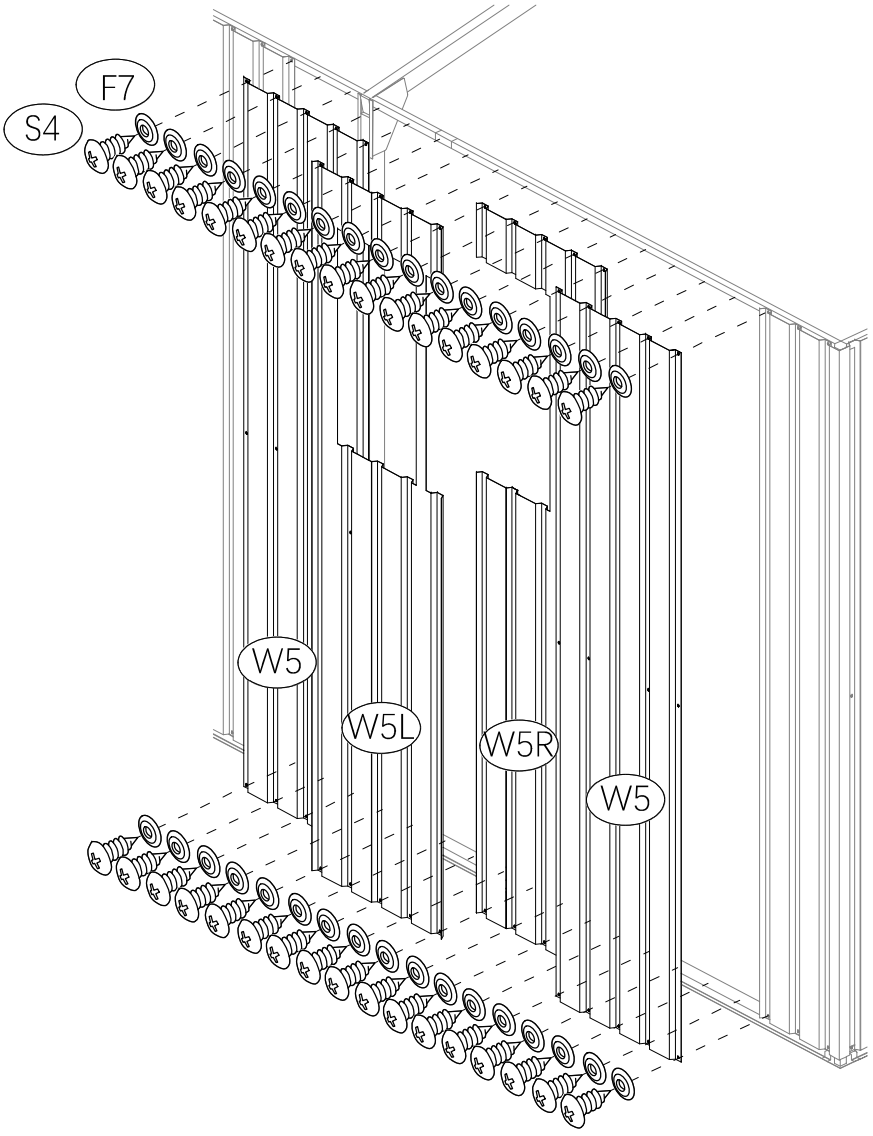

Note: When assembling difficult parts with screws S4, use screws S10 as alternatives

| | | |
|---|---|---|
| W5L | | 1 |
| W5R | | 1 |
| W5 | | 2 |
| S4 | | 34 |
| F7 | | 34 |





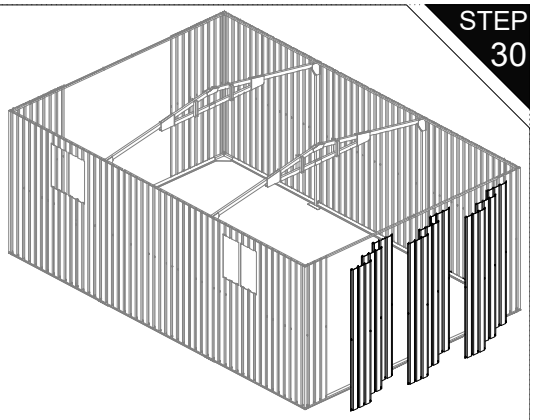


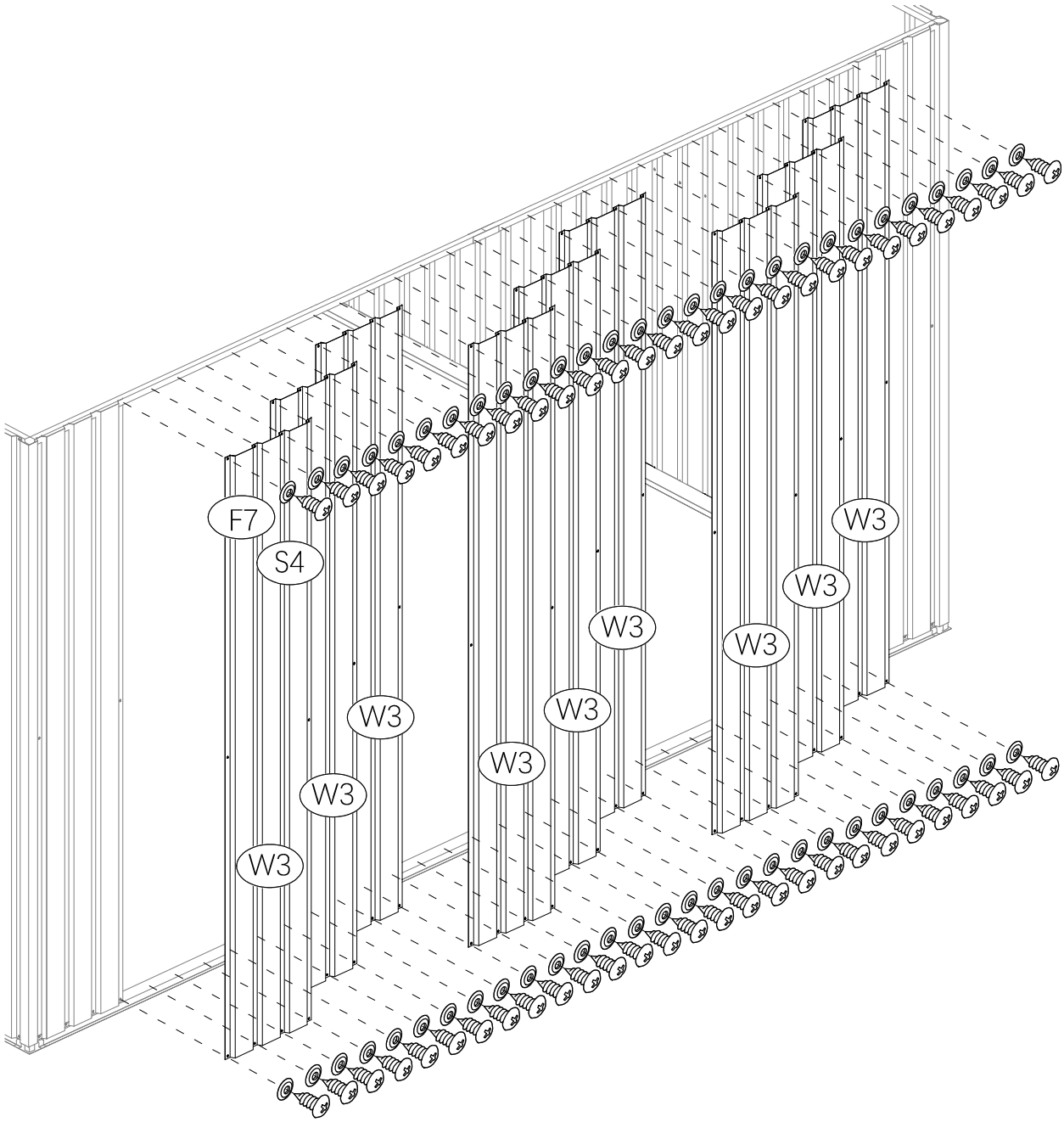

Note: When assembling difficult parts with screws S4, use screws S10 as alternatives

| | | |
|---|---|---|
| W3 | | 9 |
| S4 | | 56 |
| F7 | | 56 |

Front Left Right Back

STEP 30

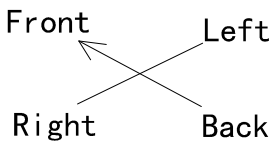





Note: When assembling difficult parts with screws S4, use screws S10 as alternatives

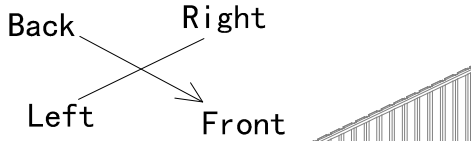
STEP 31

| | | |
|---|---|---|
| F7 |  | 46 |
| S6 |  | 46 |
| S7 |  | 46 |
| YE2 |  | 2 |



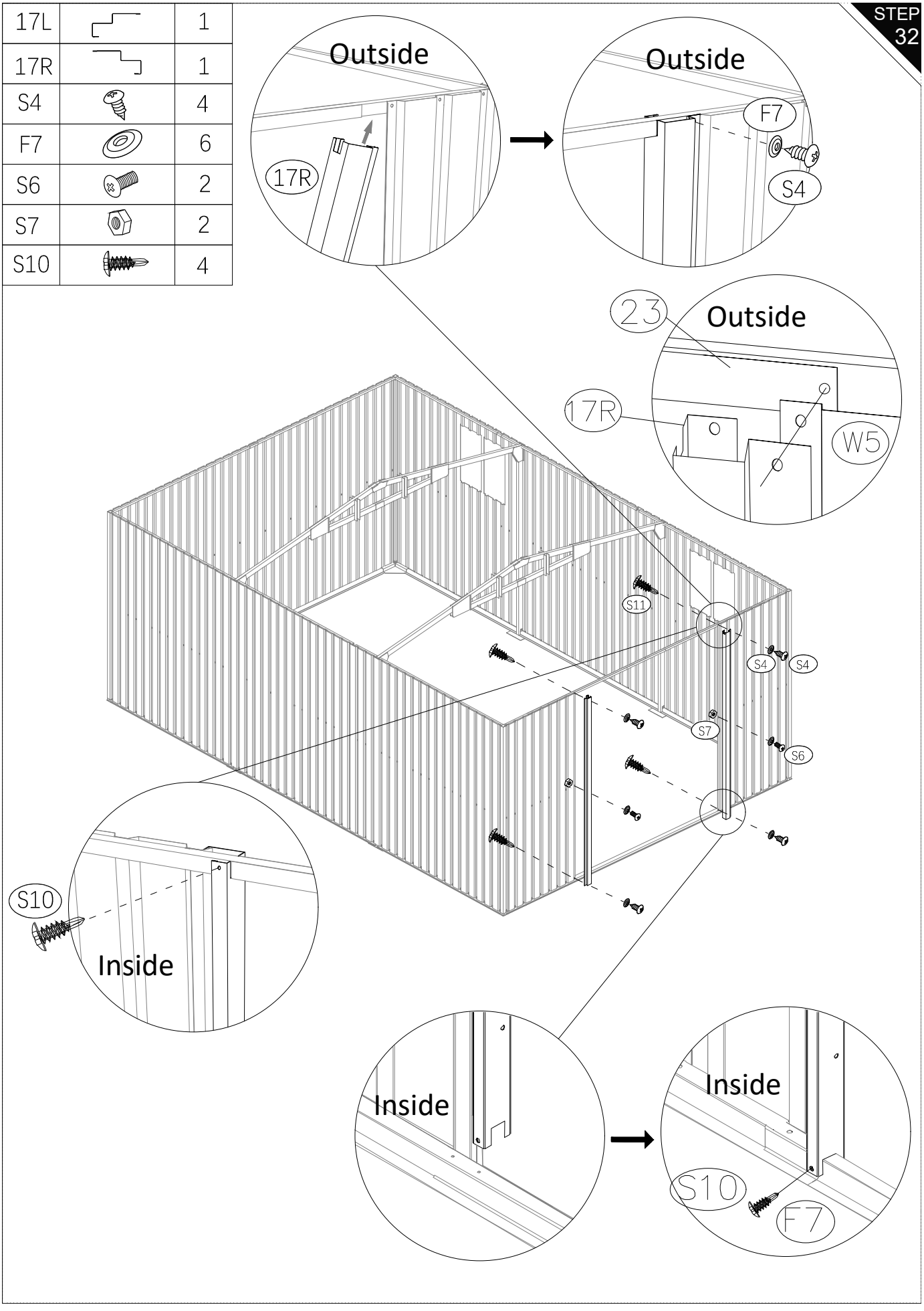






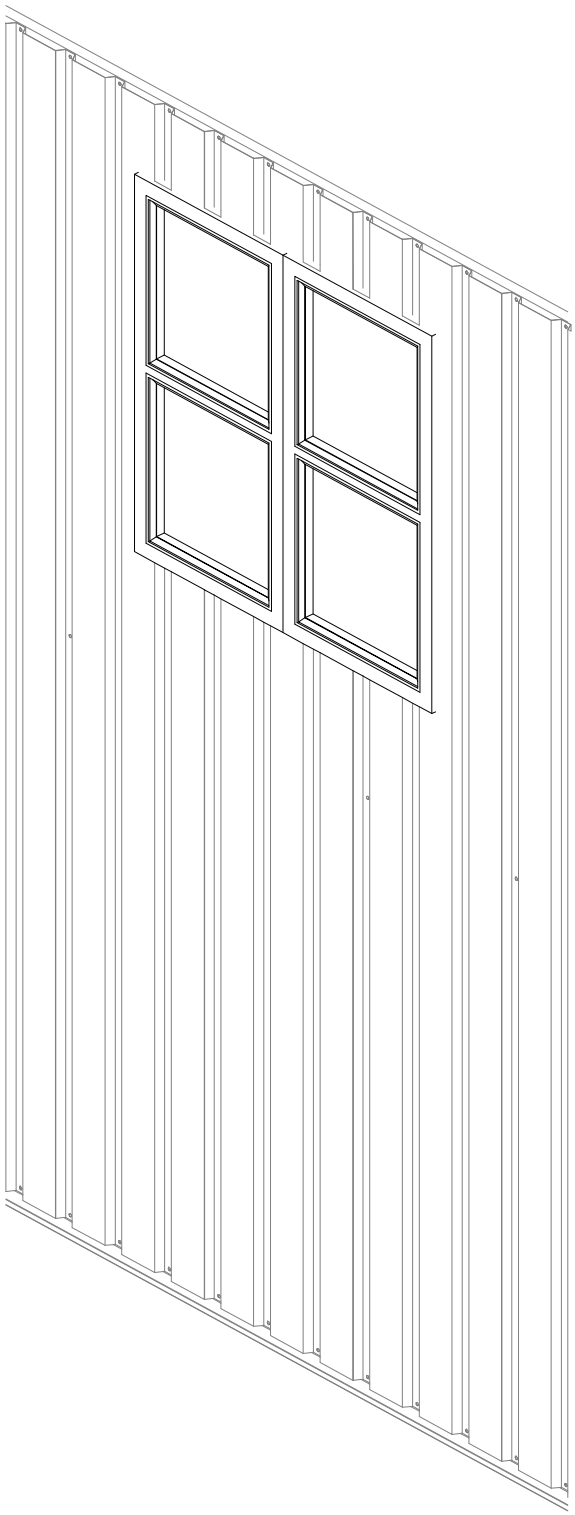
STEP 32

| | | |
|---|---|---|
| 17L | | 1 |
| 17R | | 1 |
| S4 | | 4 |
| F7 | | 6 |
| S6 | | 2 |
| S7 | | 2 |
| S10 | | 4 |



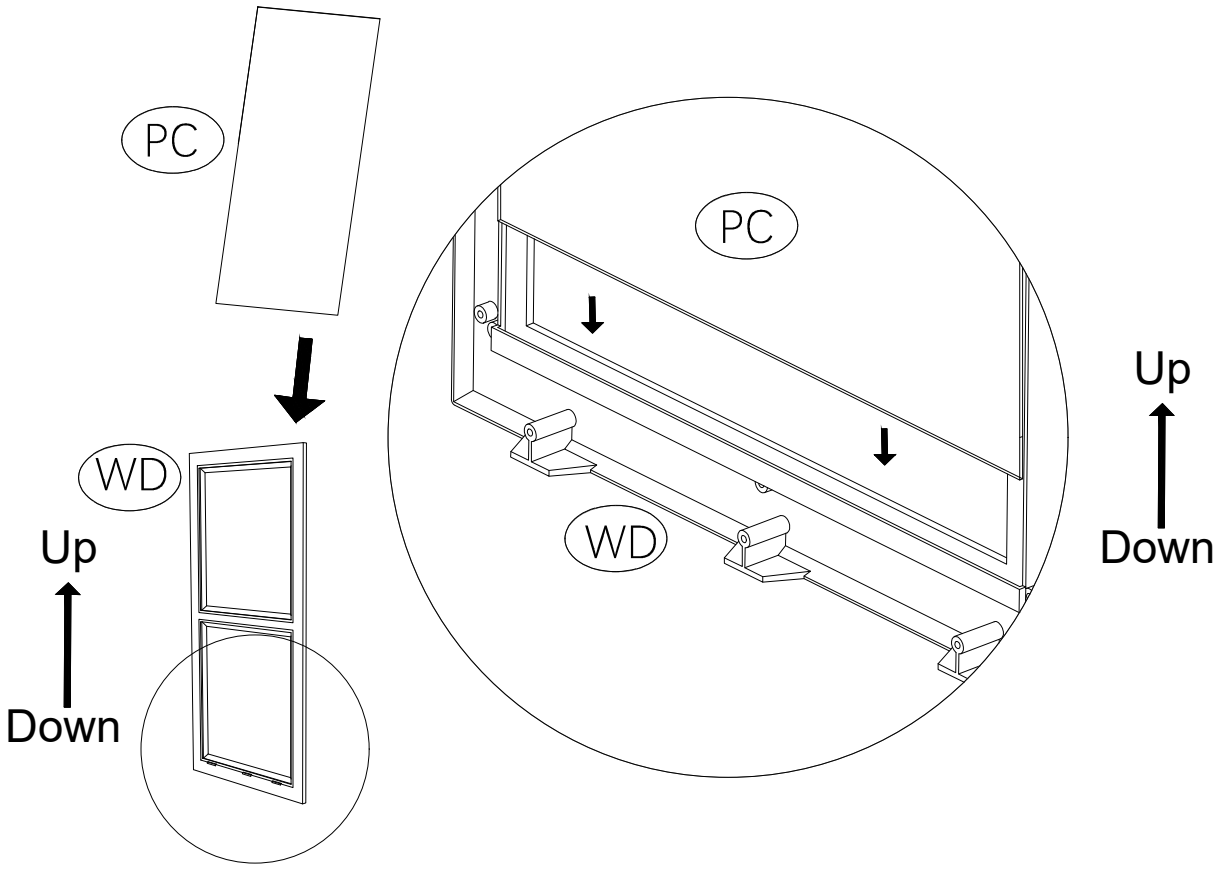
# Part 3 :

## Window Installation



| | | |
|---|---|---|
| WD | | 4 |
| PC | | 4 |

STEP 33

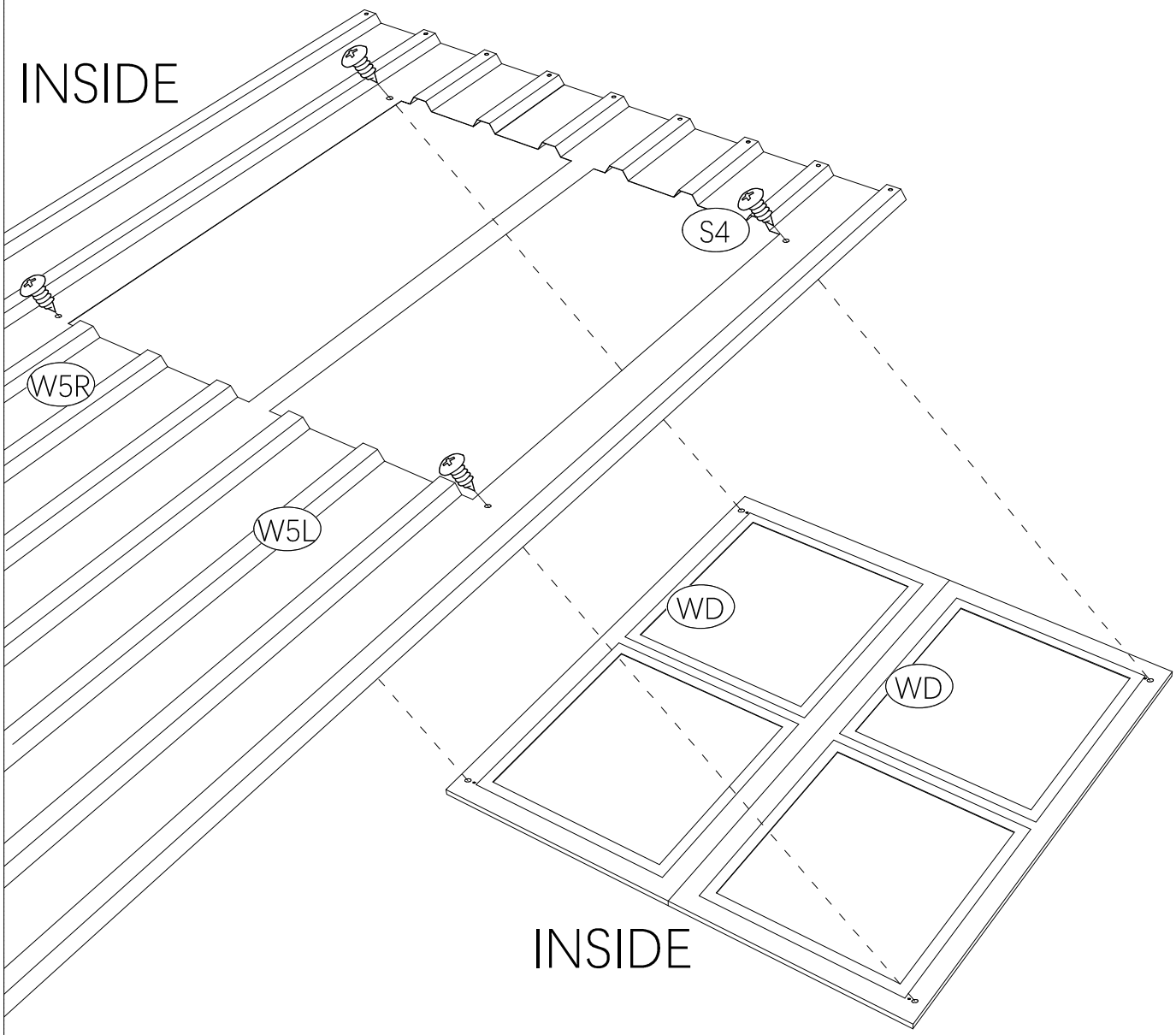



The milky white film faces outward and the films on both sides are torn off

X4

| S4 |  | 8 |
|---|---|---|

STEP 34

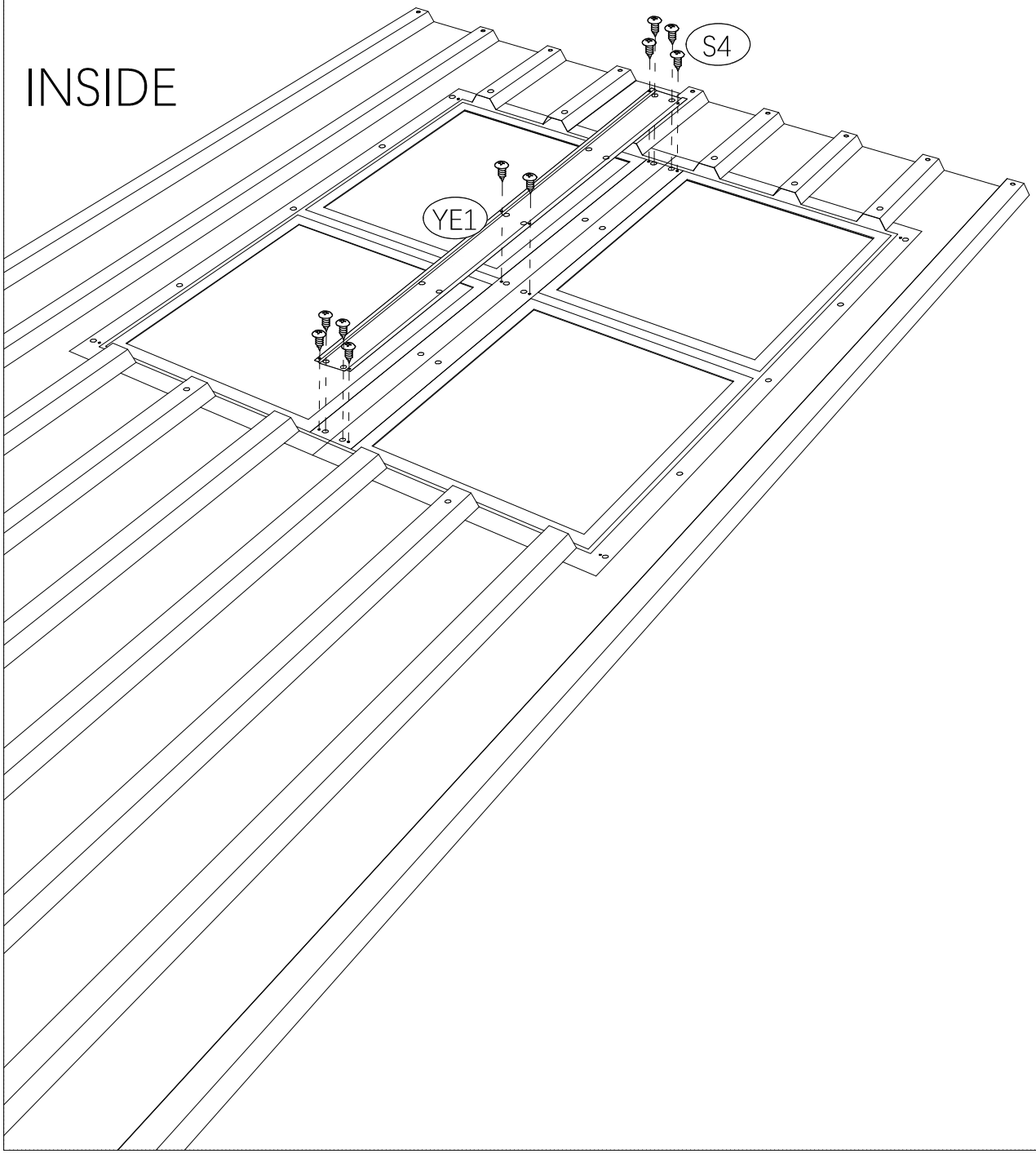



X2

| | | |
|---|---|---|
| YE1 | | 2 |
| S4 | | 20 |

STEP 35

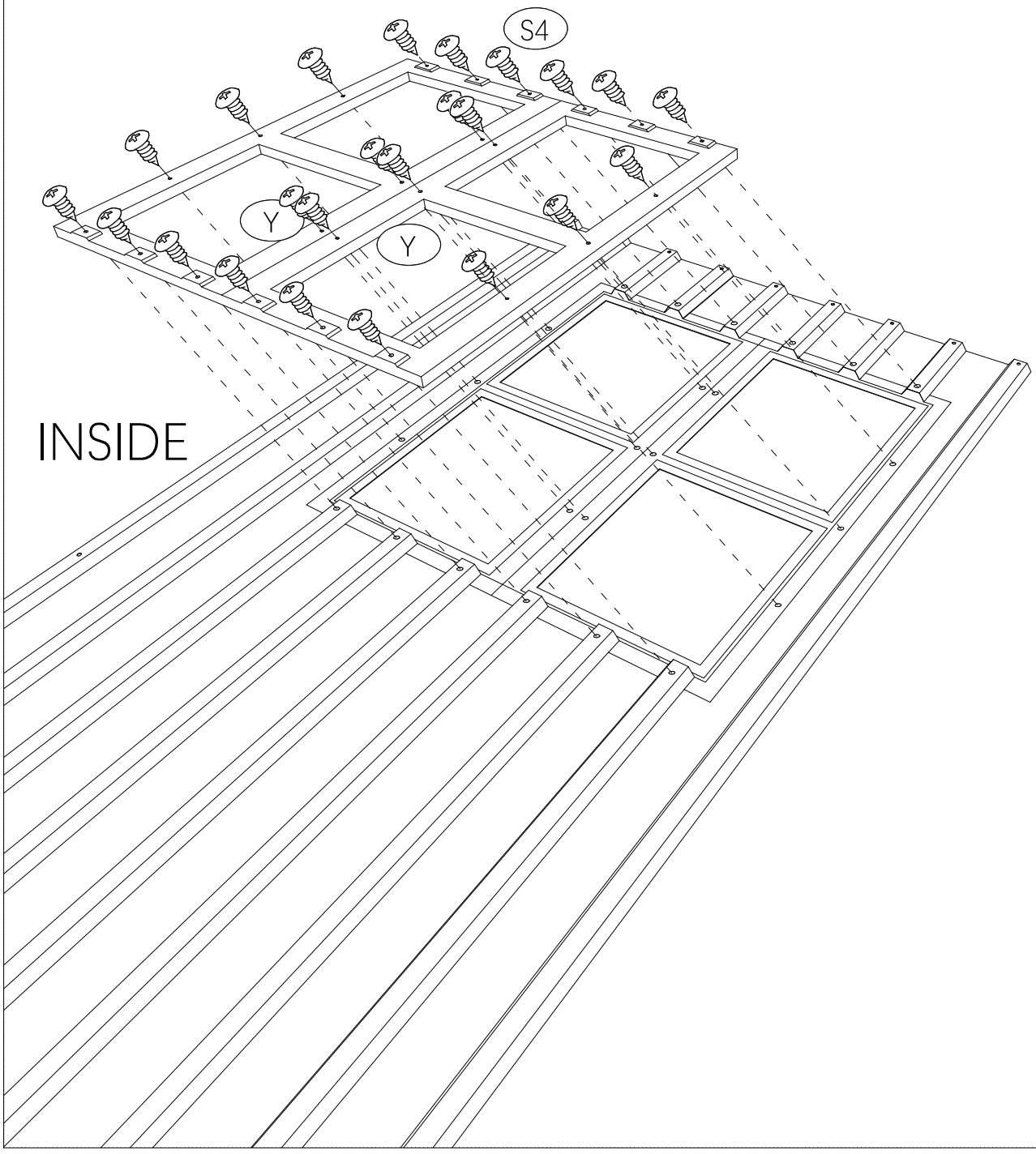
INSIDE




X2

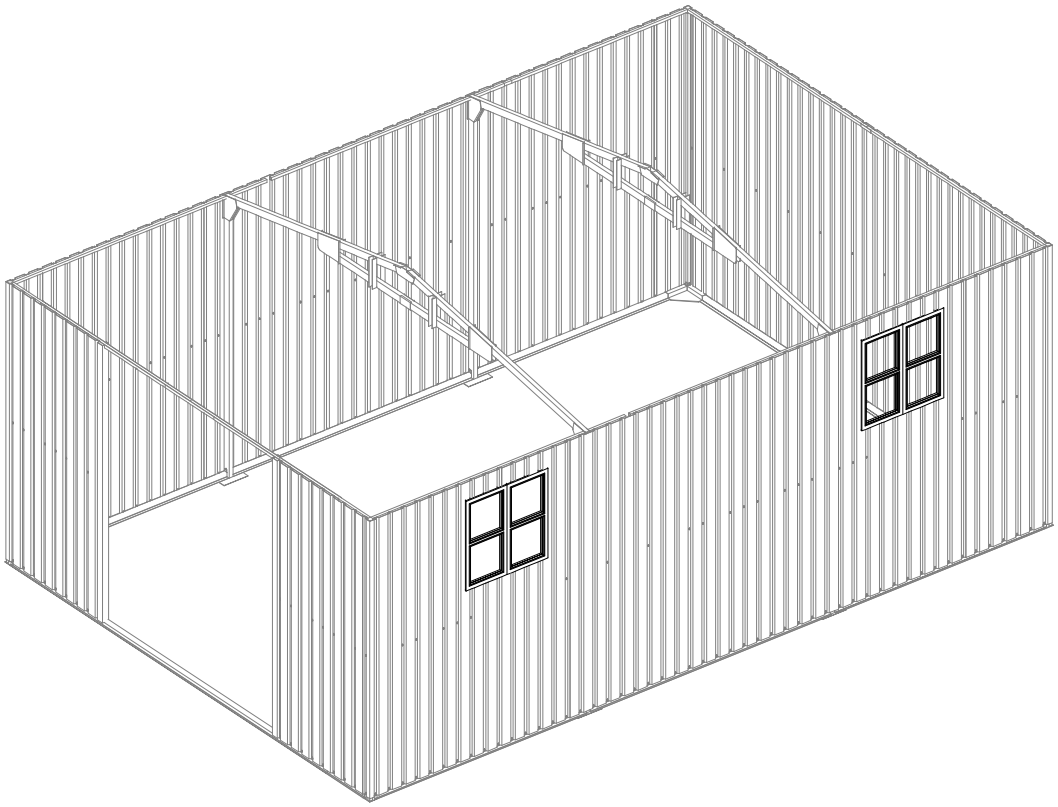
| | | |
|---|---|---|
| Y |  | 4 |
| S4 |  | 48 |

STEP 36



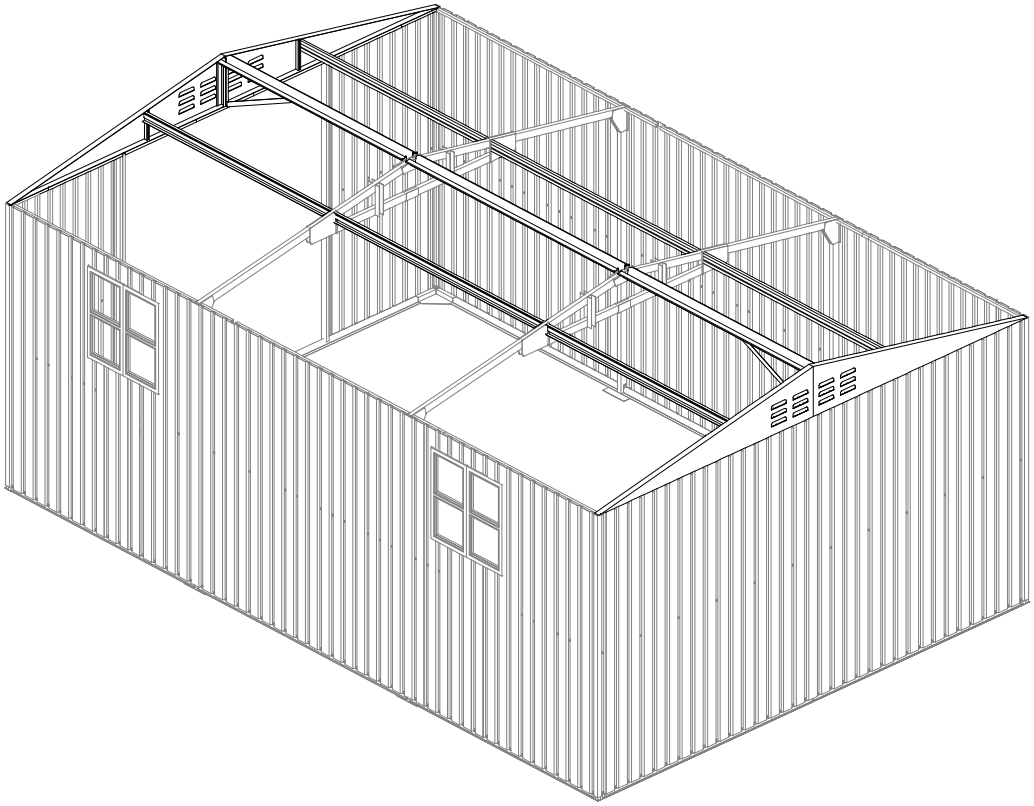

X2

STEP
37

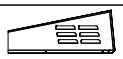


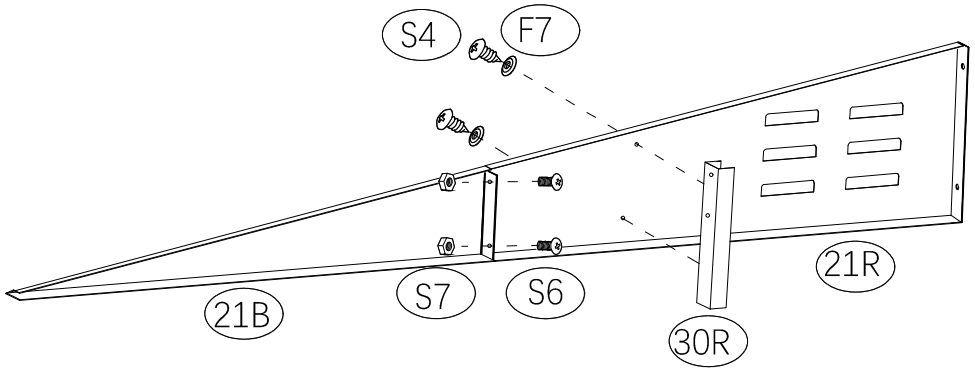
# Part 4 :

## Top Structure Installation



STEP 38

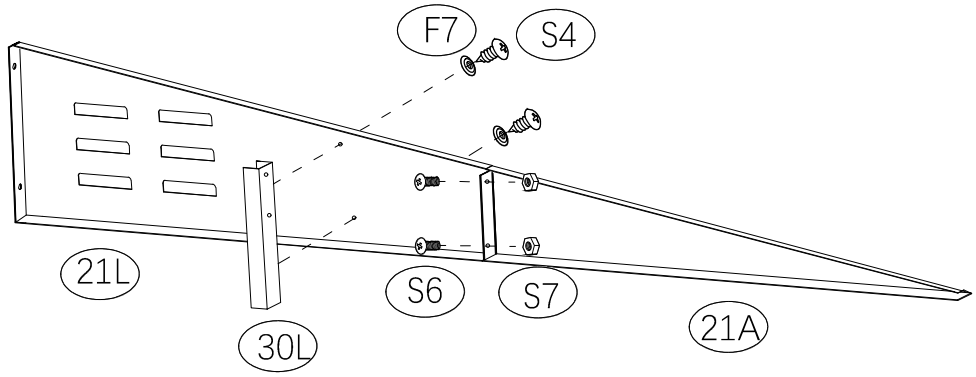
| | | | | | |
|---|---|---|---|---|---|
| 21B |  | 2 | F7 |  | 4 |
| 21R |  | 2 | S6 |  | 4 |
| 30R |  | 2 | S7 |  | 4 |
| S4 |  | 4 | | | |




X2

STEP 39

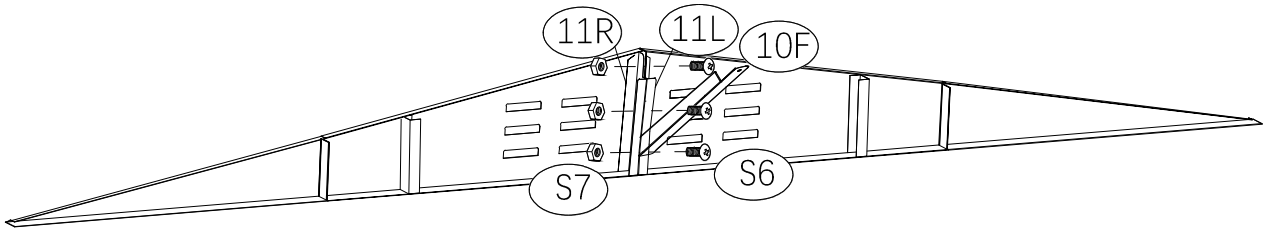
| | | | | | |
|---|---|---|---|---|---|
| 21A |  | 2 | F7 |  | 4 |
| 21L |  | 2 | S6 |  | 4 |
| 30L |  | 2 | S7 |  | 4 |
| S4 |  | 4 | | | |

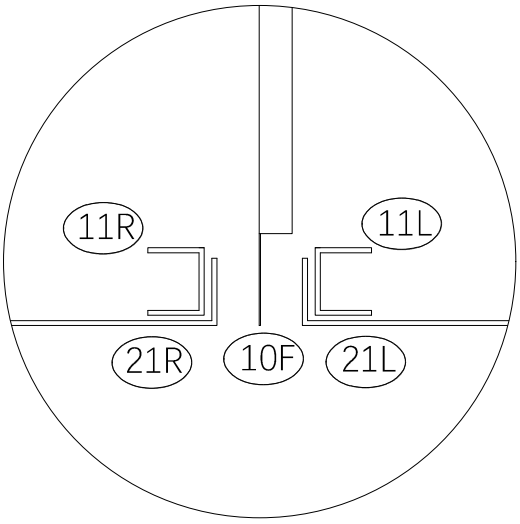



X2

STEP 40

| | | |
|---|---|---|
| 11L |  | 2 |
| 11R |  | 2 |
| 10F |  | 2 |
| S6 |  | 6 |
| S7 |  | 6 |

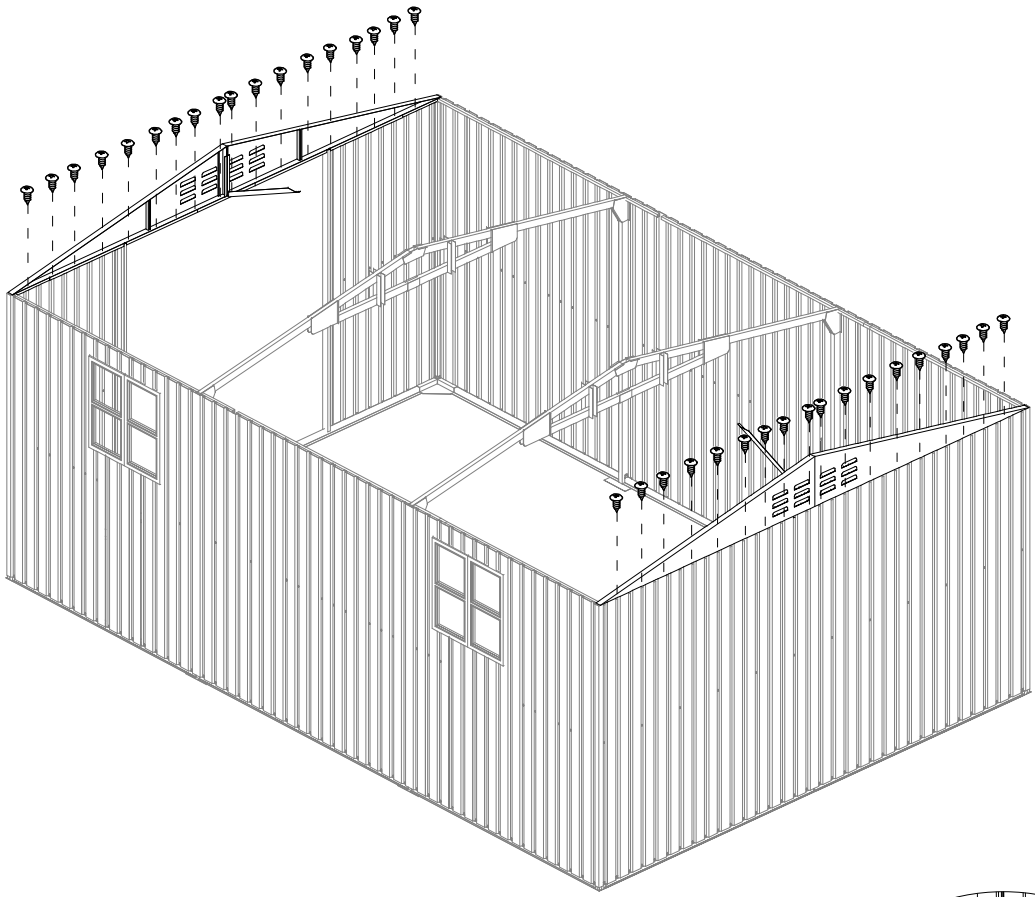


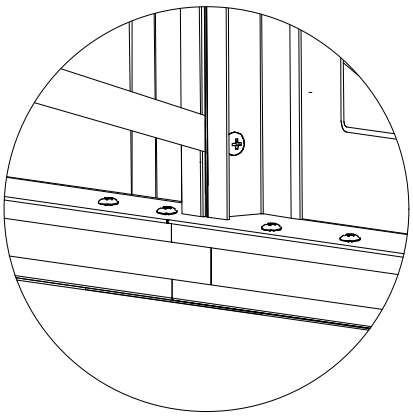




X2

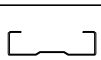
| S4 |  | 36 |
|---|---|---|

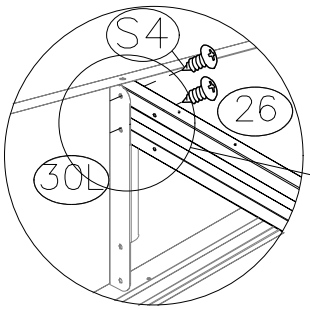
STEP 41

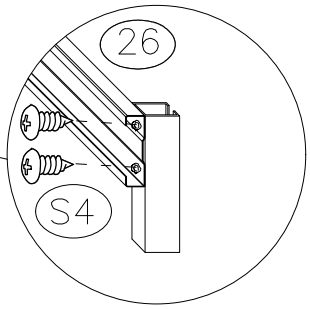


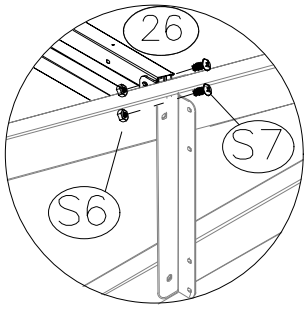


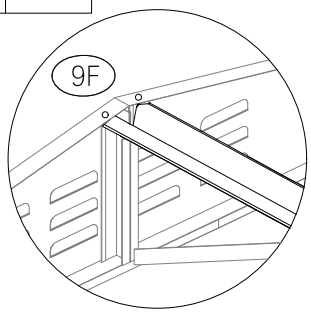
STEP 42

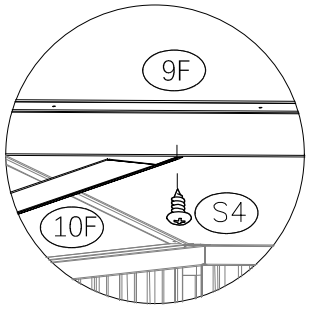
| | | |
|---|---|---|
| 9F |  | 1 |
| 25 |  | 1 |
| 26 |  | 1 |
| S6 |  | 6 |
| S7 |  | 6 |
| S4 |  | 5 |

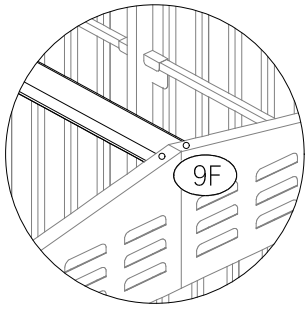


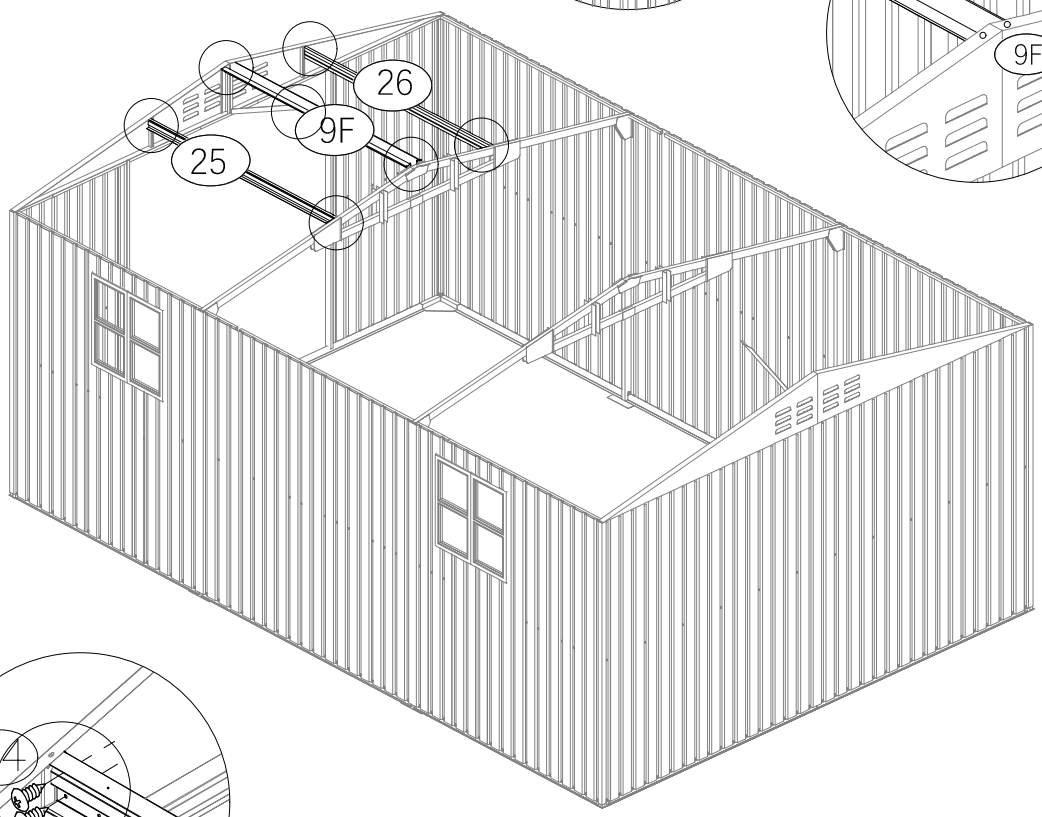



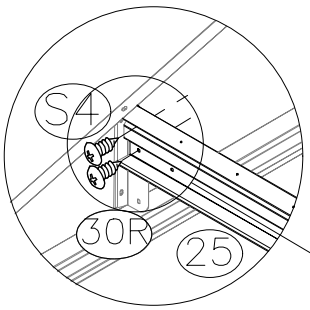



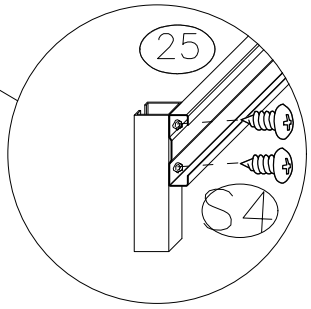



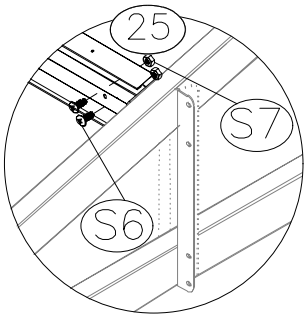



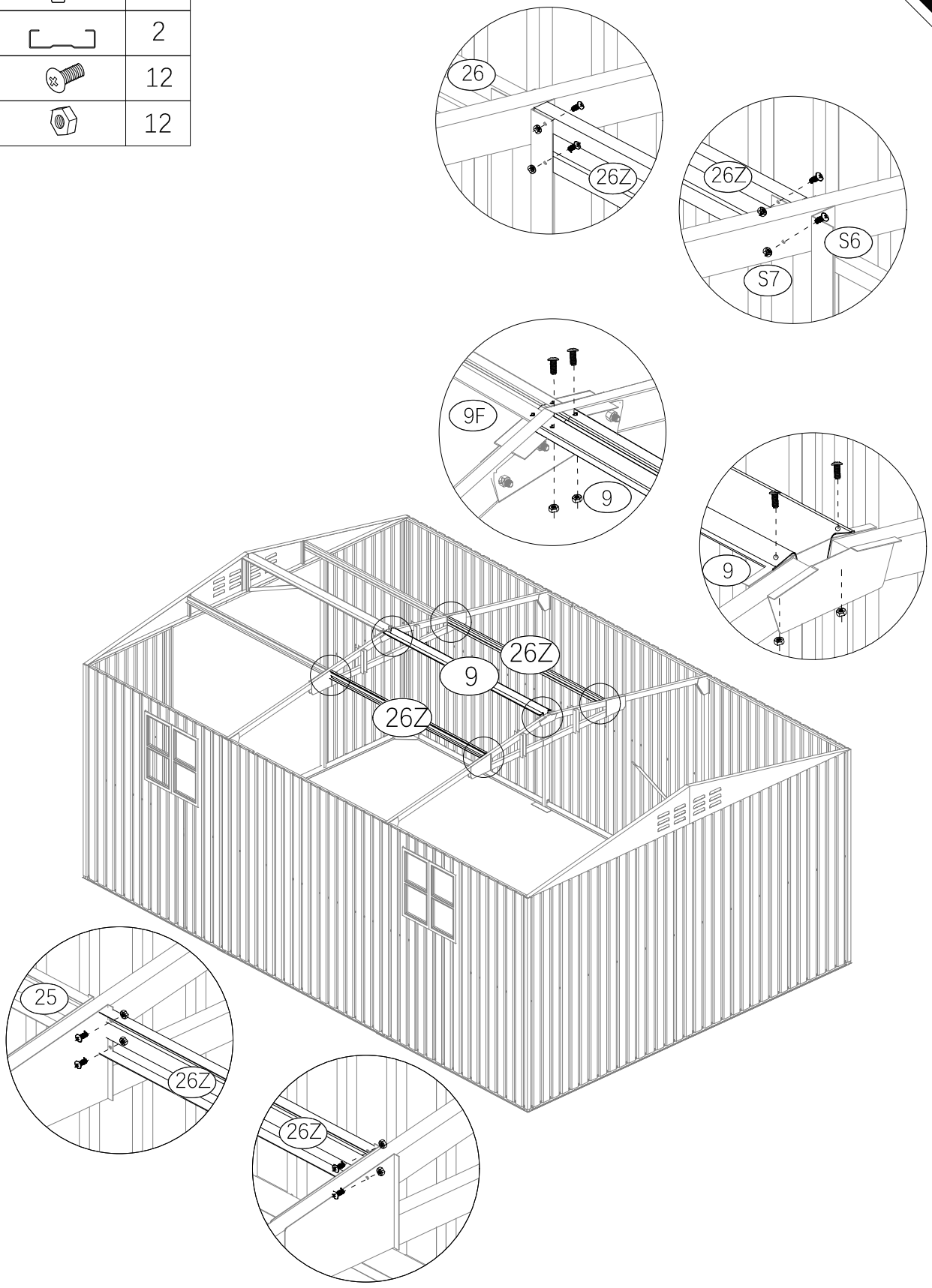



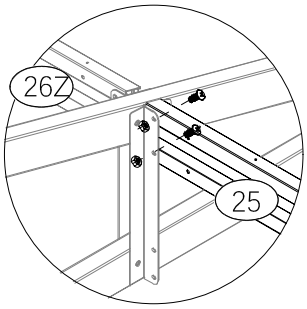
| | | |
|---|---|---|
| 9 | | 1 |
| 26Z | | 2 |
| S6 | | 12 |
| S7 | | 12 |

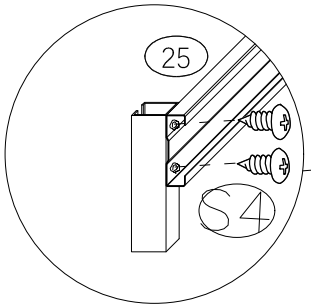
STEP 43

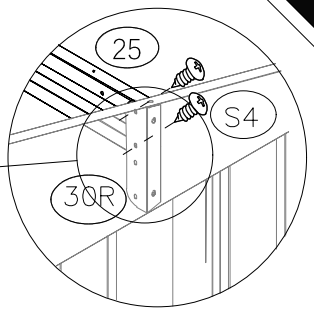


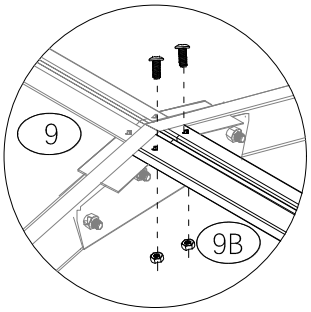
| | | |
|---|---|---|
| 9B | | 1 |
| 25 | | 1 |
| 26 | | 1 |
| S6 | | 6 |
| S7 | | 6 |
| S4 | | 5 |

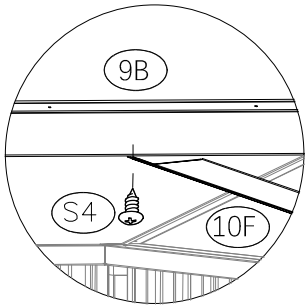
STEP 44

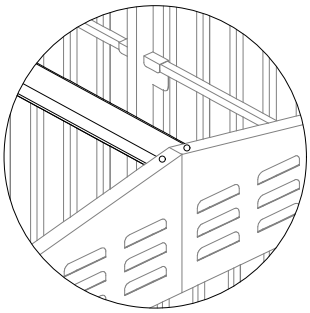


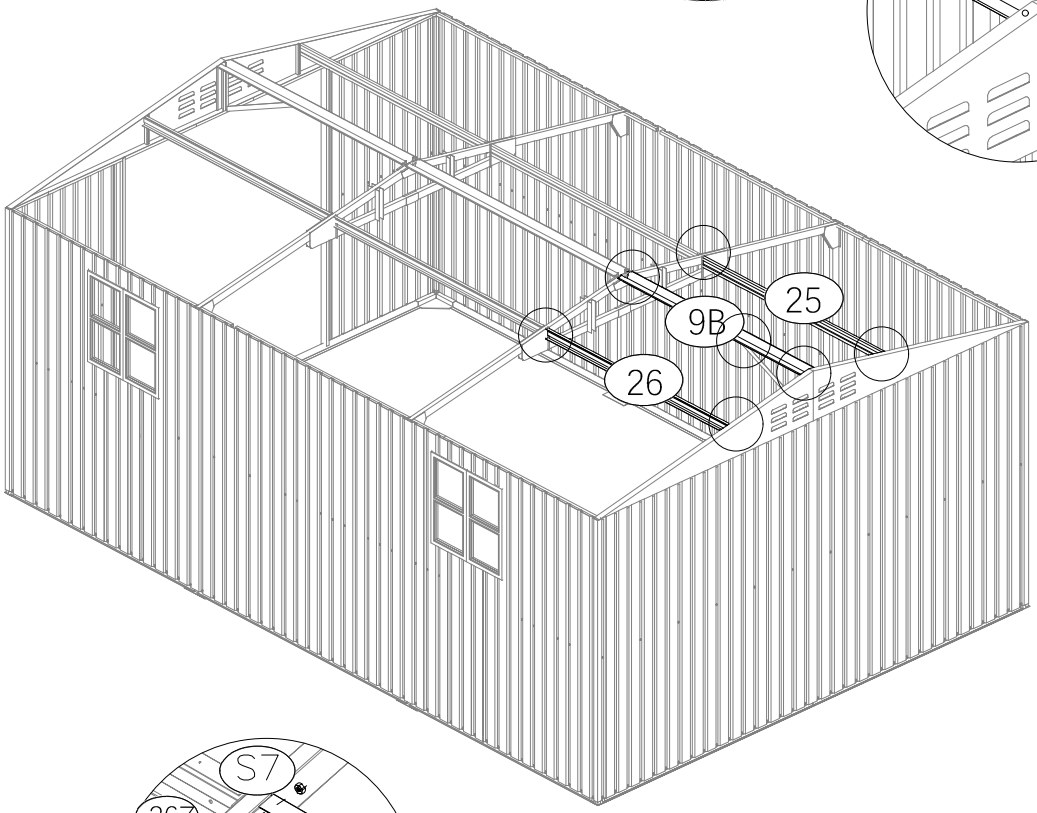



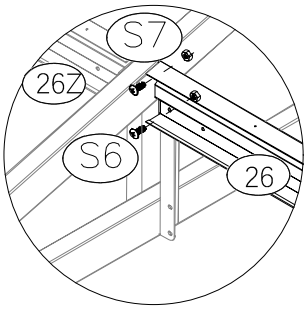



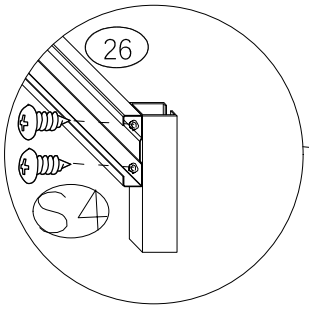



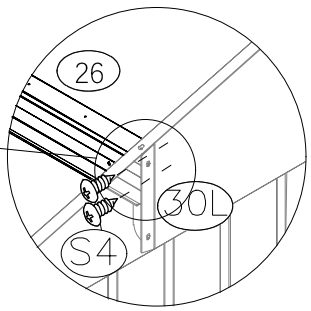





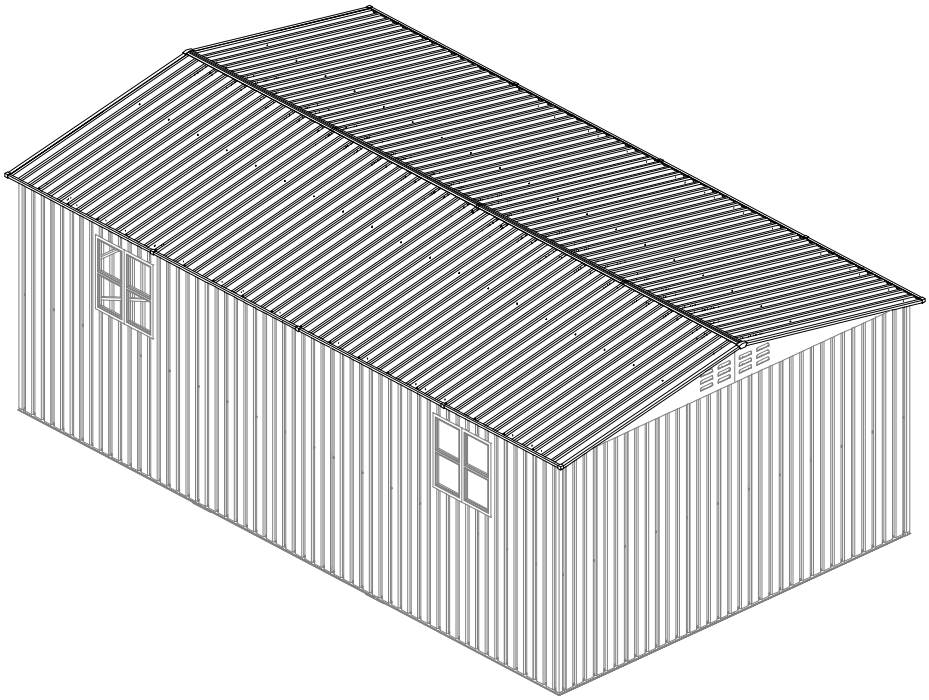



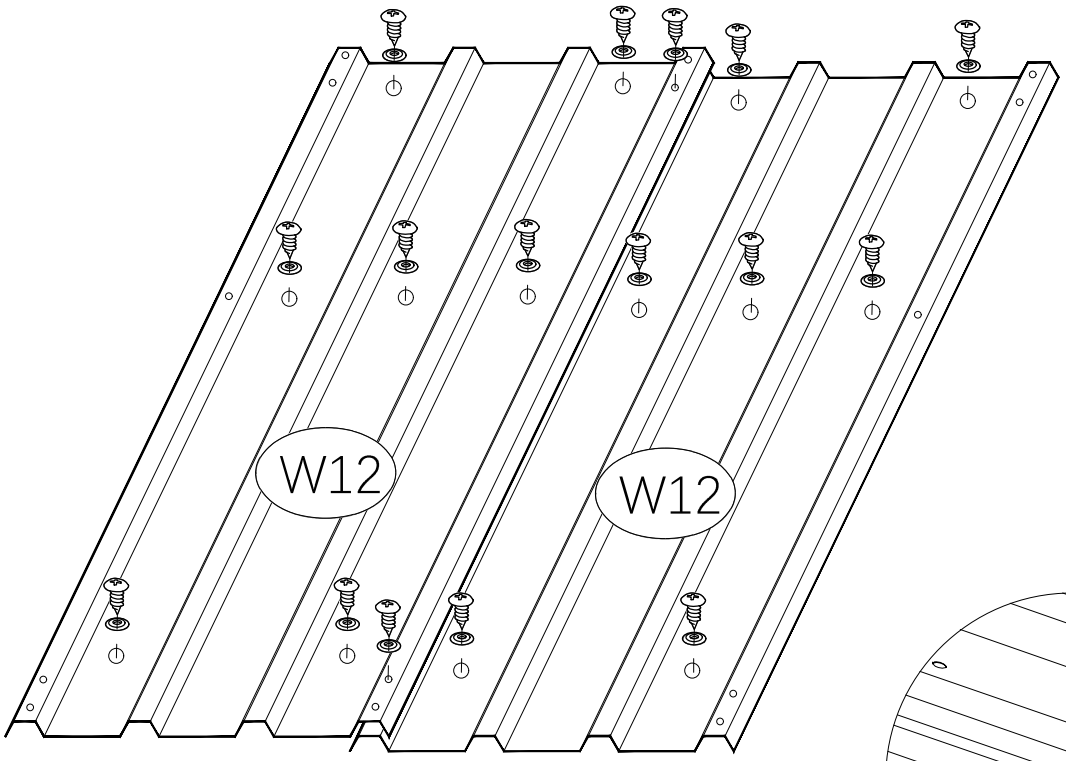



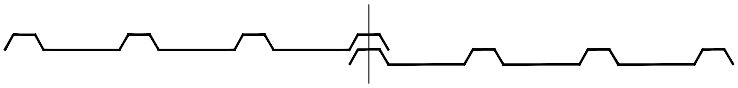



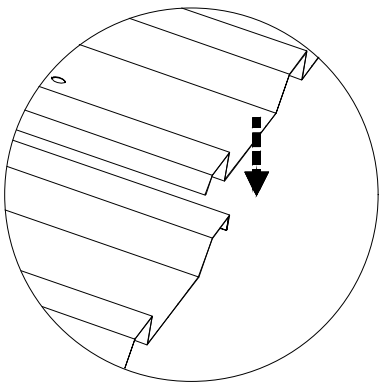
# Part 5 :

## Roof Shingle Installation



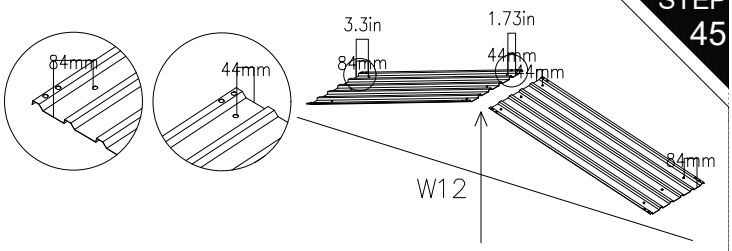


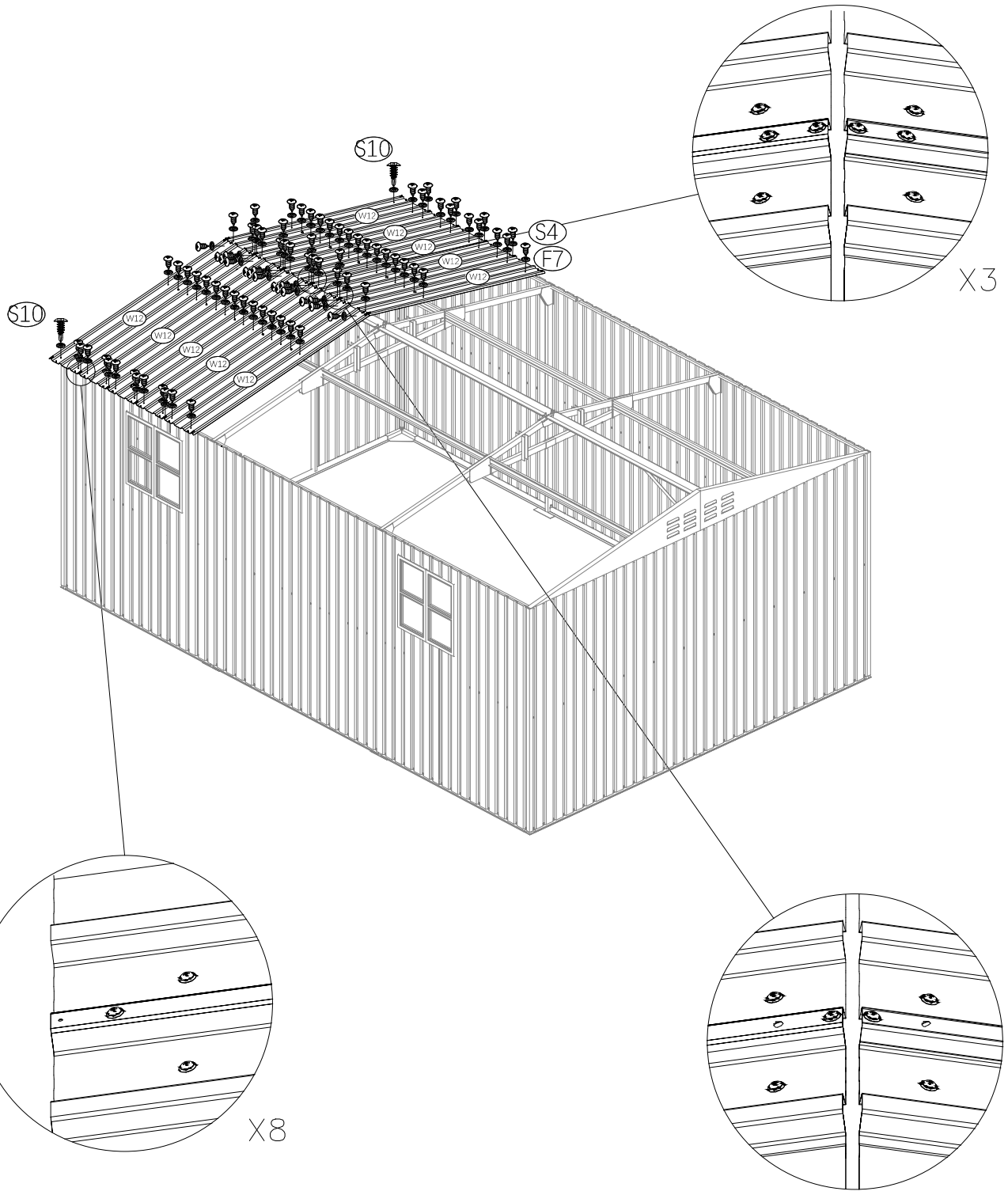





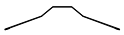
| | | |
|---|---|---|
| W12 | | 10 |
| S4 | | 90 |
| F7 | | 90 |
| S10 | | 2 |

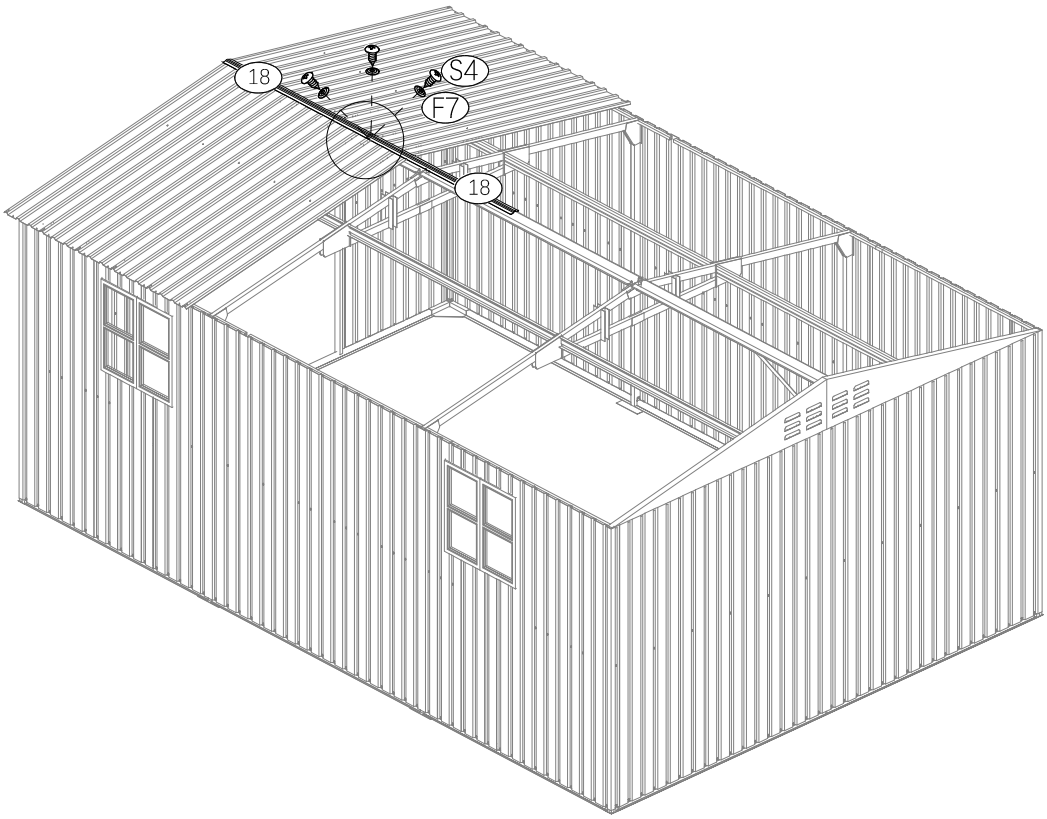
STEP 45

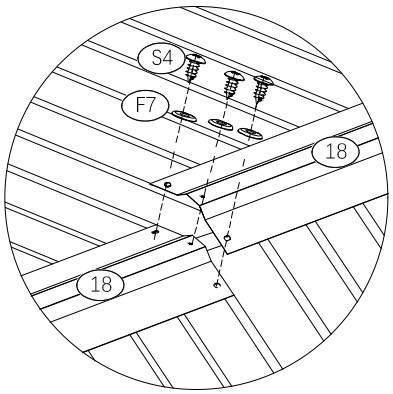



Note: When assembling difficult parts with screws S4, use screws S8 or S10 as alternatives

| | | |
|---|---|---|
| 18 |  | 2 |
| S4 |  | 3 |
| F7 |  | 3 |

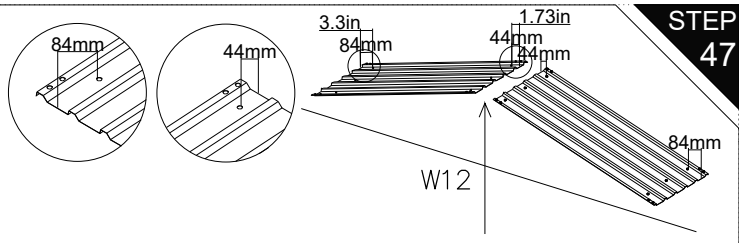


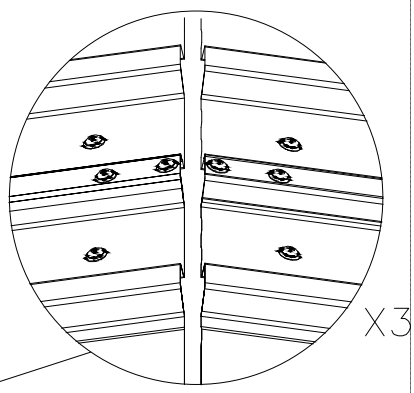



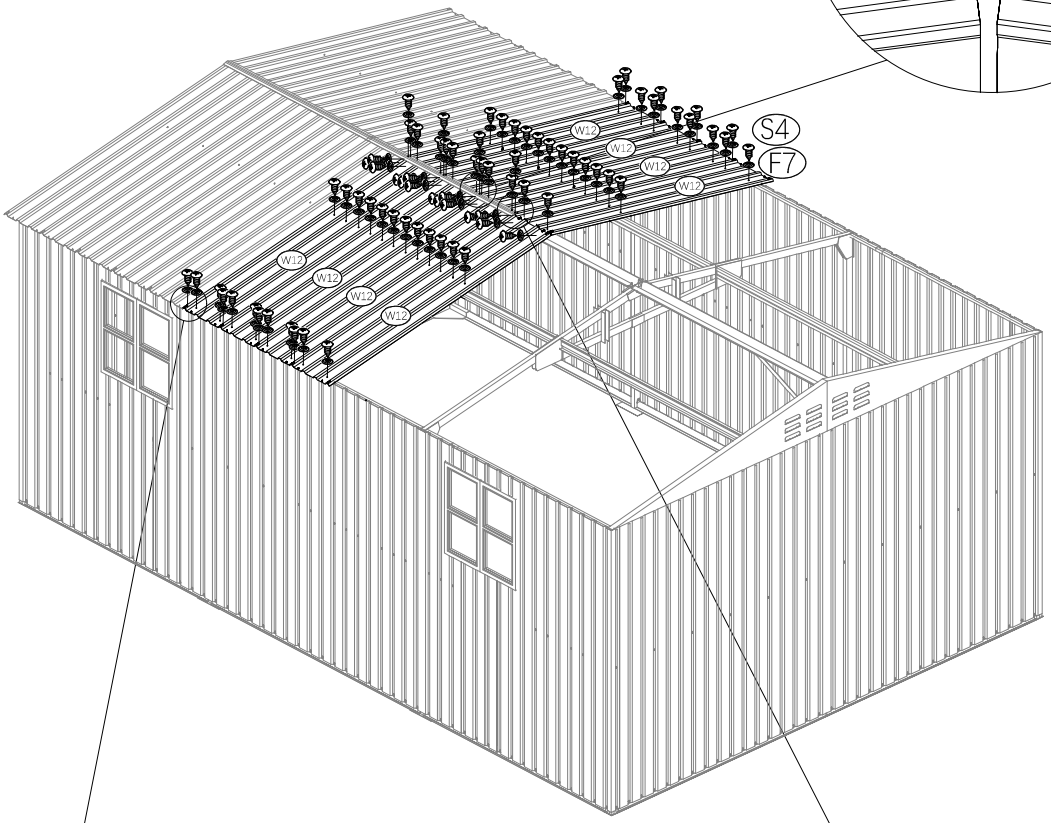

Note: When assembling difficult parts with screws S4,
use screws S8 or S10 as alternatives

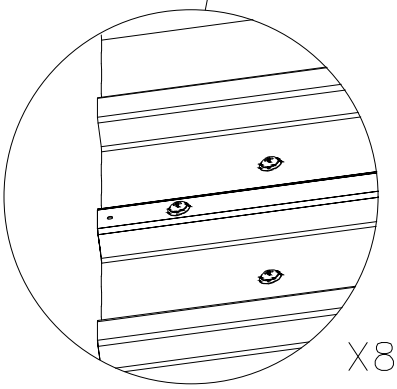
| | | |
|---|---|---|
| W12 | | 8 |
| S4 | | 78 |
| F7 | | 78 |

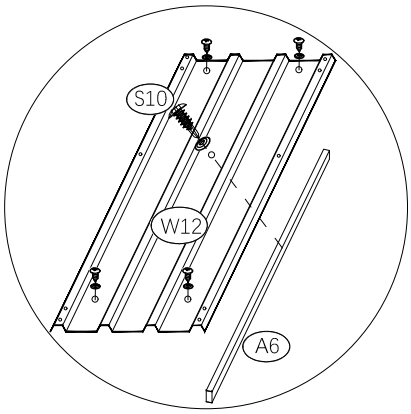
STEP 47

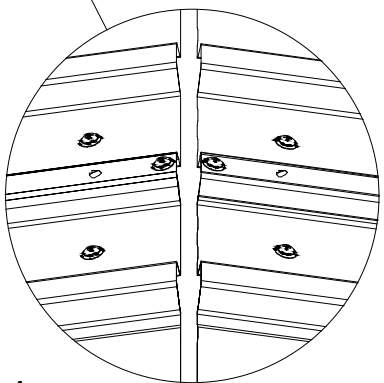


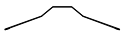



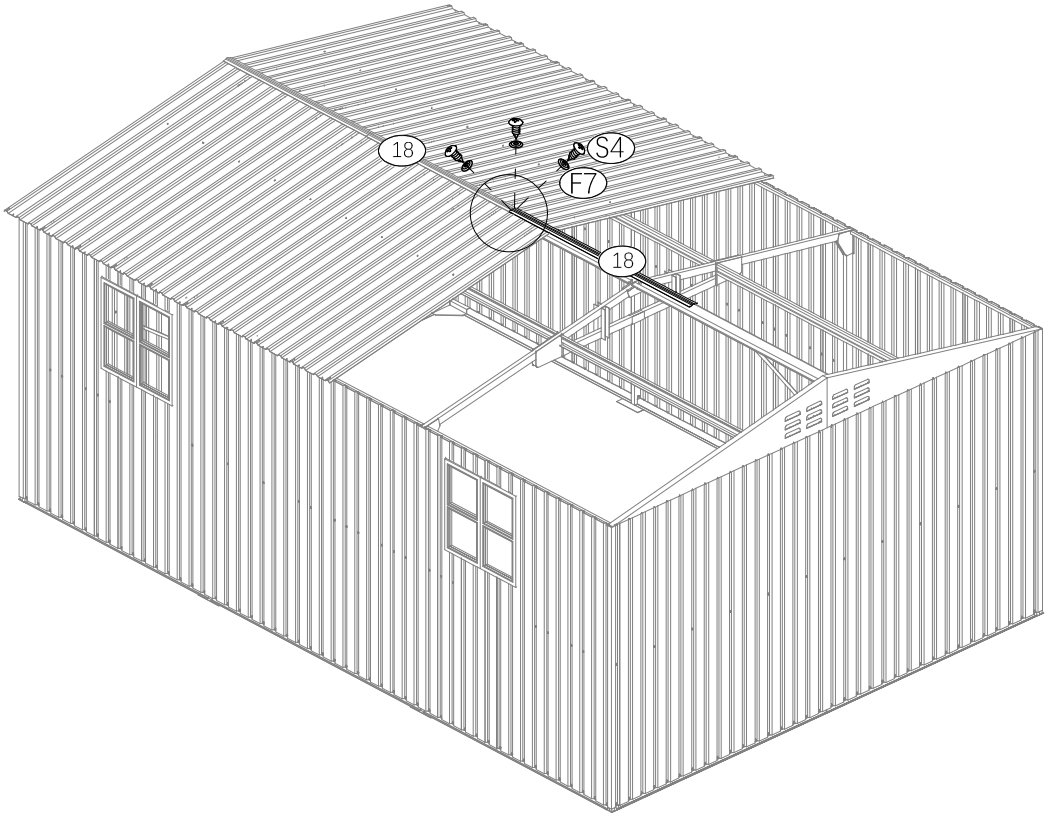



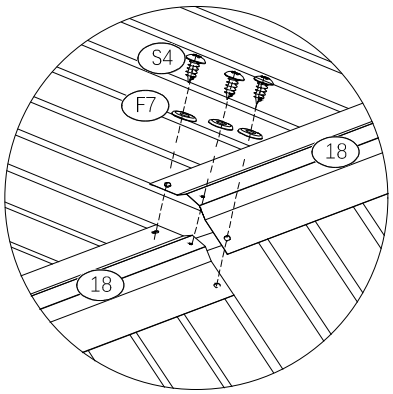



Note: When assembling difficult parts with screws S4, use screws S8 or S10 as alternatives

| | | |
|---|---|---|
| 18 |  | 1 |
| S4 |  | 3 |
| F7 |  | 3 |

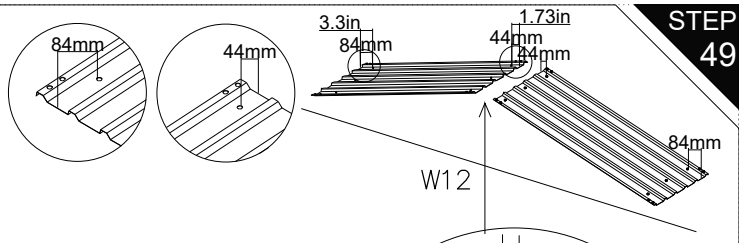


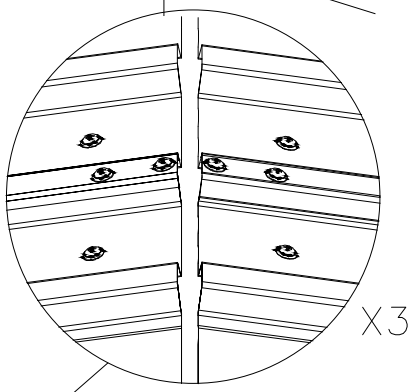



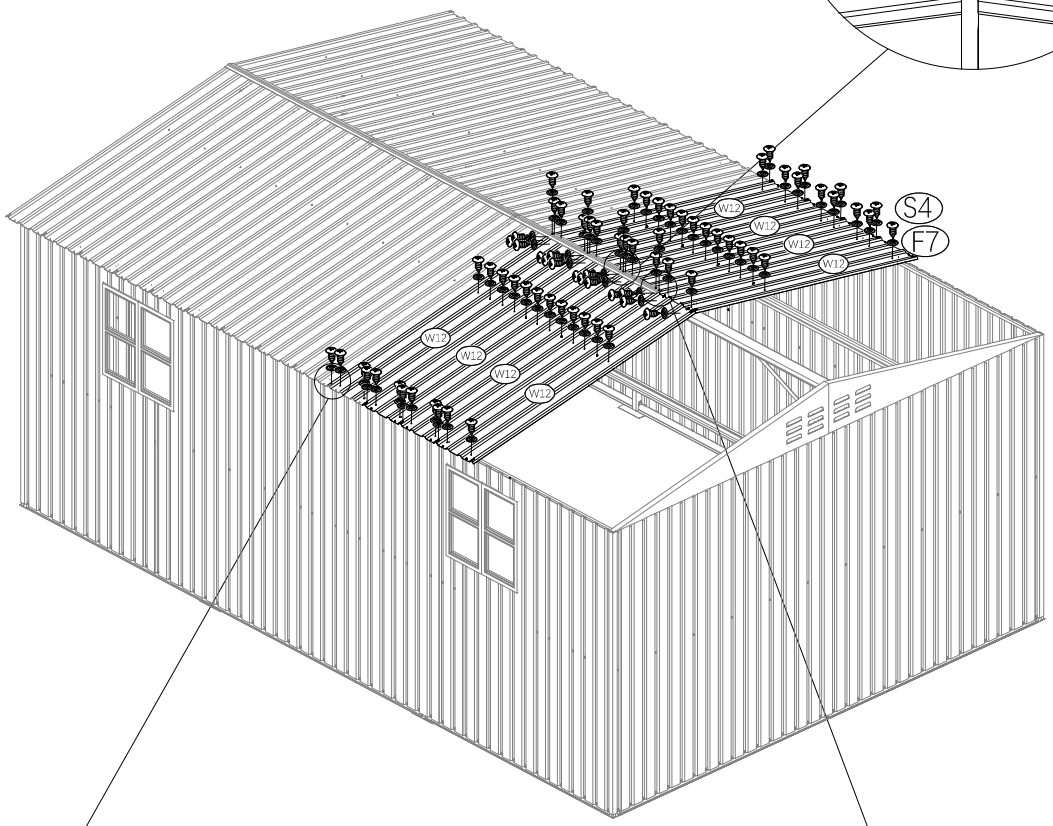

Note: When assembling difficult parts with screws S4, use screws S8 or S10 as alternatives

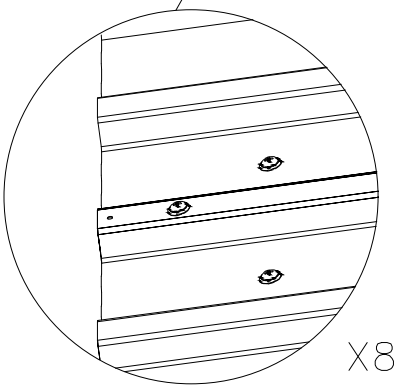
| | | |
|---|---|---|
| W12 | | 8 |
| S4 | | 78 |
| F7 | | 78 |

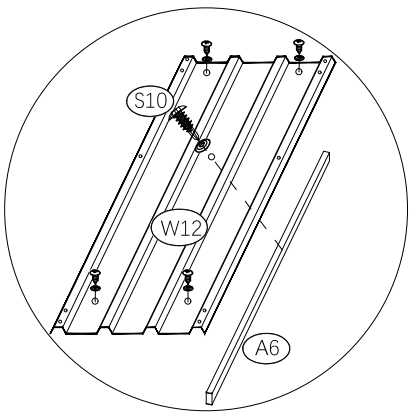
STEP 49

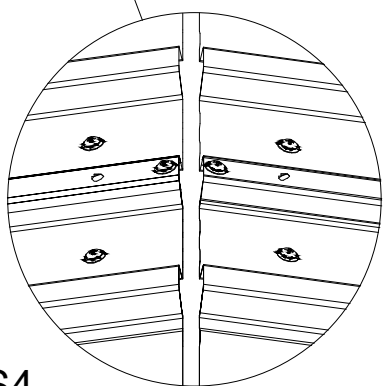


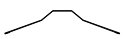



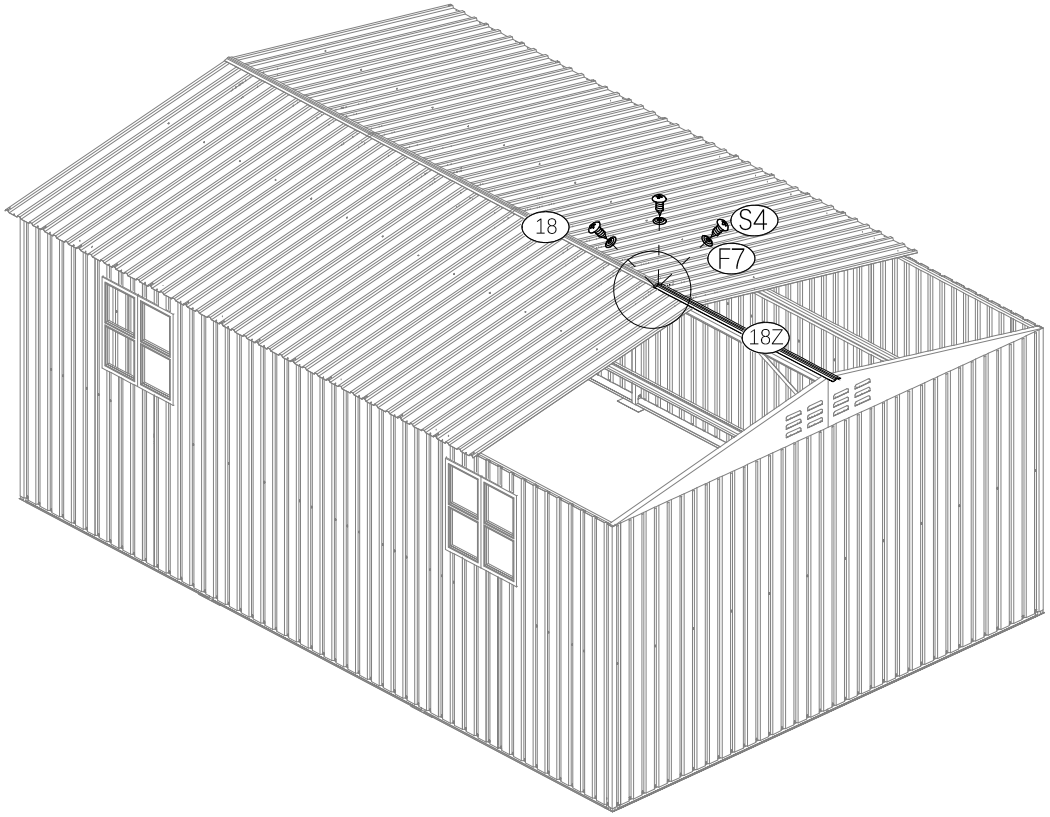



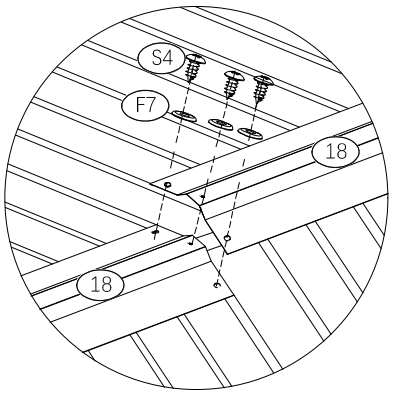



Note: When assembling difficult parts with screws S4, use screws S8 or S10 as alternatives

| | | |
|---|---|---|
| 18Z |  | 1 |
| S4 |  | 3 |
| F7 |  | 3 |

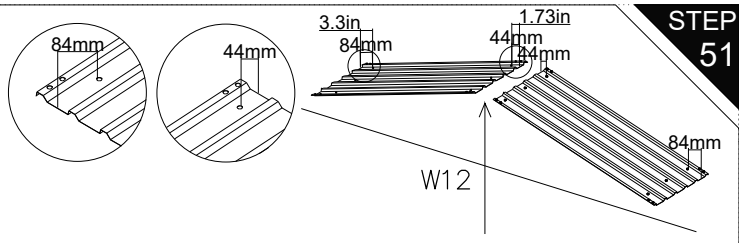
STEP 50



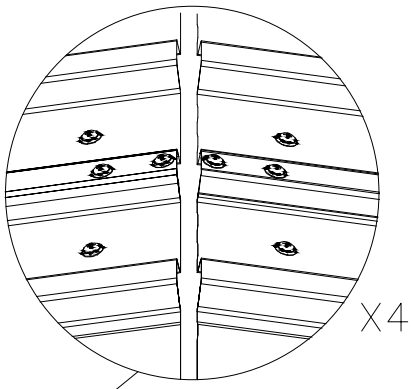



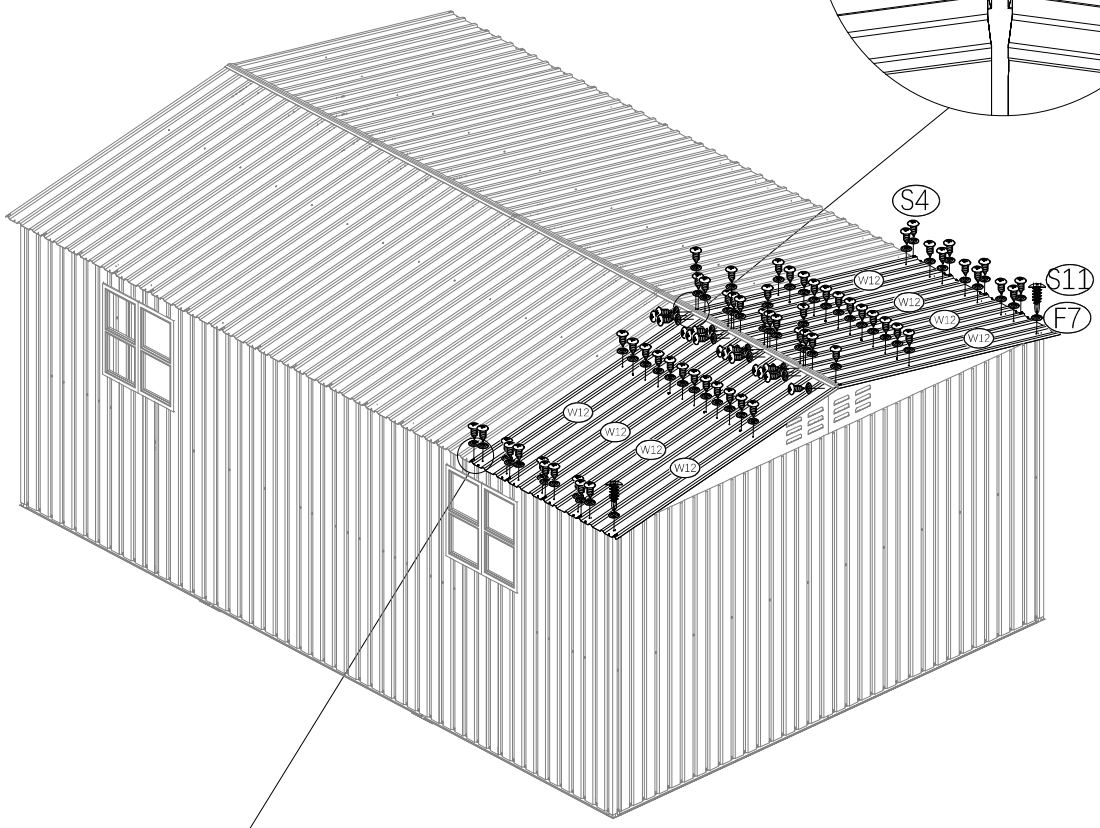

Note: When assembling difficult parts with screws S4, use screws S8 or S10 as alternatives

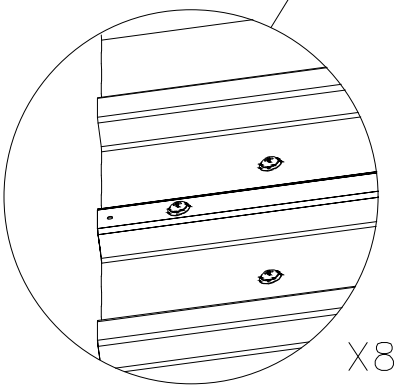
| | | |
|---|---|---|
| W12 | | 8 |
| S4 | | 78 |
| F7 | | 78 |
| S10 | | 2 |




STEP 51

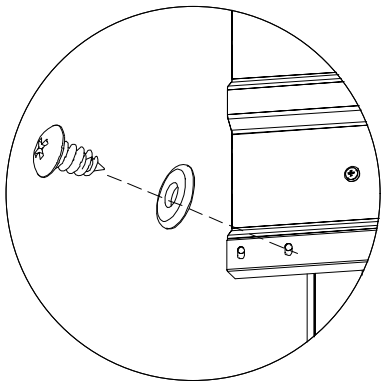


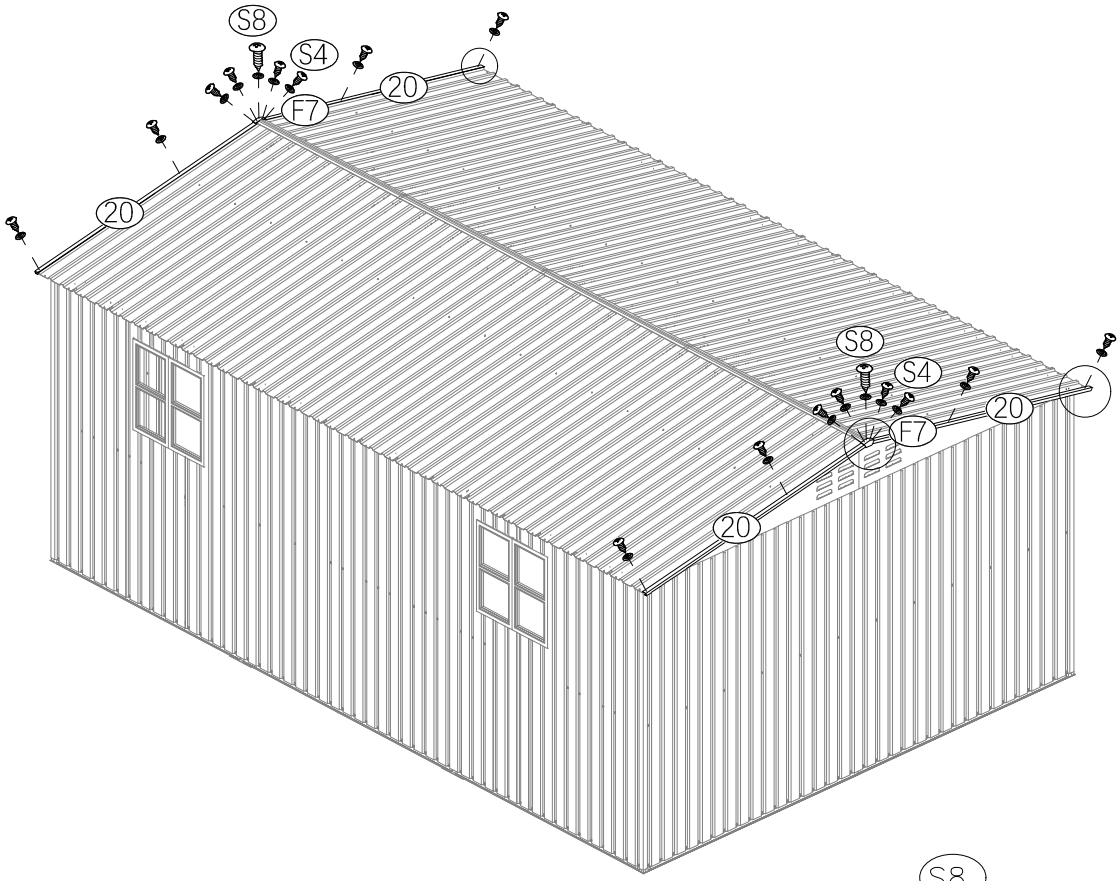



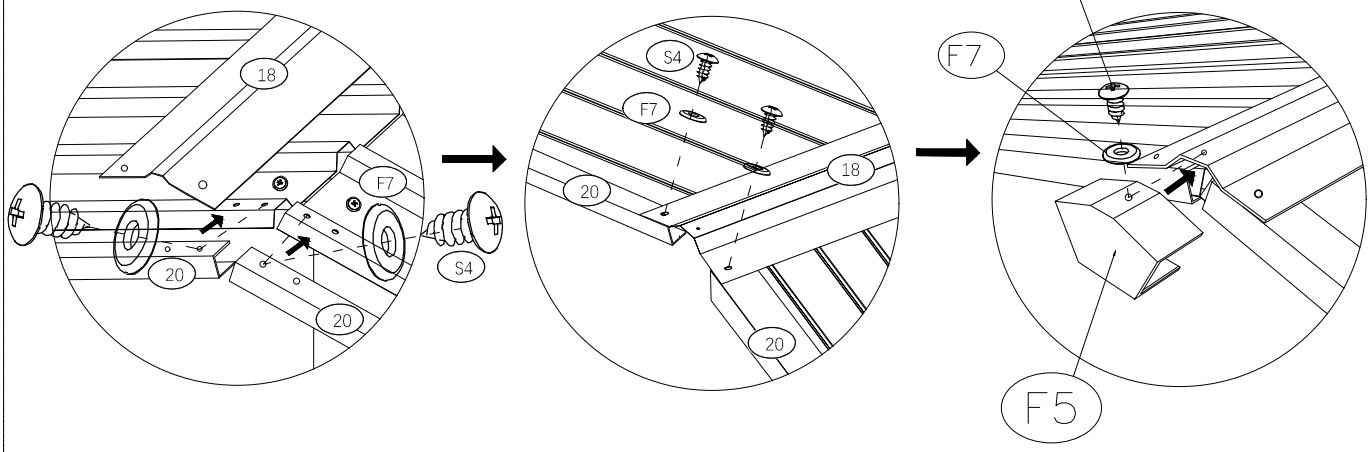




Note: When assembling difficult parts with screws S4, use screws S8 or S10 as alternatives

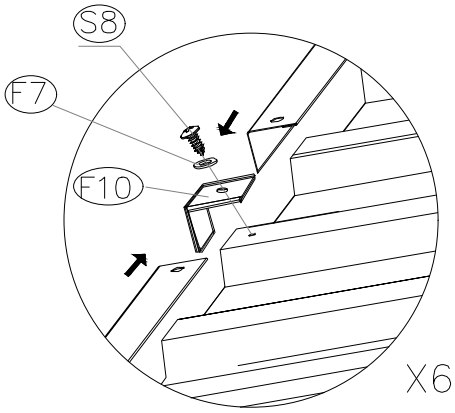
| | | |
|---|---|---|
| F5 |  | 2 |
| 20 |  | 2 |
| S4 |  | 16 |
| F7 |  | 18 |
| S8 |  | 2 |

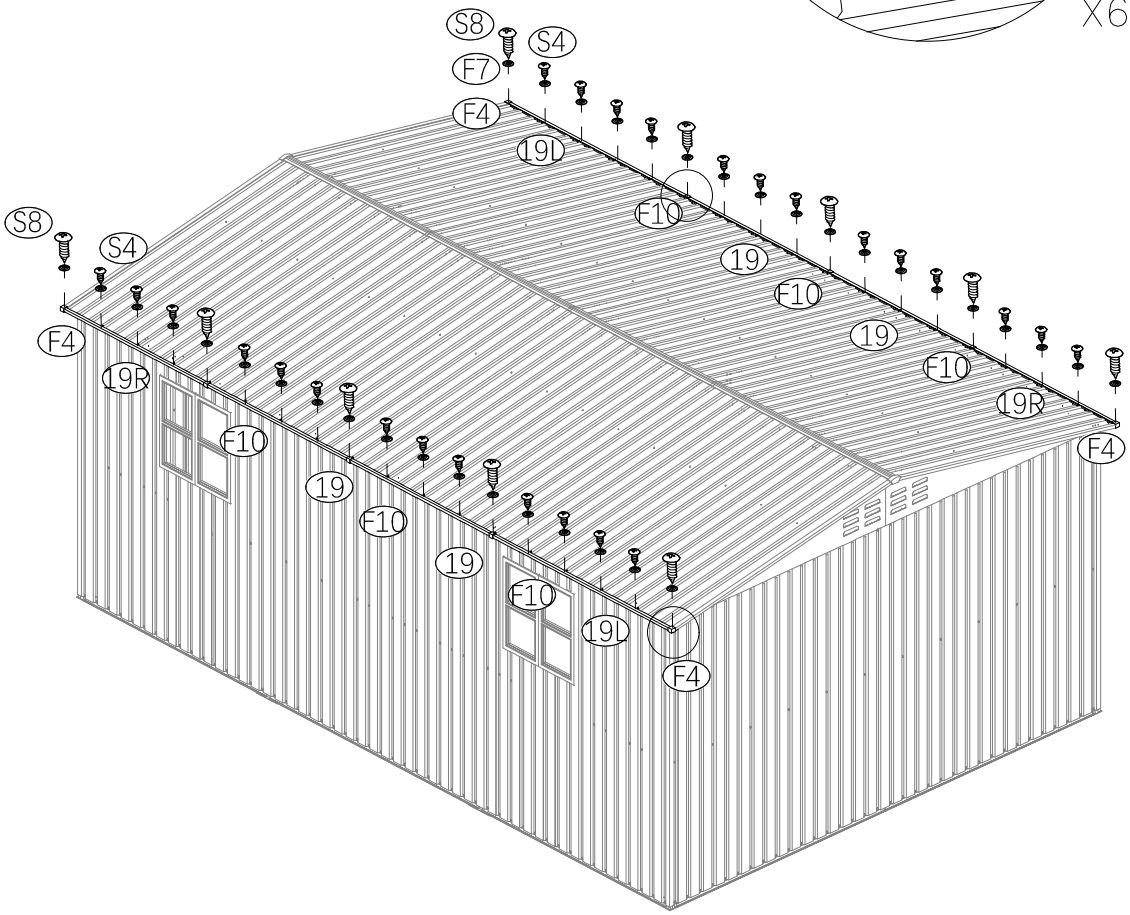


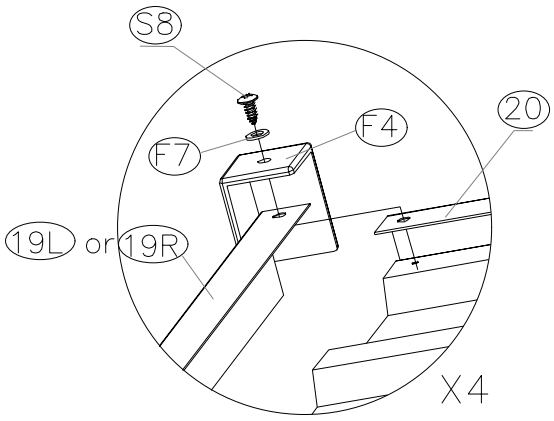


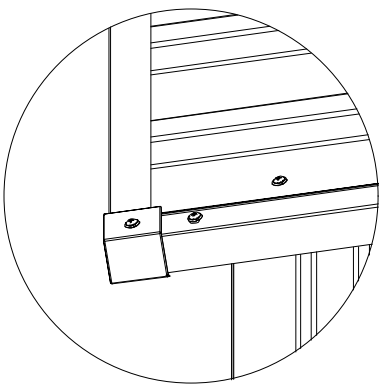



| | | | | | |
|---|---|---|---|---|---|
| F4 |  | 4 | S4 |  | 26 |
| F10 |  | 6 | S8 |  | 10 |
| 19 |  | 4 | F7 |  | 36 |
| 19L |  | 2 | | | |
| 19R |  | 2 | | | |



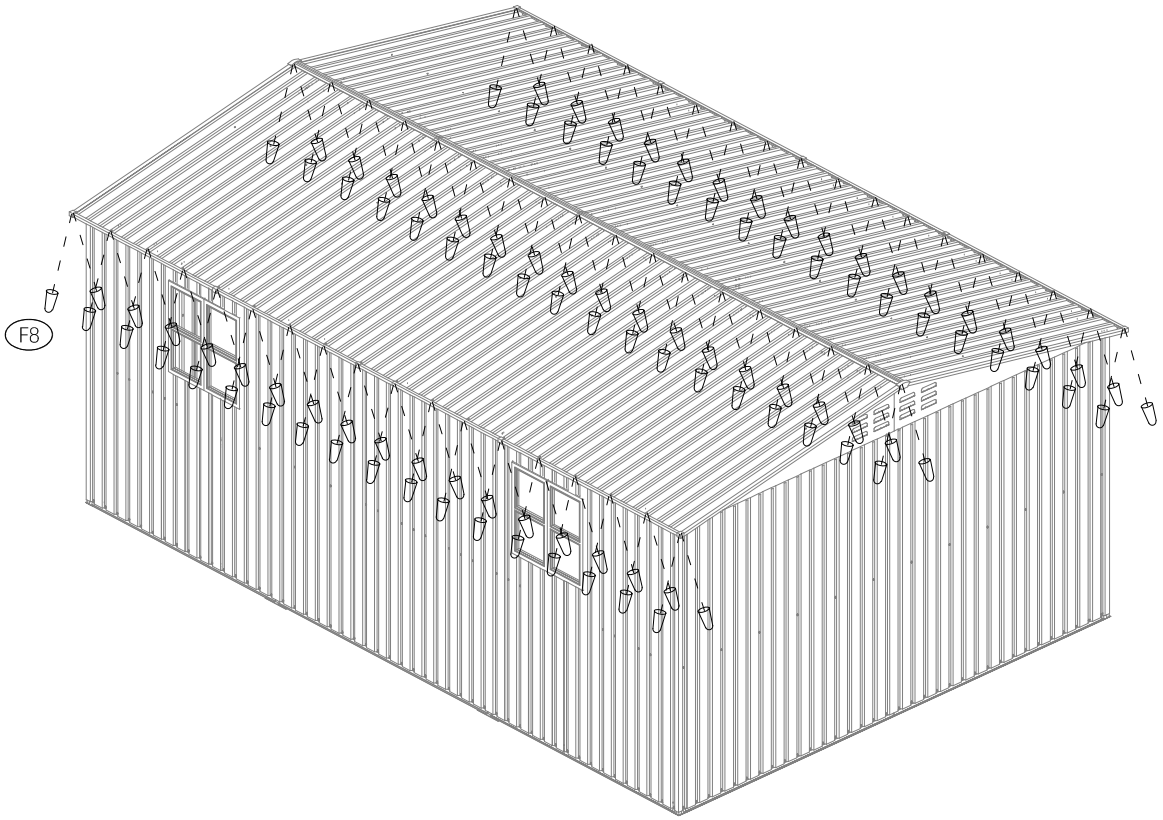



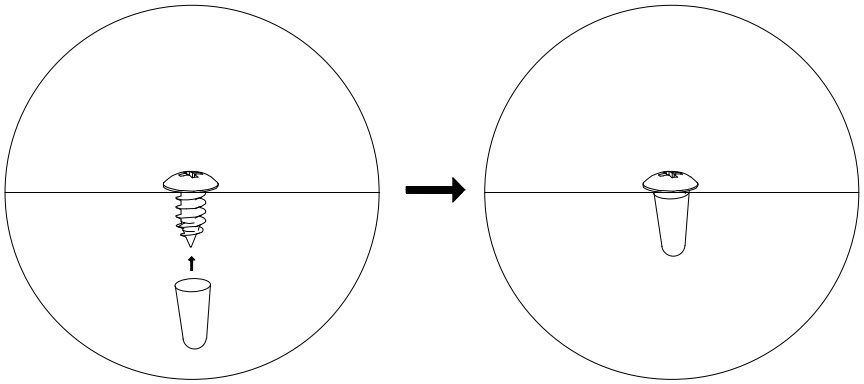



| F8 |  | 108 |
|---|---|---|

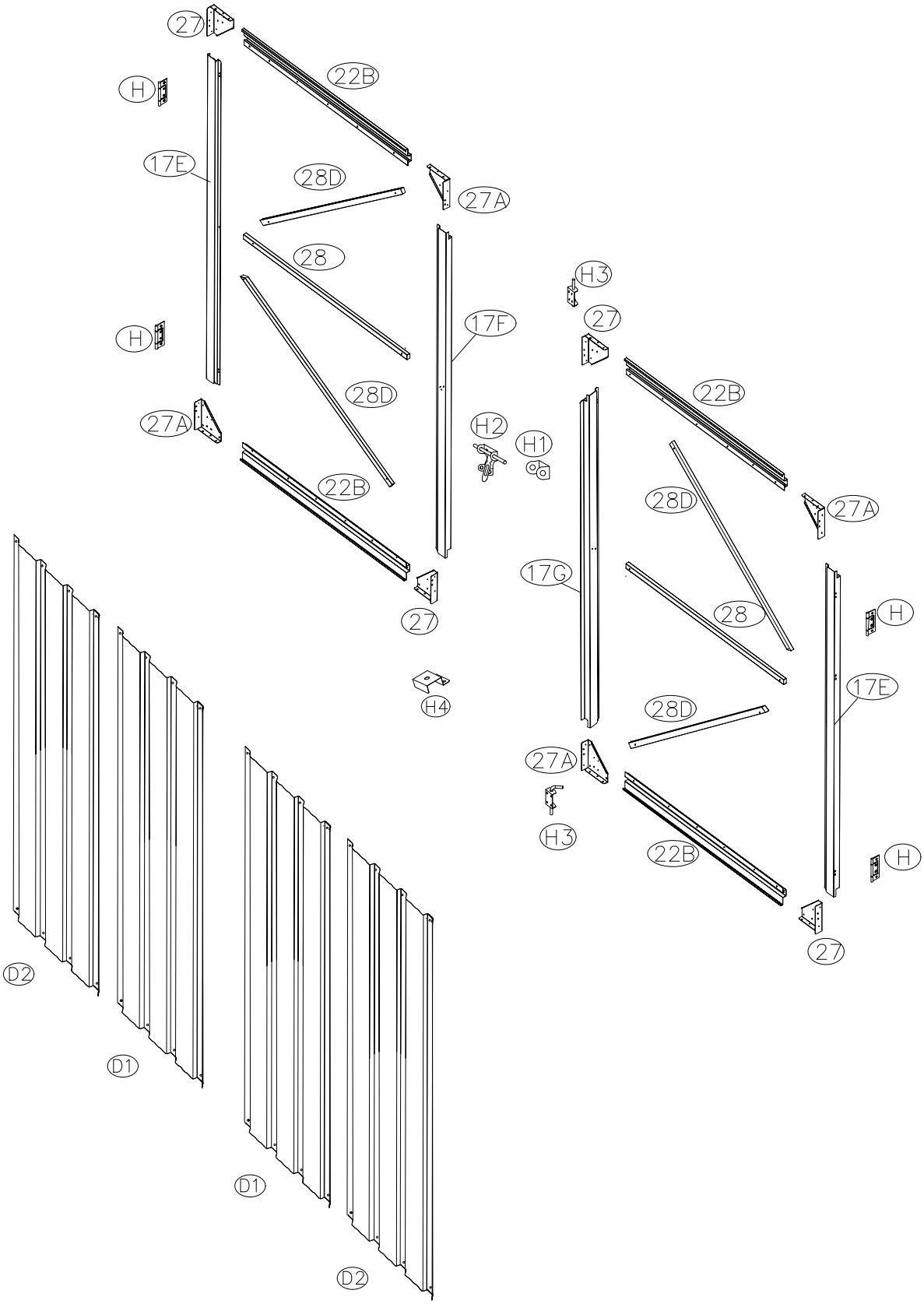
STEP 54



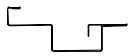



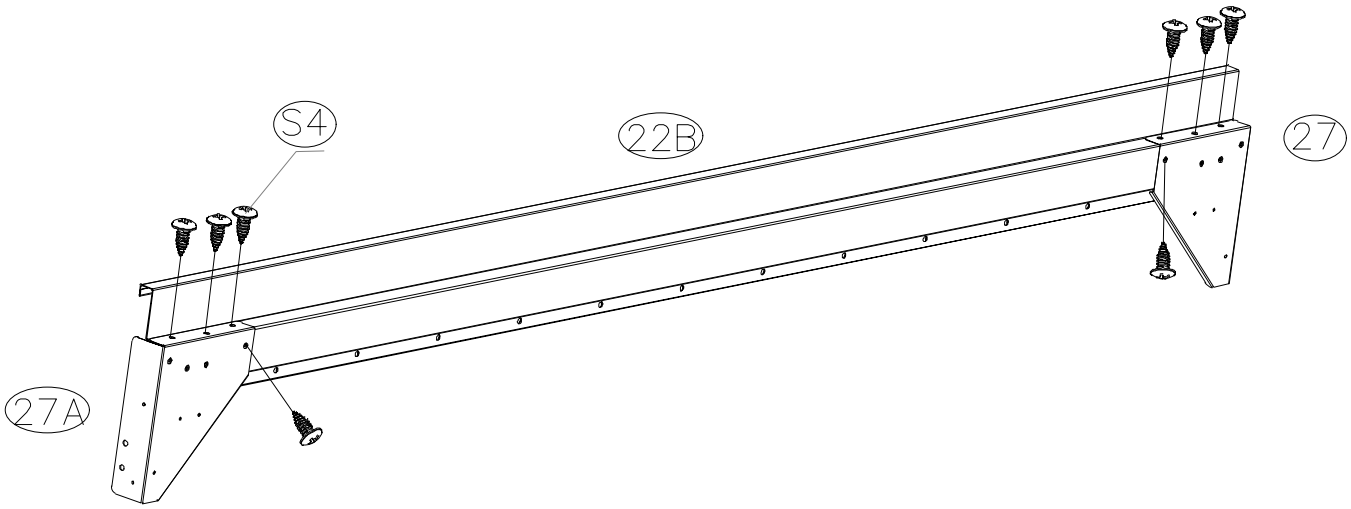
# Part 6 :

## Door Installation



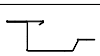
STEP 55

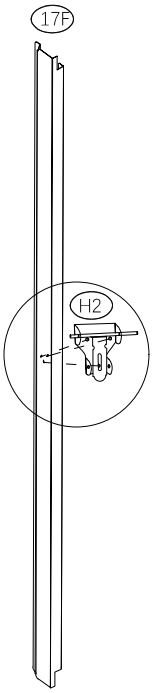
| | | |
|---|---|---|
| 22B |  | 4 |
| 27 |  | 4 |
| 27A |  | 4 |
| S4 |  | 32 |

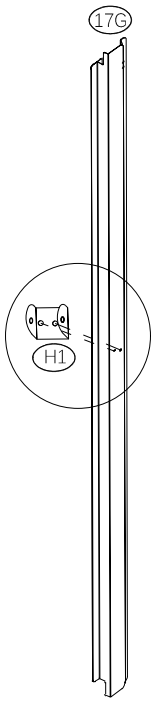


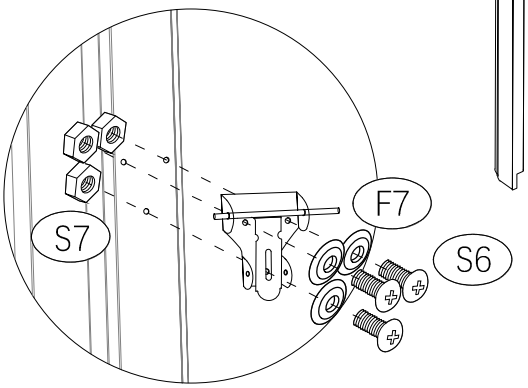

X4

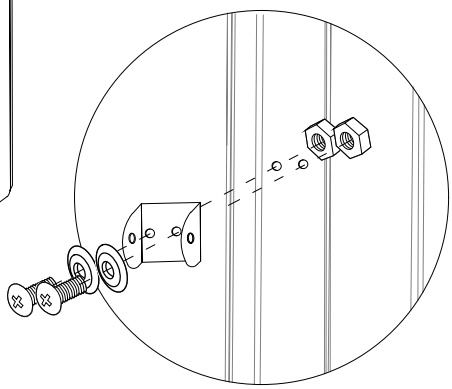
STEP 56

| | | |
|---|---|---|
| 17F |  | 1 |
| 17G |  | 1 |
| H1 |  | 1 |
| H2 |  | 1 |
| F7 |  | 5 |
| S6 |  | 5 |
| S7 |  | 5 |



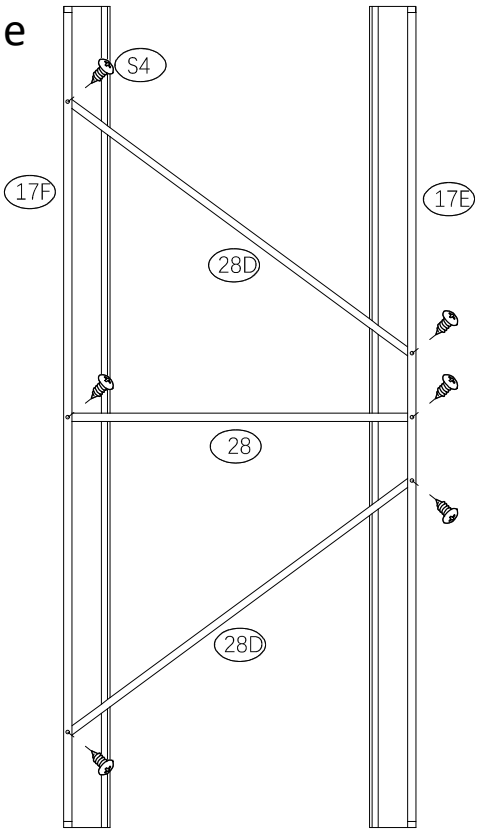



STEP 57

| | | |
|---|---|---|
| 17F | | 1 |
| 17E | | 1 |
| 28 | | 1 |
| 28D | | 2 |
| S4 | | 6 |

Left Door

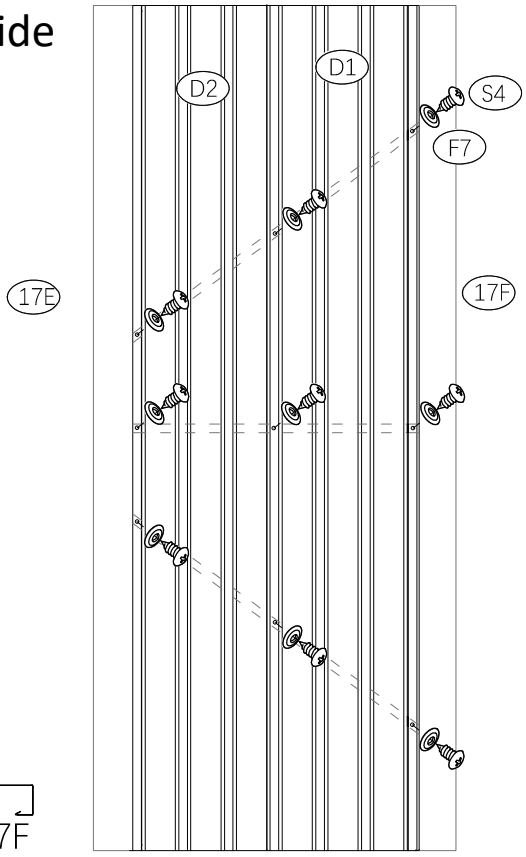
Inside

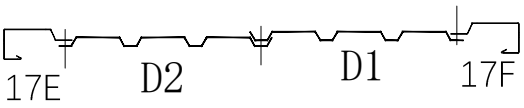



STEP 58

| | | |
|---|---|---|
| D1 | | 1 |
| D2 | | 1 |
| S4 | | 9 |
| F7 | | 9 |

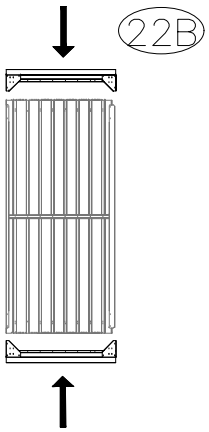
Outside



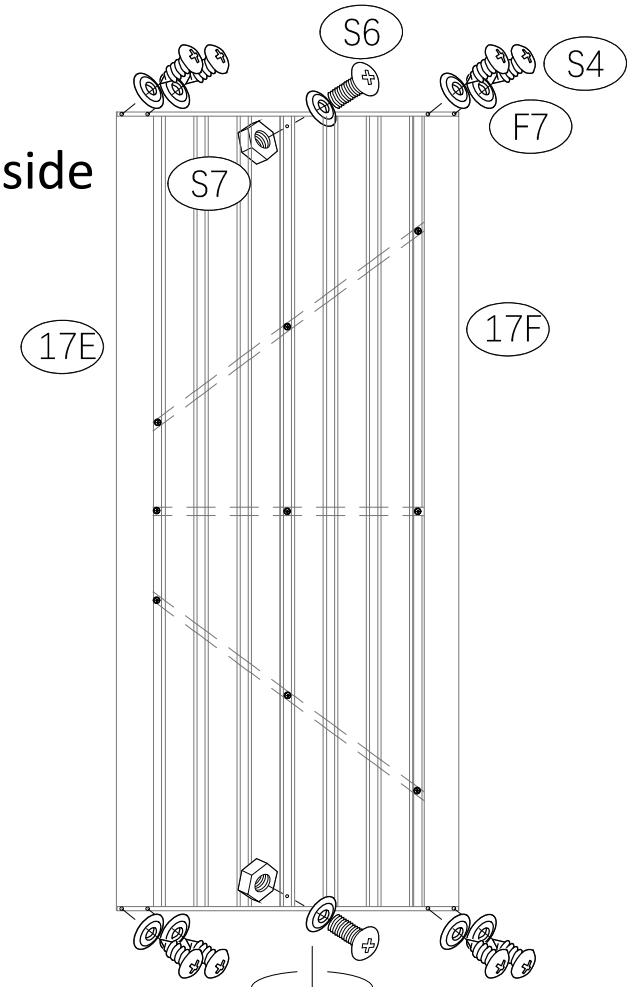



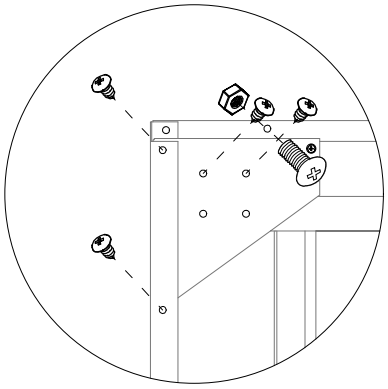
STEP 59

| | | |
|---|---|---|
| S4 |  | 24 |
| F7 |  | 10 |
| S6 |  | 8 |
| S7 |  | 8 |

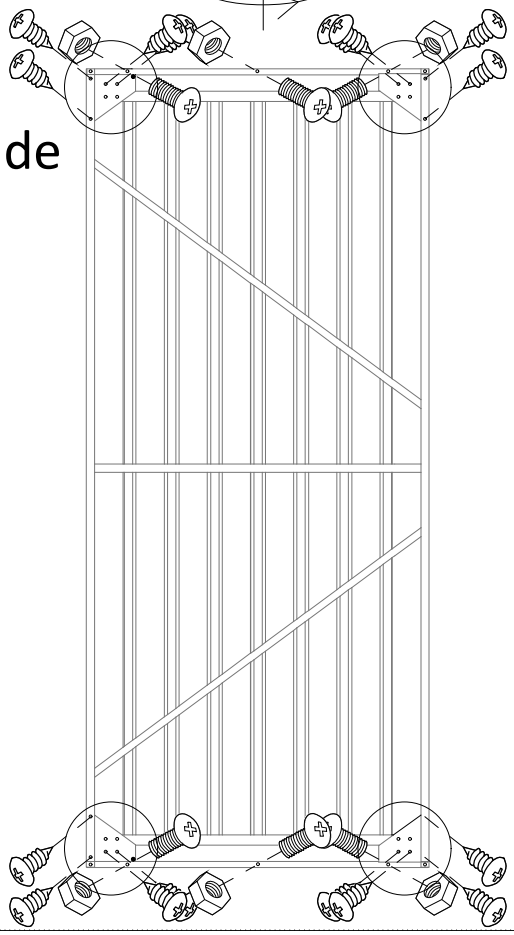



Outside



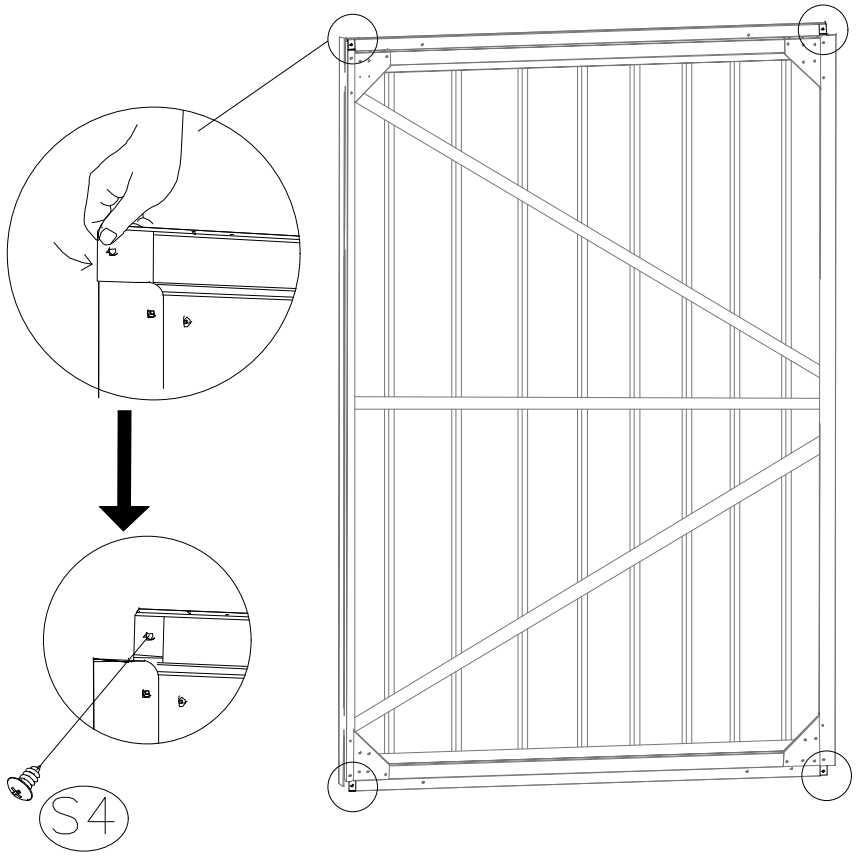



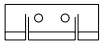
Inside



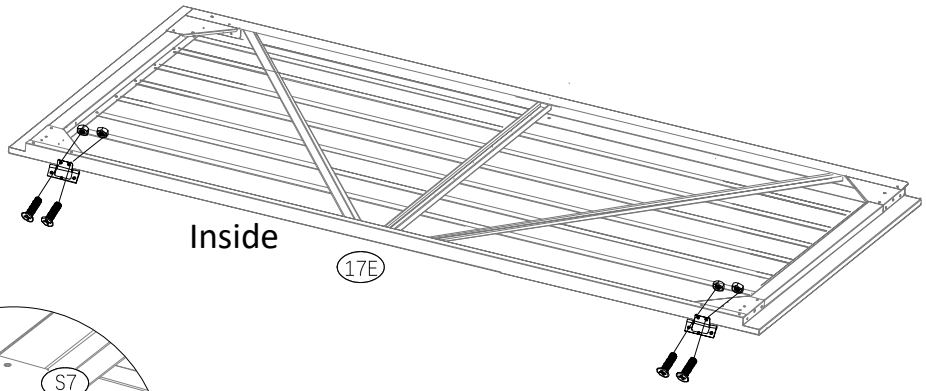
| | | |
|---|---|---|
| S4 |  | 4 |

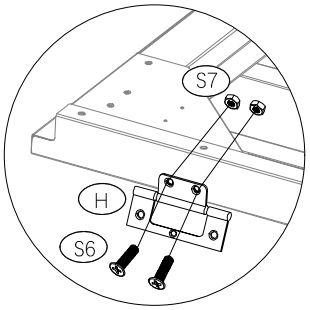
STEP 60




| | | |
|---|---|---|
| H |  | 2 |
| S6 |  | 4 |
| S7 |  | 4 |

STEP 61



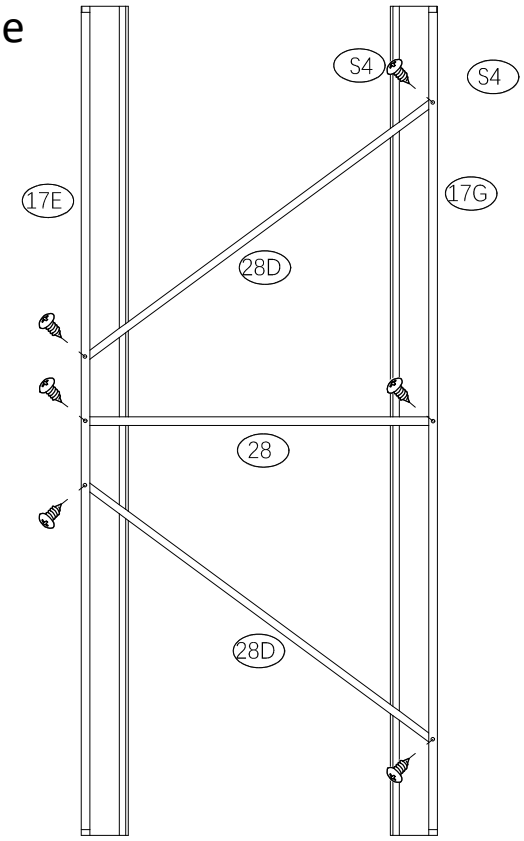



STEP 62

| | | |
|---|---|---|
| 17G | | 1 |
| 17E | | 1 |
| 28 | | 1 |
| 28D | | 2 |
| S4 | | 6 |

## Left Door

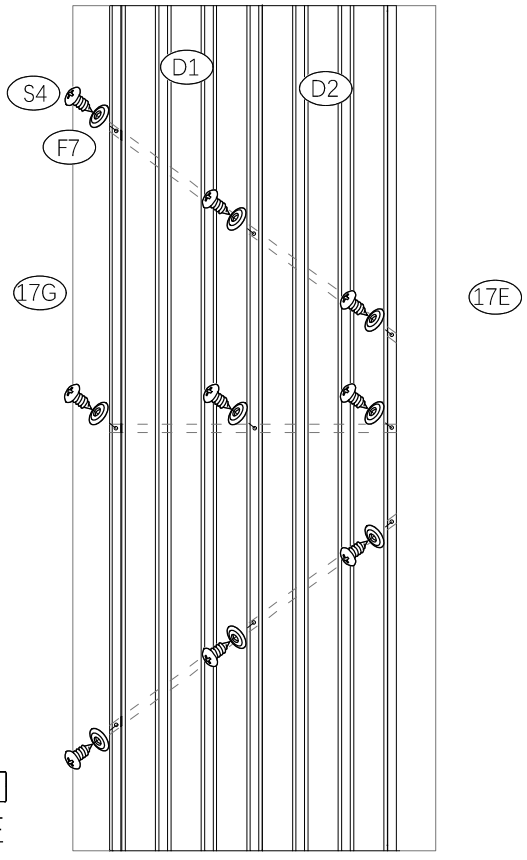
### Inside

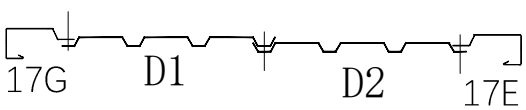


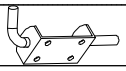

STEP 63

| | | |
|---|---|---|
| D1 | | 1 |
| D2 | | 1 |
| S4 | | 9 |
| F7 | | 9 |

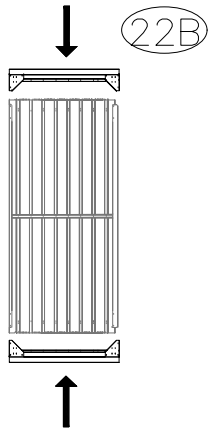
### Outside

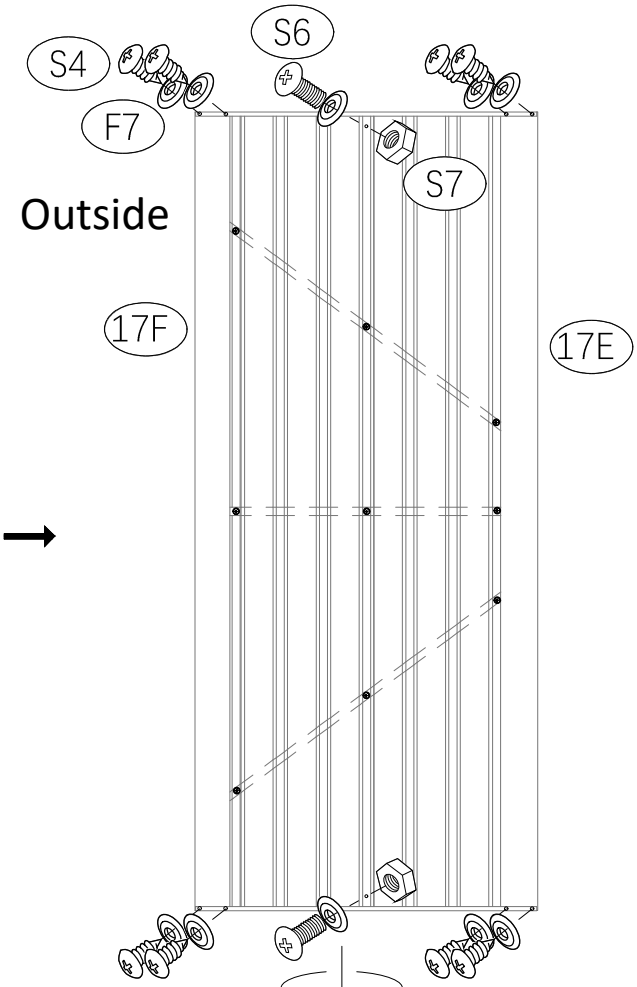


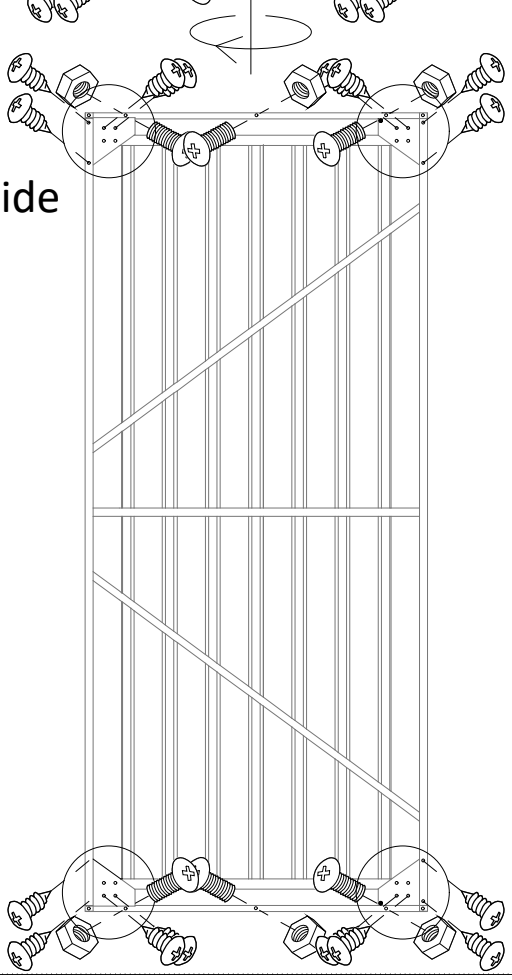



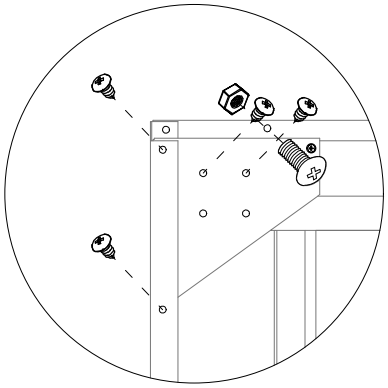
| | | |
|---|---|---|
| H3 |  | 2 |
| S4 |  | 28 |
| F7 |  | 10 |
| S6 |  | 8 |
| S7 |  | 8 |

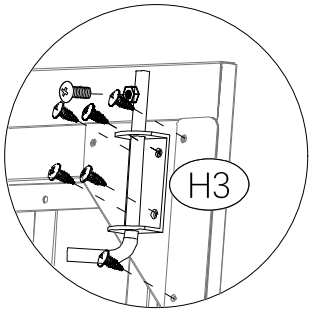


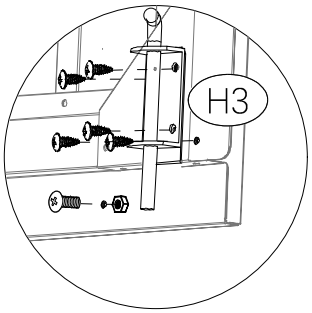


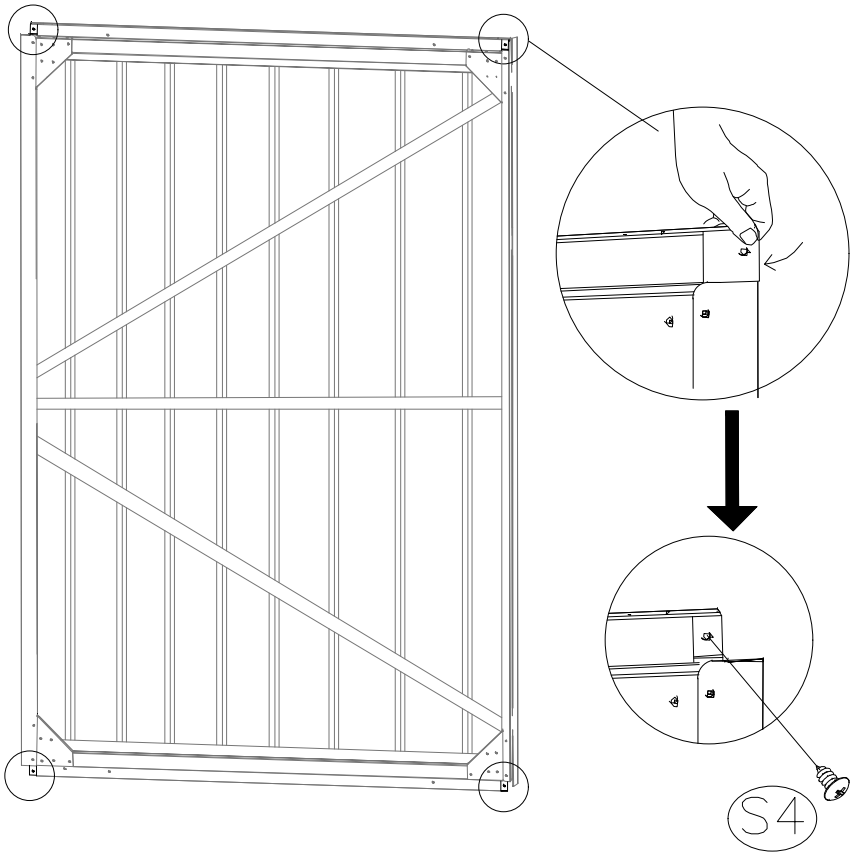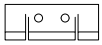





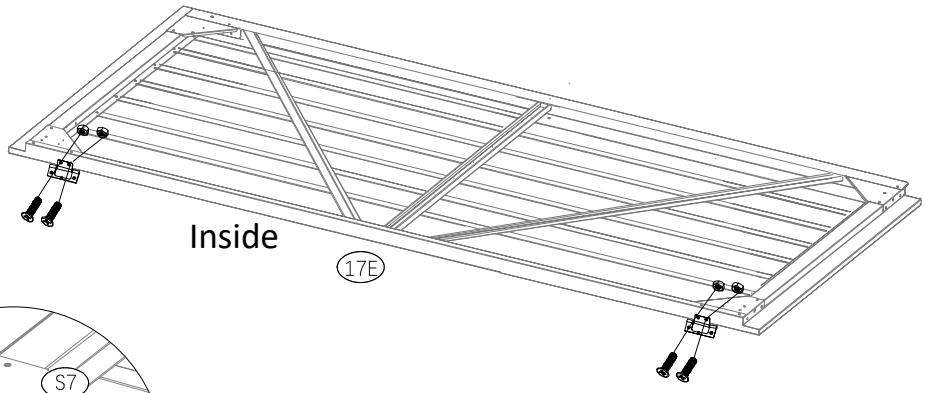
| | | |
|---|---|---|
| S4 |  | 4 |

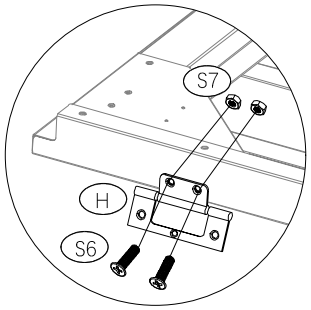
STEP 65




| | | |
|---|---|---|
| H |  | 2 |
| S6 |  | 4 |
| S7 |  | 4 |

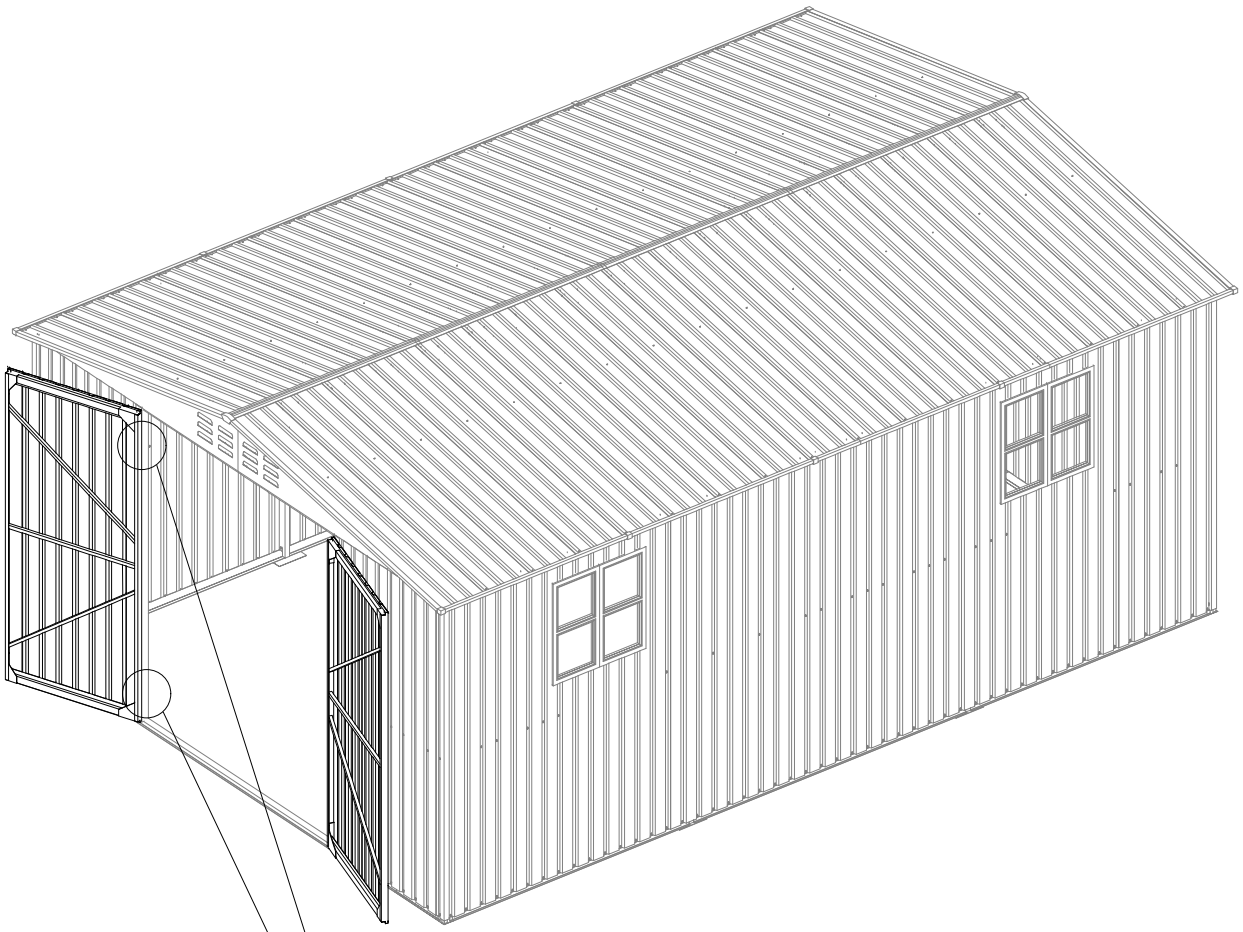
STEP 66

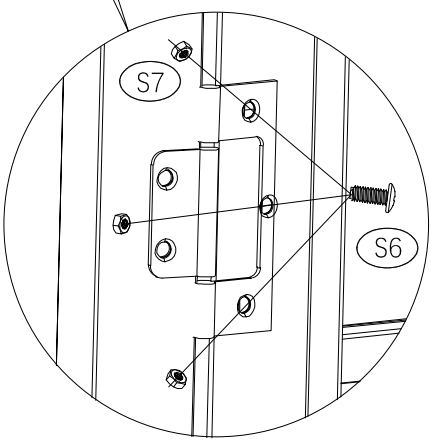


| | | |
|---|---|---|
| S6 |  | 12 |
| S7 |  | 12 |

STEP 67





| | | |
|---|---|---|
| Y1L |  | 1 |
| Y1R |  | 1 |

