DOUBLE DOOR
" TRANSPARENT " CABINET

TEMPERED GLASS

WINE CABINET / DISPLAY CABINET

(NV028DX)

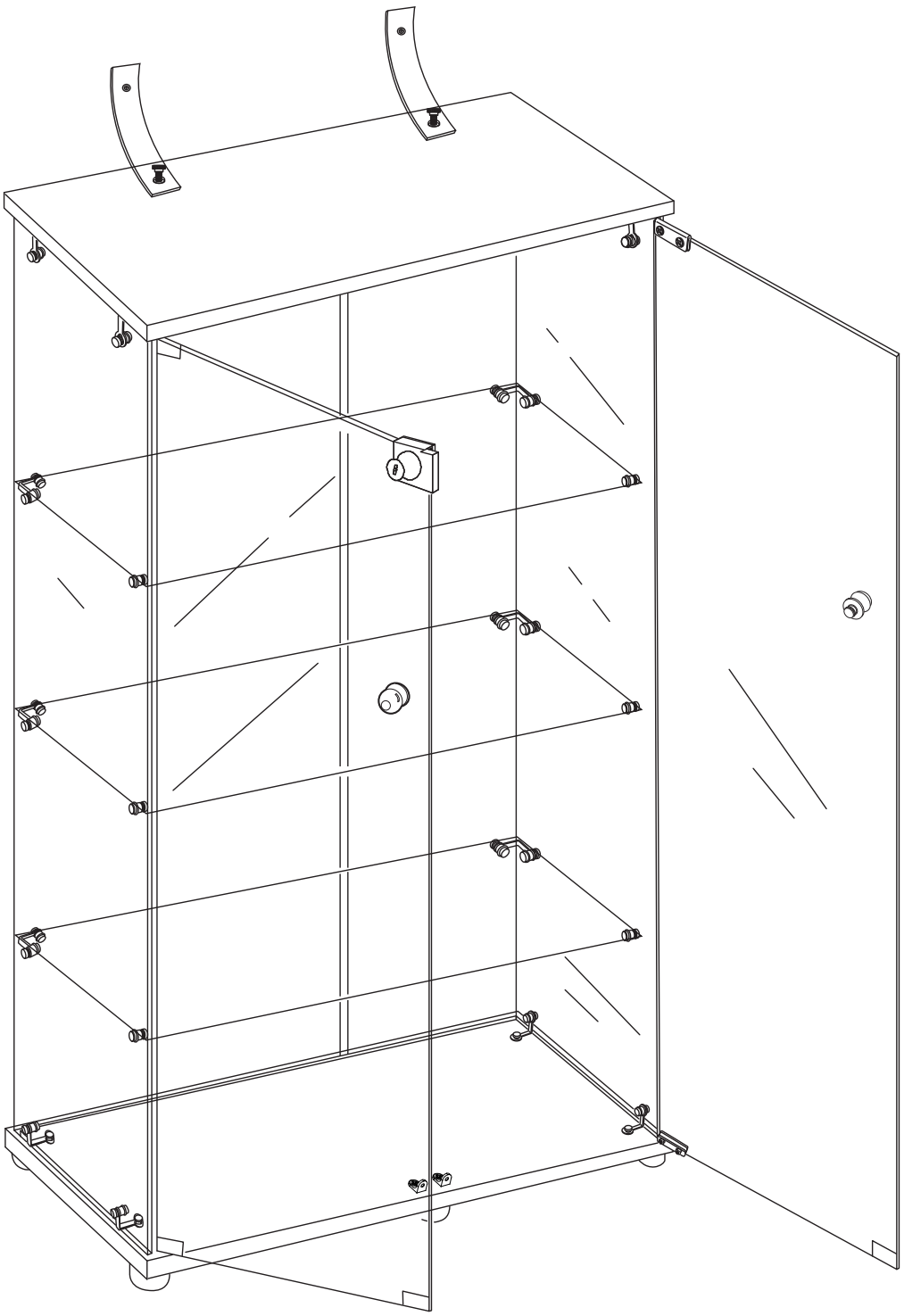

ENGLISH

GOOD TO KNOW ABOUT TEMPERED GLASS

IMPORTANT :

HANDLE WITH CARE! A DAMAGED EDGE OR SCRATCHED SURFACE CAN IN EXCEPTIONAL CASES CAUSE THE GLASS TO CRACK SUDDENLY. HOWEVER, NEVER INTO SHARP FRAGMENTS, ONLY INTO SMALL PIECES. AVOID COLLISIONS FROM THE SIDE – THIS IS THE MOST FRAGILE PART OF THE GLASS.

WARNING

FURNITURE TIPPING-OVER COULD RESULT IN INJURY OR DEATH TO THE INSTALLER.

ALWAYS SECURE THIS PRODUCT PERMANENTLY TO THE WALL.

The only wall mount included in the package is suitable for wooden walls or other solid walls.

For wooden walls, please only use the screws, the included plastic screw accessory is only an option. For hard walls, please drill holes with a hammer and then insert the screws and plastic accessories. The included wall mount is not suitable for walls with weak holding force, such as plasterboard. To attach this product to the plasterboard, please make sure the screws are securely fastened to the keel. Please choose the proper safety devices according to the type of wall in your house.

1. Tempered glass has a 0.3% risk of self-explosion. In case of such an accident, please contact us and we will replace the damaged glass. During installation, please wear gloves, long-sleeved shirts, pants and socks to avoid possible injury.

2. To avoid possible accidents, please keep children away during installation. Please make sure that the installation is done by two adults.

3. During installation, use cardboard or carpet as a buffer layer to prevent the glass corner from colliding with hard objects such as the floor. Especially when installing tempered glass, make sure the corners do not hit the floor to prevent the tempered glass from exploding due to force changes.

4. When installing a display case, install the anti-tilt device first to avoid possible serious or fatal injury. To prevent possible tipping over, the display case must be permanently attached to the wall. Wall mounting is not limited to the fixtures we offer. You are free to install similar fixtures to avoid possible hazards.

5. DO NOT operate the cabinet door frequently, and DO NOT shake the cabinet to avoid the risk of colliding with the cabinet door or dropping objects. Again, install an anti-tipping device and keep children away (at least 2 meters/6.6 feet away)from this display case. Please also install a door lock to avoid possible injury from accidental operation by children.

6. The top/bottom panel of this cabinet is made of MFC/PVC-covered particle board, which is not fireproof.

7. For disposal, please contact the relevant local authorities or qualified companies.

8. The product is a partially transparent tempered glass display case, it is not fully transparent. After installation, the distance may be different due to the different fixing forces.

9. No part of this product can be swallowed, played with, or used for other purposes.

10. Please adjust the footrest on the product after installation. The maximum load of the glass plate is 8.00 kg/17.64 lbs. Note that the load capacity is for stored items only.

11. Product dimensions may have a tolerance of 10 mm/0.4 inch due to different measuring tools or methods.

12. After installing the cabinet, check and tighten all screws to avoid potential safety hazards, such as shelves falling and cabinet structures becoming loose due to loose screws.

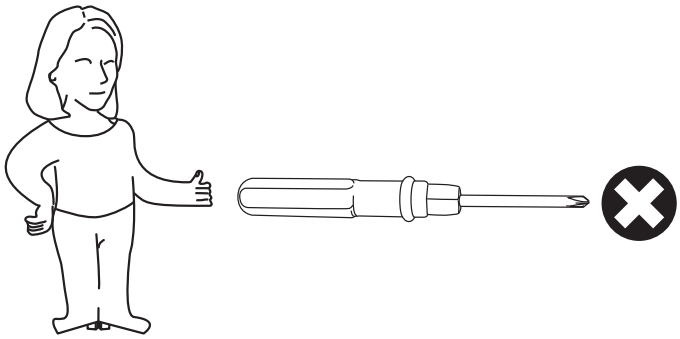

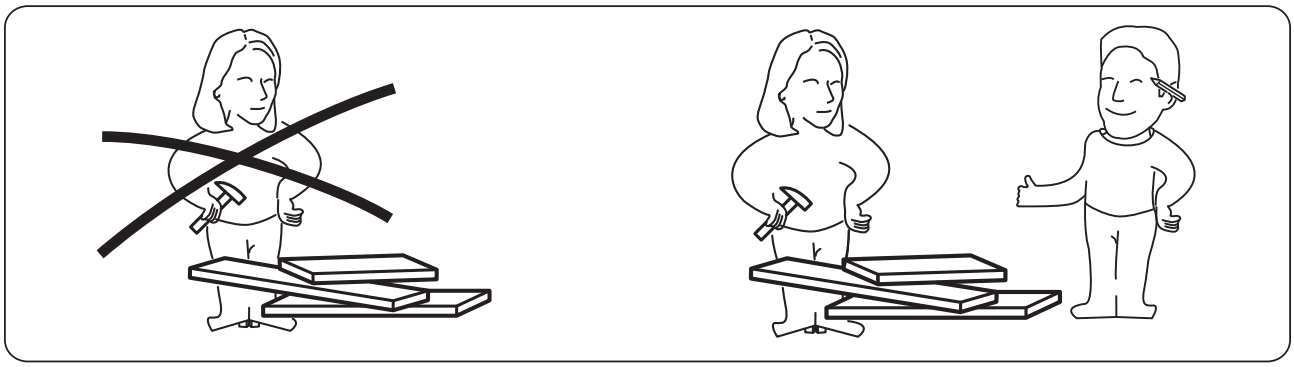

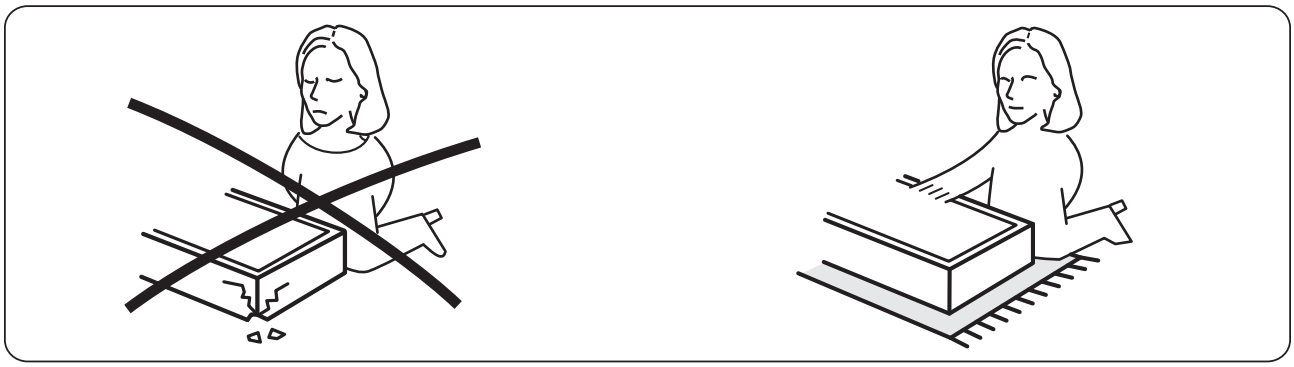

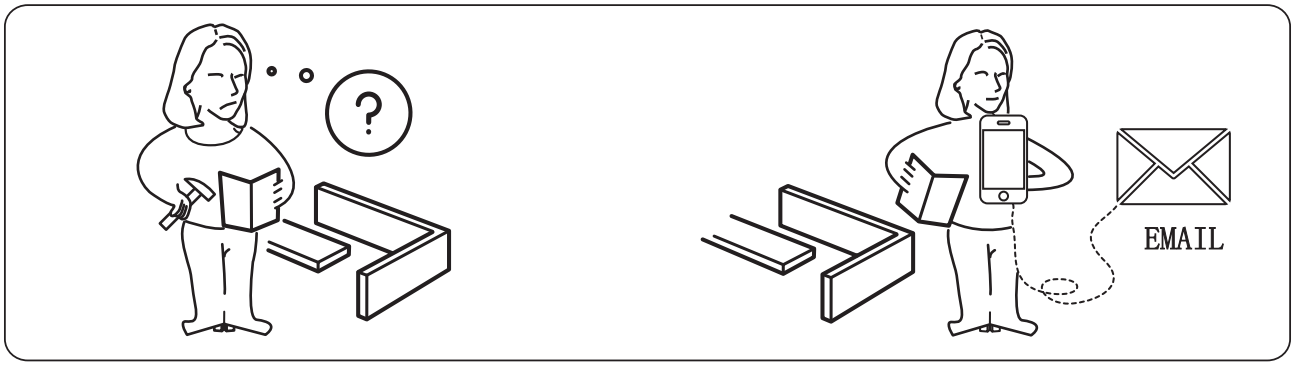
?
EMAIL

PRODUCT COMPONENT LIST

NO	ASSEMBLY	SIZE	NUMBER	TEXTURE OFMATERIAL
1	Back glass	1570*387mm(δ4mm)	2	Tempered glass
2	Side glass	1570*345mm(δ4mm)	2	
3	Door glass	1550*383mm(δ5mm)	2	
4	Shelf glass	772*315mm(δ5mm)	3	
5	Top plate	805*365mm(δ18mm)	1	MFC/PVC edge banding
6	bottom plate	805*365mm(δ18mm)	1	MFC/PVC edge banding
7	Accessory Package	Various specifications	X	Various materials

! Product dimensions may have an error with 10mm due to the usage of different measuring tools or methods.

CAUTION

- Be sure to carefully remove all parts from the carton and ensure that there are no damages to any of them.
- The hardware should be kept away from children when unpacking and assembling this product. Two adults are recommended for assembly.
- Follow the instructions in the instruction manual carefully and strictly to ensure that the product is assembled and operates as intended.
- Do not tighten all the screws until all the adjacent parts have been properly connected. Please do not throw away extra screws.Please refer to the actual product for the screw hole position.

A	B	C	D
Connector A X6	Connector B X8	Anti-tipping device X2	Screwdriver X1
E	F	G	H
Nut X32	Screw X34	Gasket X32	Gasket X24
I	J	K	1570*387*4mm 1
Door clip set X2	Lock X1	Horn guard X1	Back glass X2
1570*345*4mm 2	1550*383*5mm 3	772*315*5mm 4	805*365*18mm 5
Side glass X2	Door glass X2	Shelf glass X3	Top panel X1
805*365*18mm 6	L	M	N
Bottom panel X1	Anchor X6	Door stopper X2	Screw X8
O Door stopper X2	GOOD TO KNOW ABOUT TEMPERED GLASS HANDLE WITH CARE! A DAMAGED EDGE OR SCRATCHED SURFACE CAN IN EXCEPTIONAL CASES CAUSE THE GLASS TO CRACK SUDDENLY. HOWEVER, NEVER INTO SHARP FRAGMENTS, ONLY INTO SMALL PIECES. AVOID COLLISIONS FROM THE SIDE – THIS IS WHERE THE GLASS IS MOST VULNERABLE.		

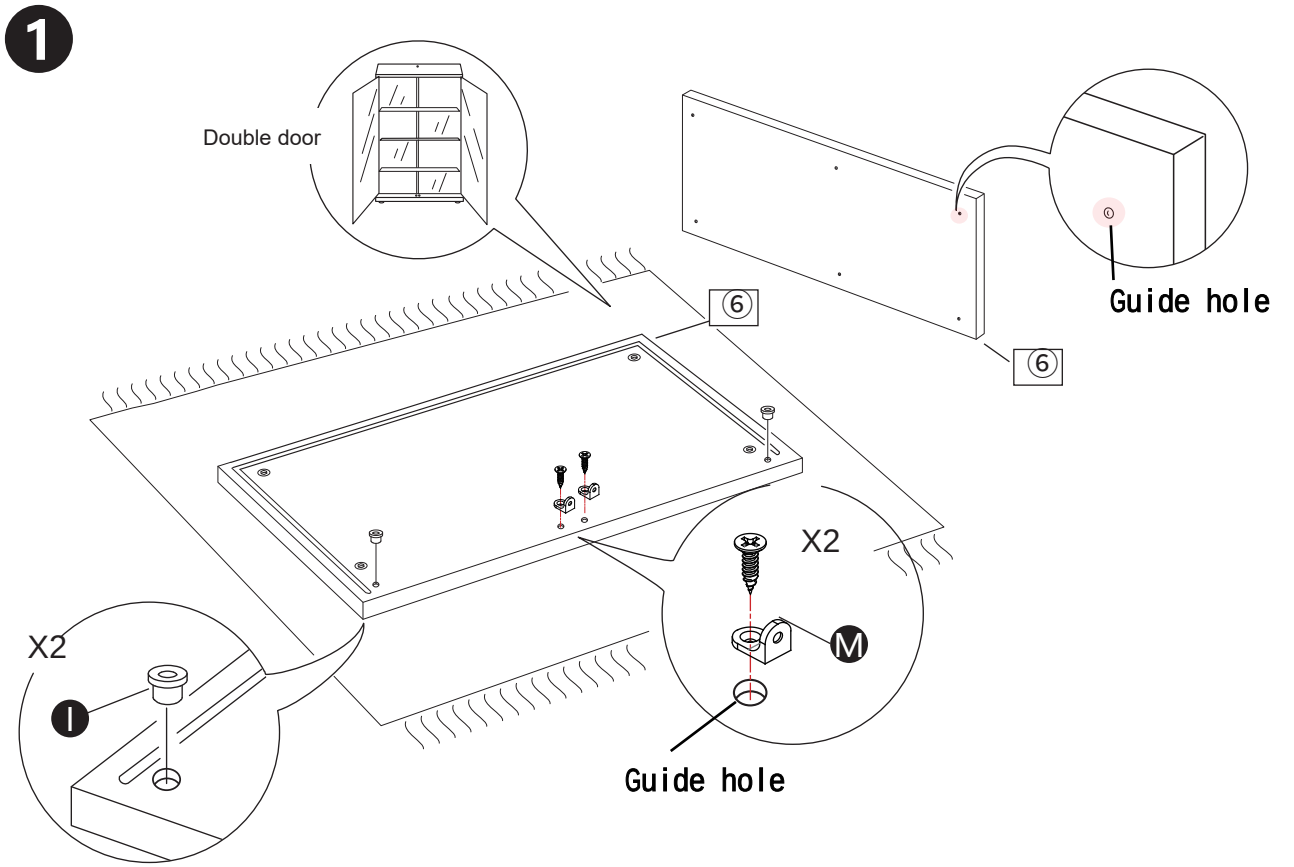
1
Double door
⑥
⑥
Guide hole
X2
M
X2
I
Guide hole

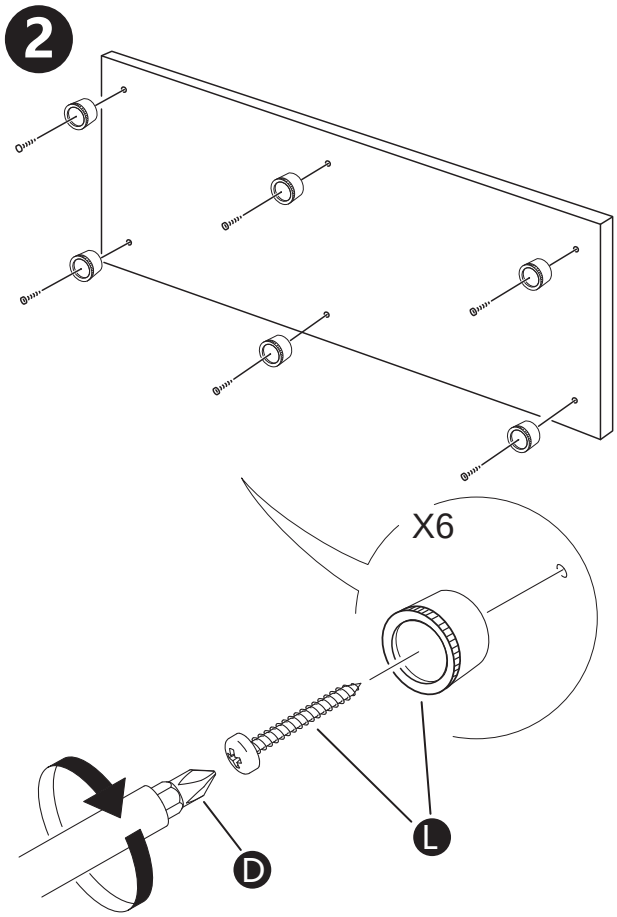
2
X6
D
L

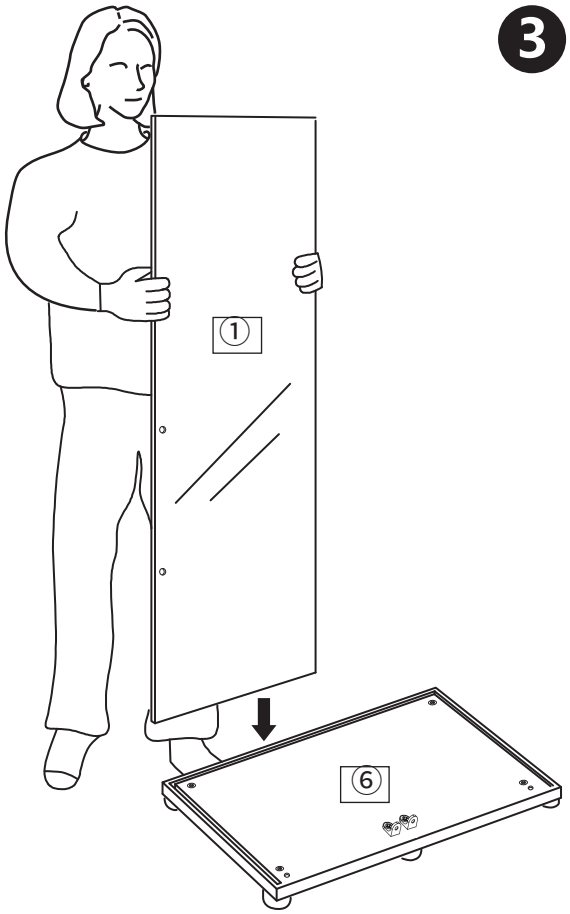
3
①
⑥

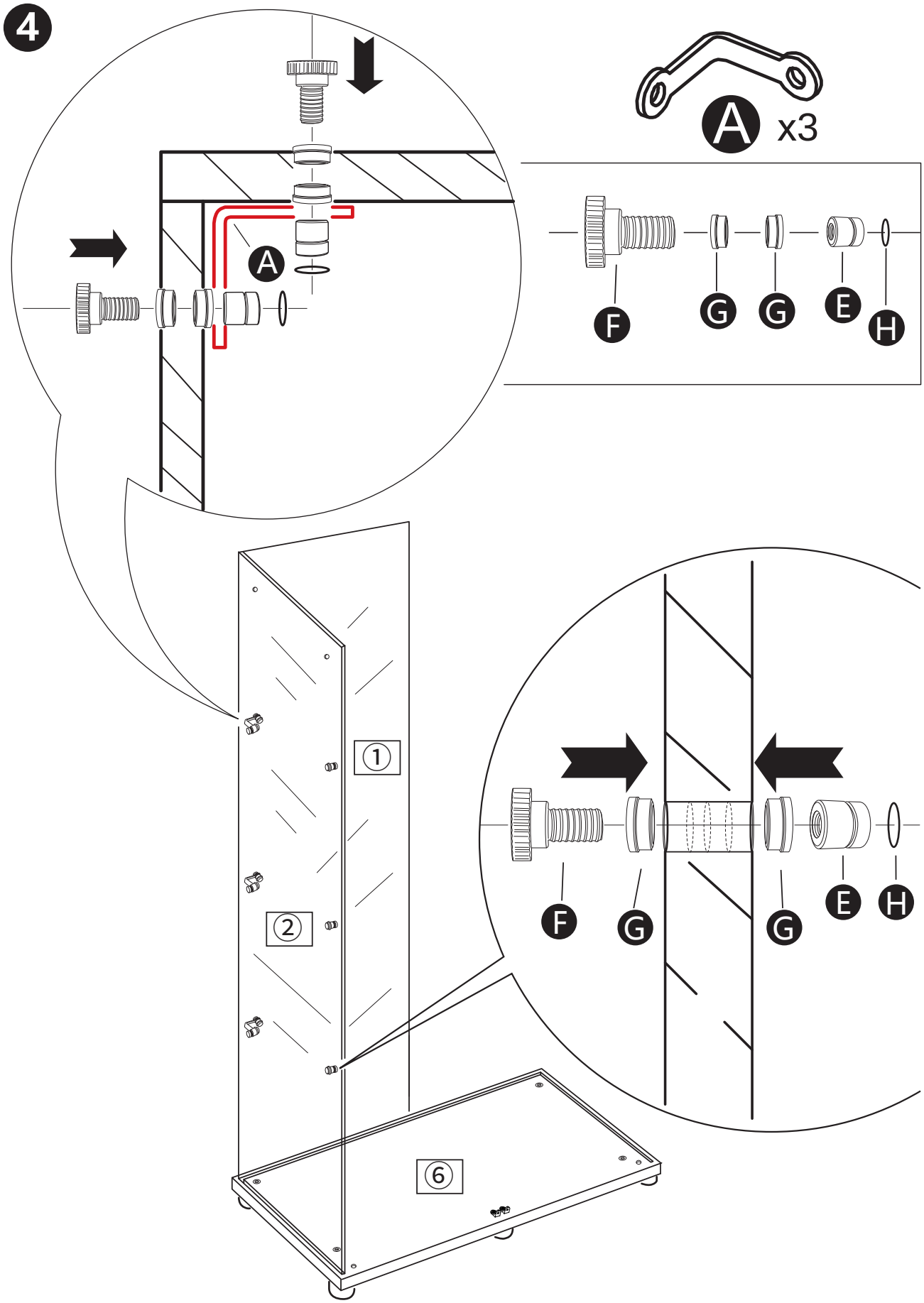
4
A
A x3
F
G
G
E
H
1
2
6
F
G
G
E
H

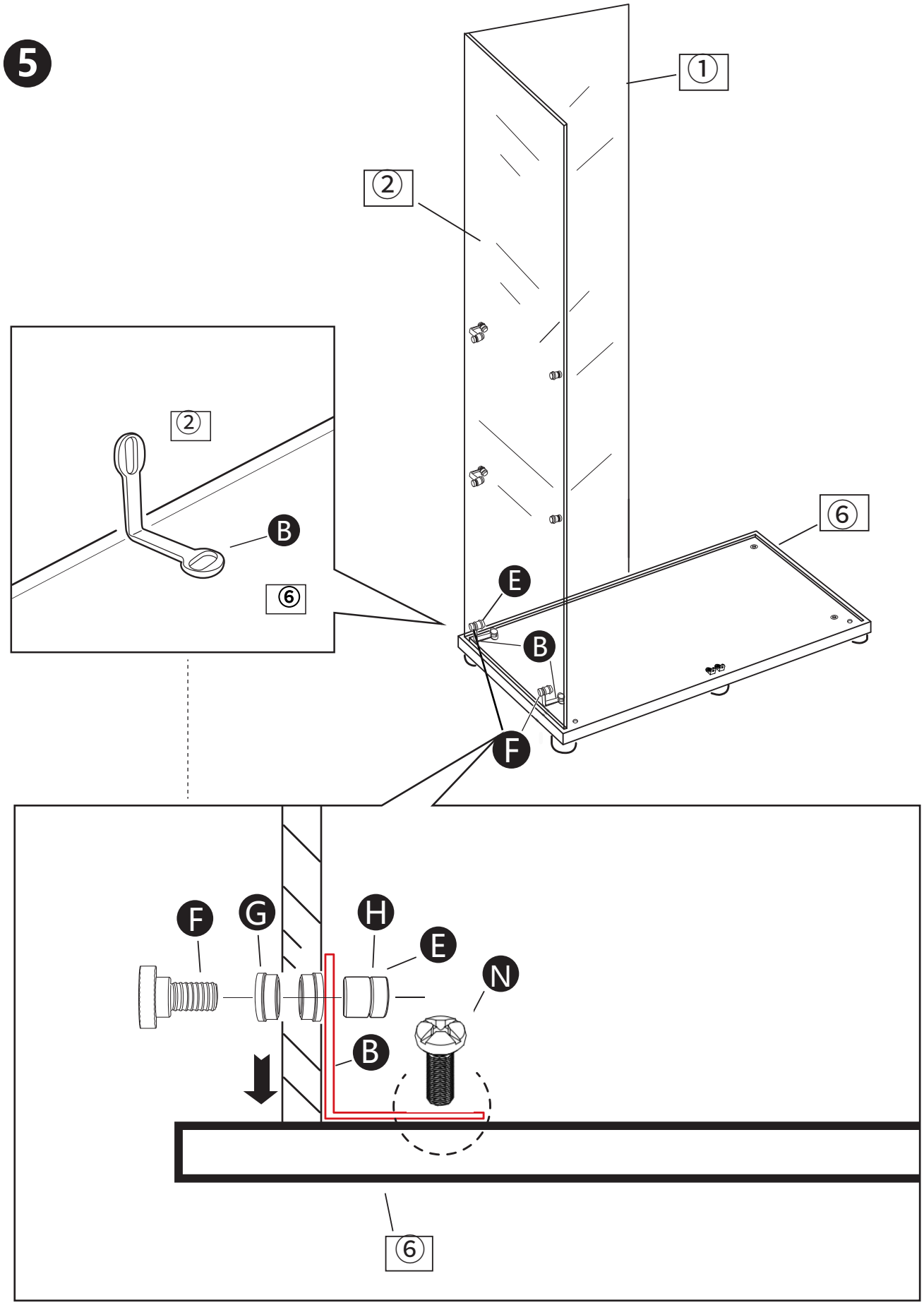
5
1
2
2
B
6
6
E
B
F
F
G
H
E
N
B
6

6

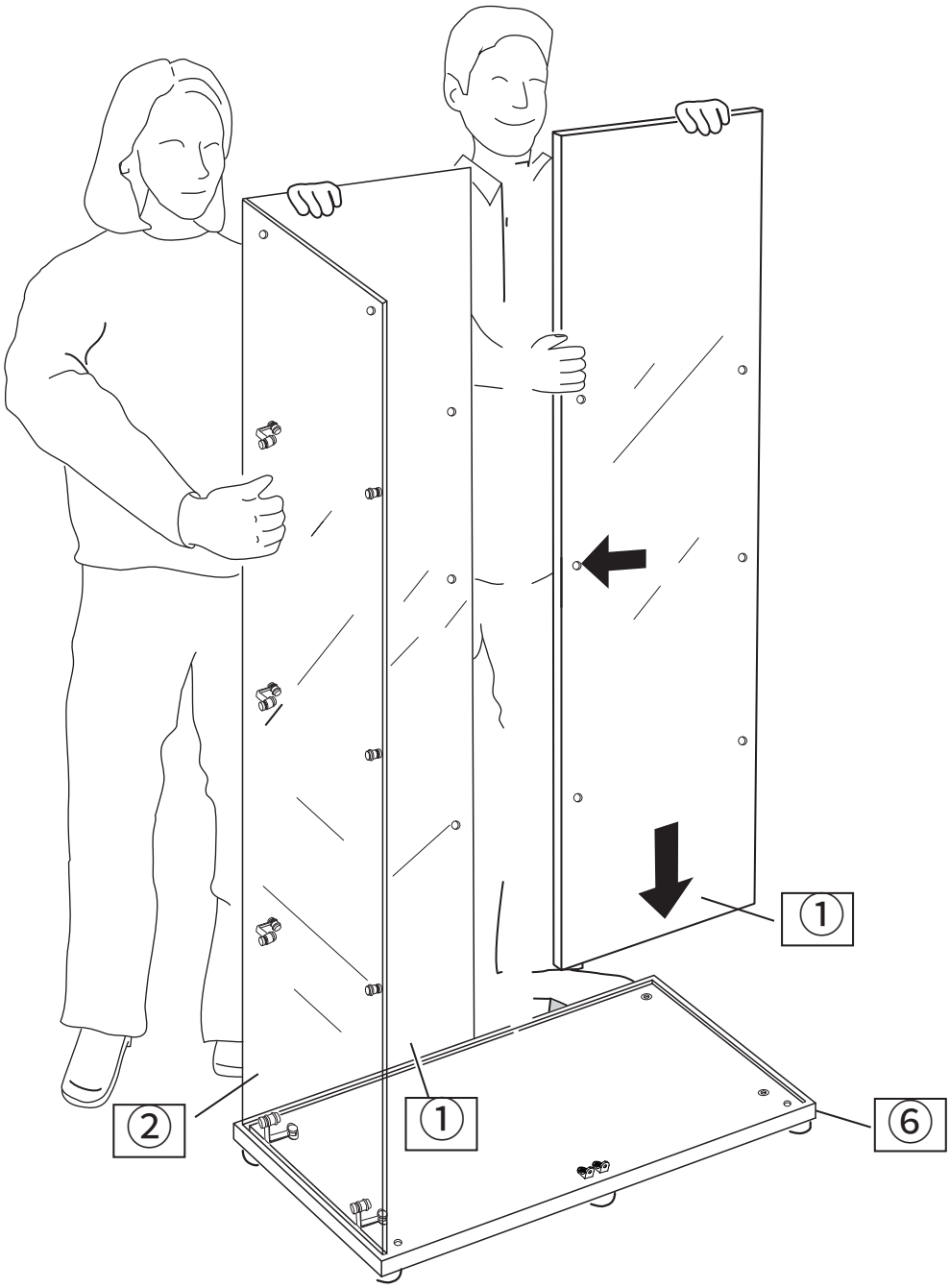

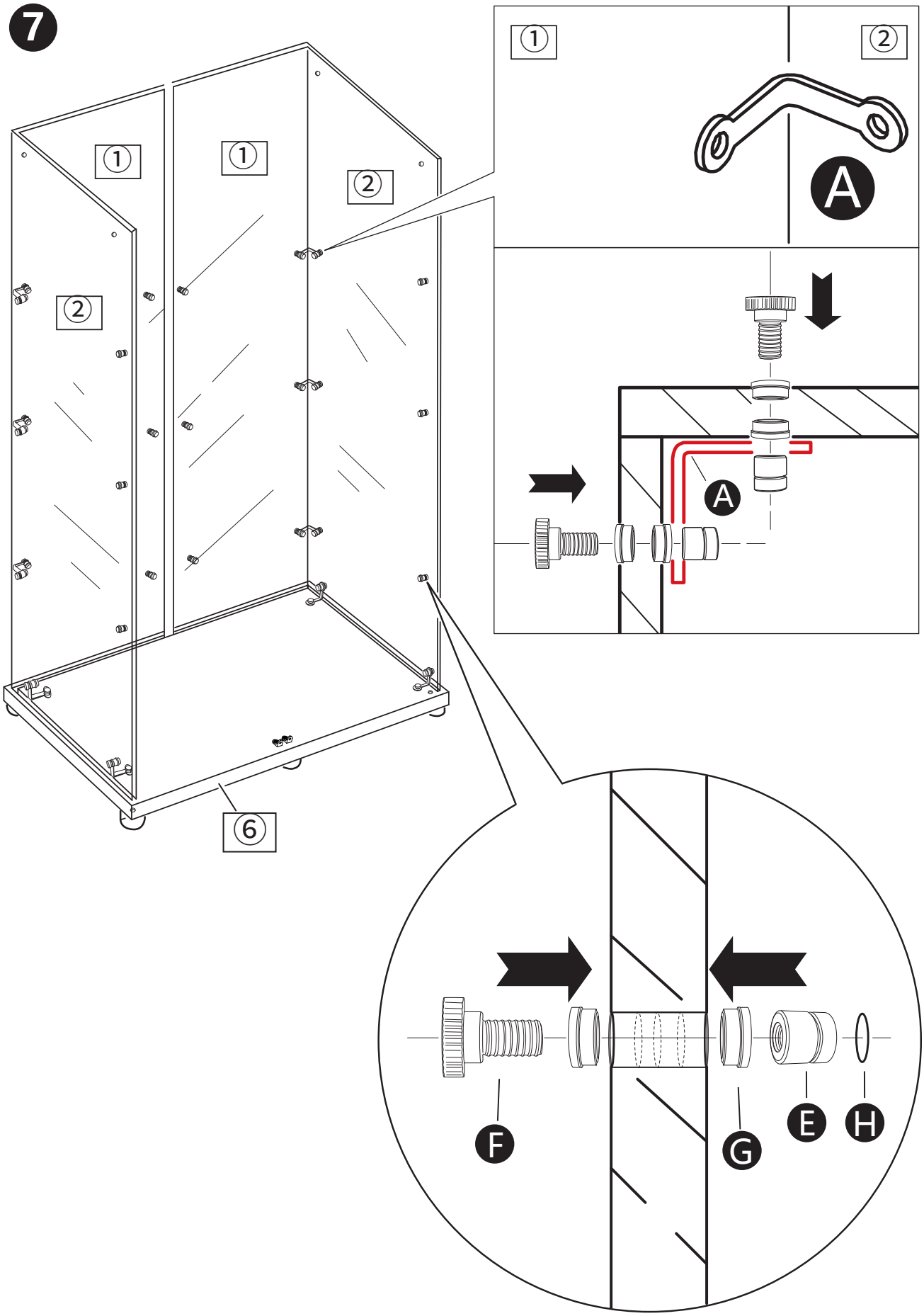
7
1
1
2
2
6
1
2
A
A
F
G
E
H

8

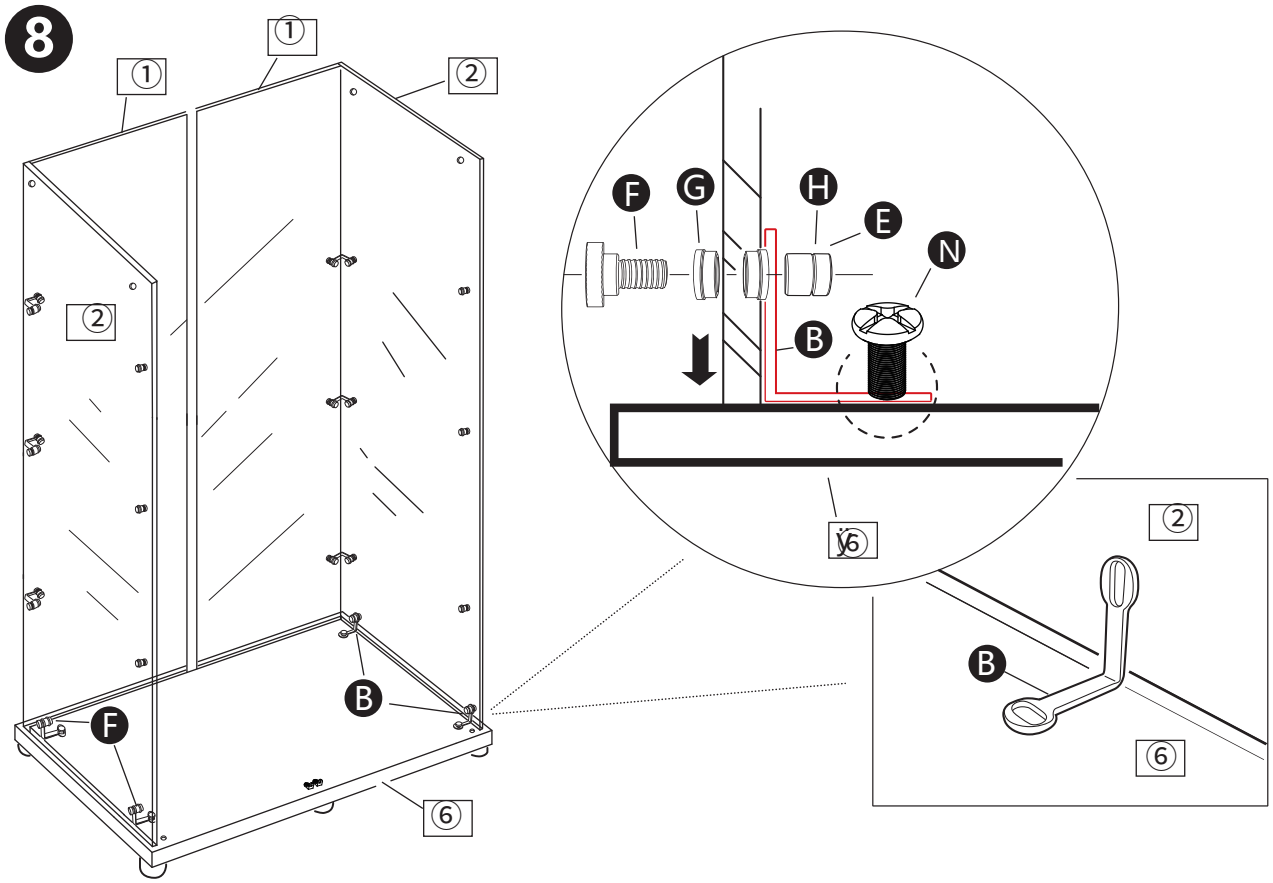

9

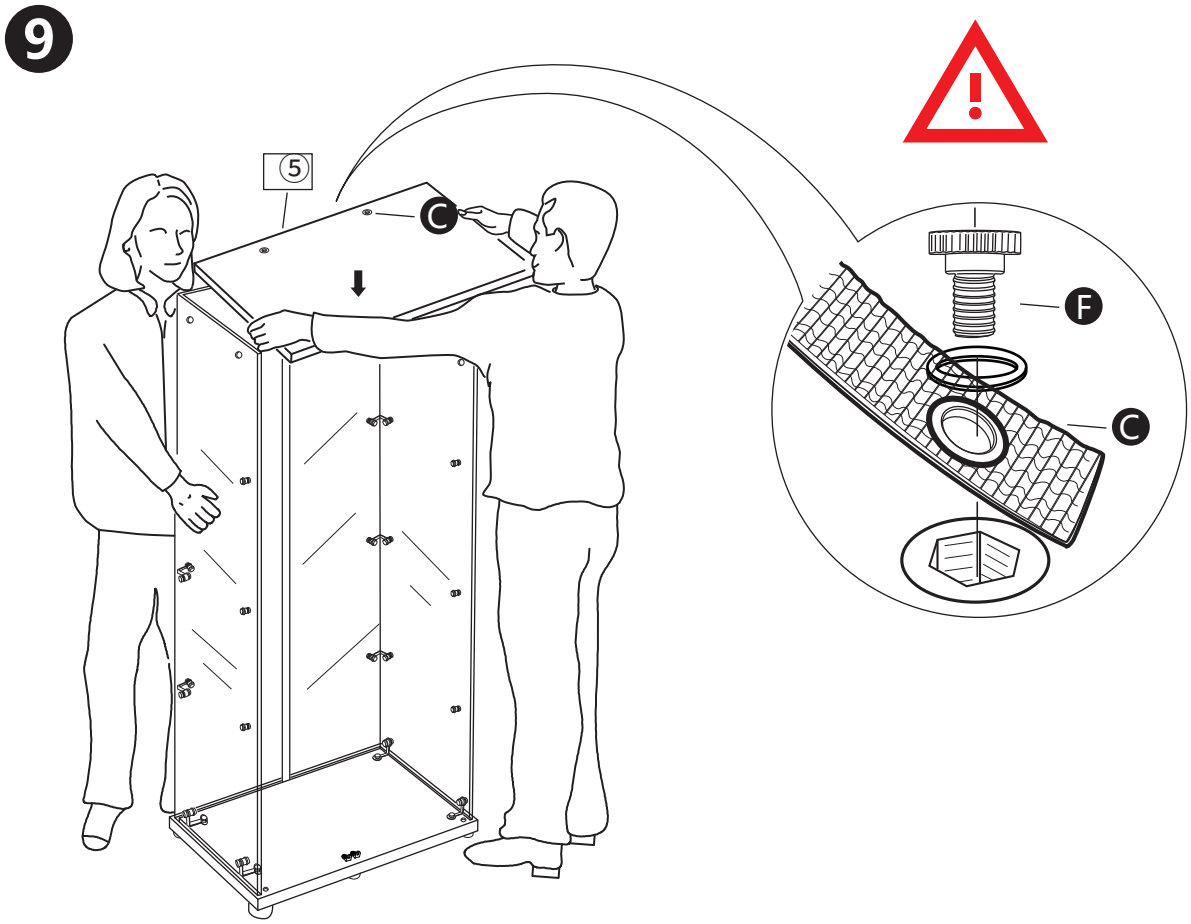

10

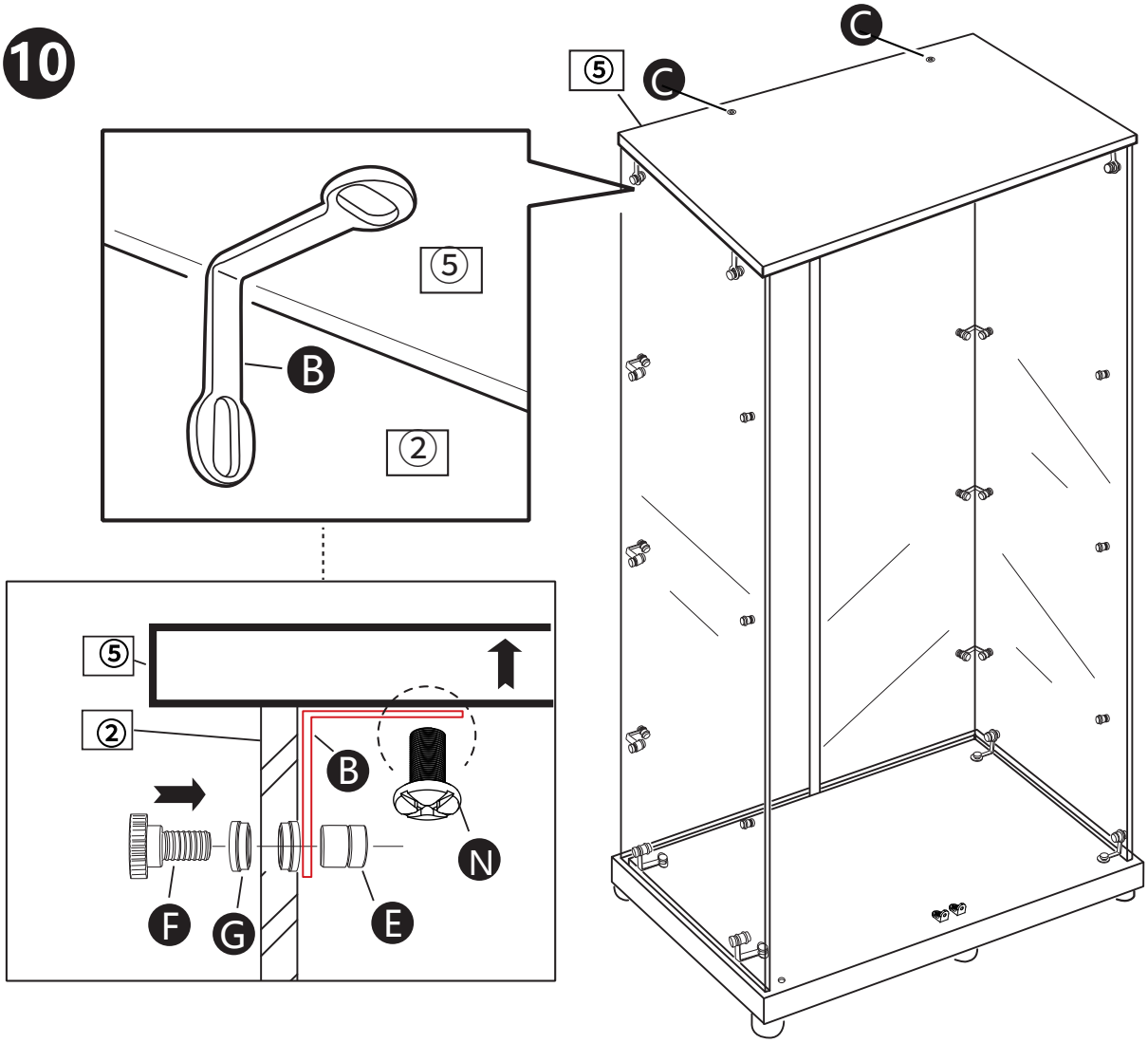

11

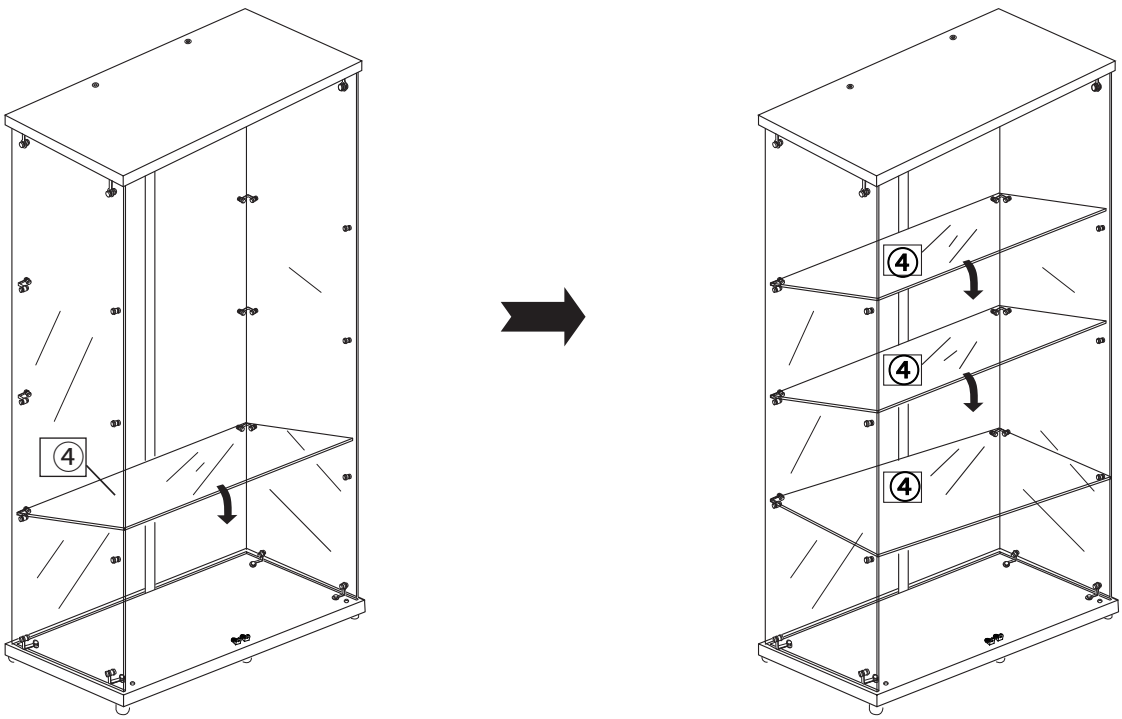

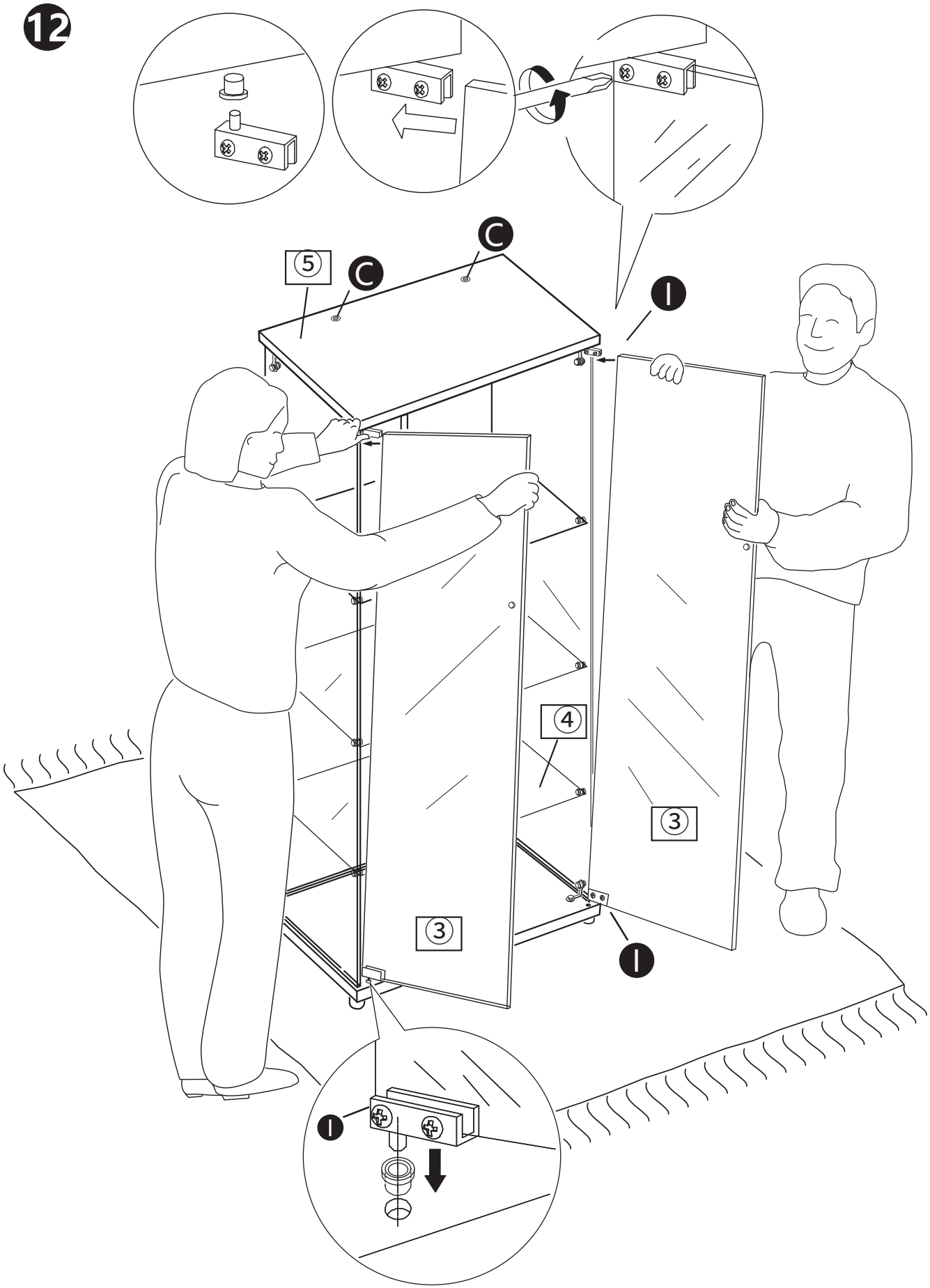
12
C
5
C
I
4
3
3
I
I

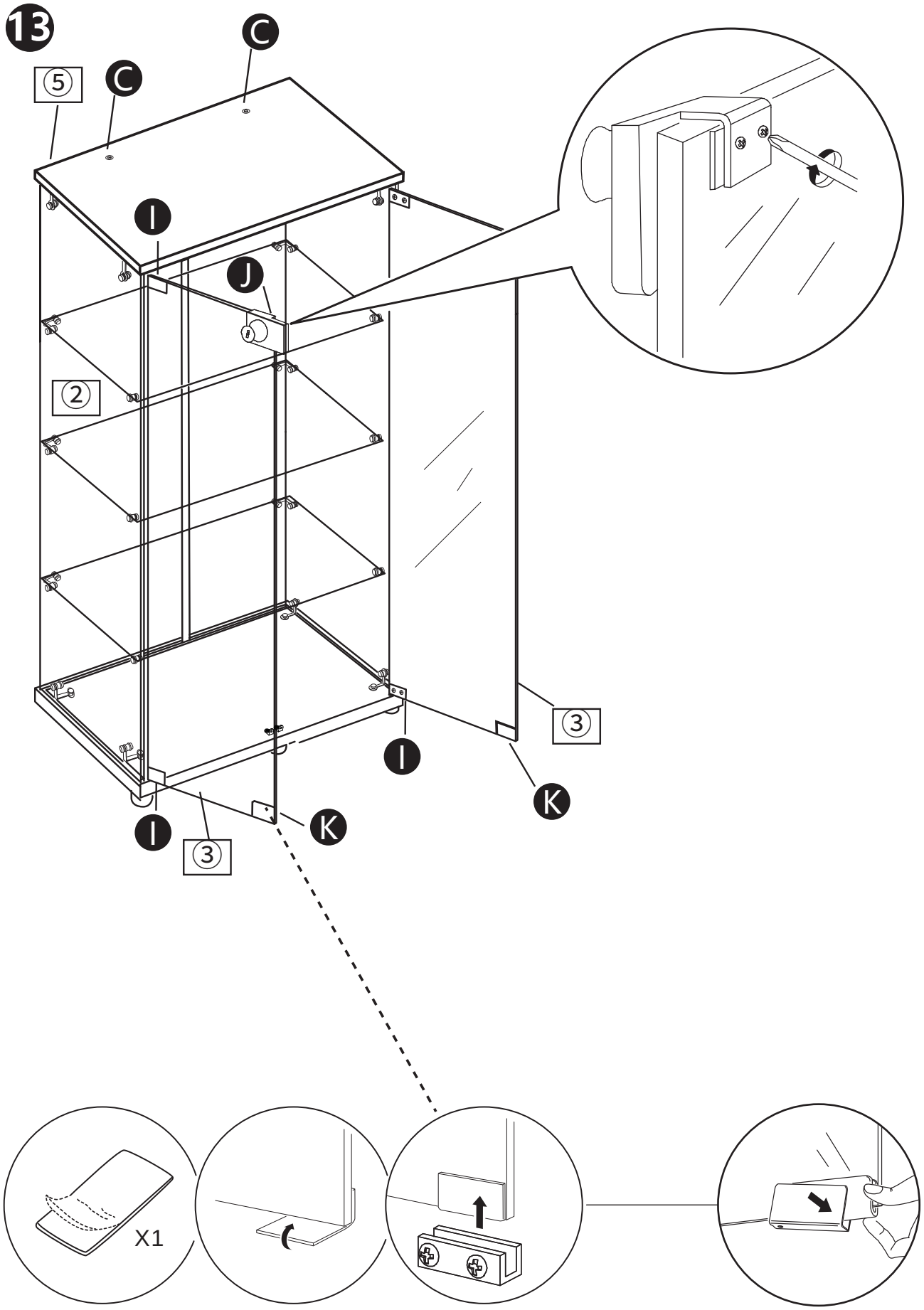
13
C
C
5
I
J
2
3
I
K
I
K
3
X1

14

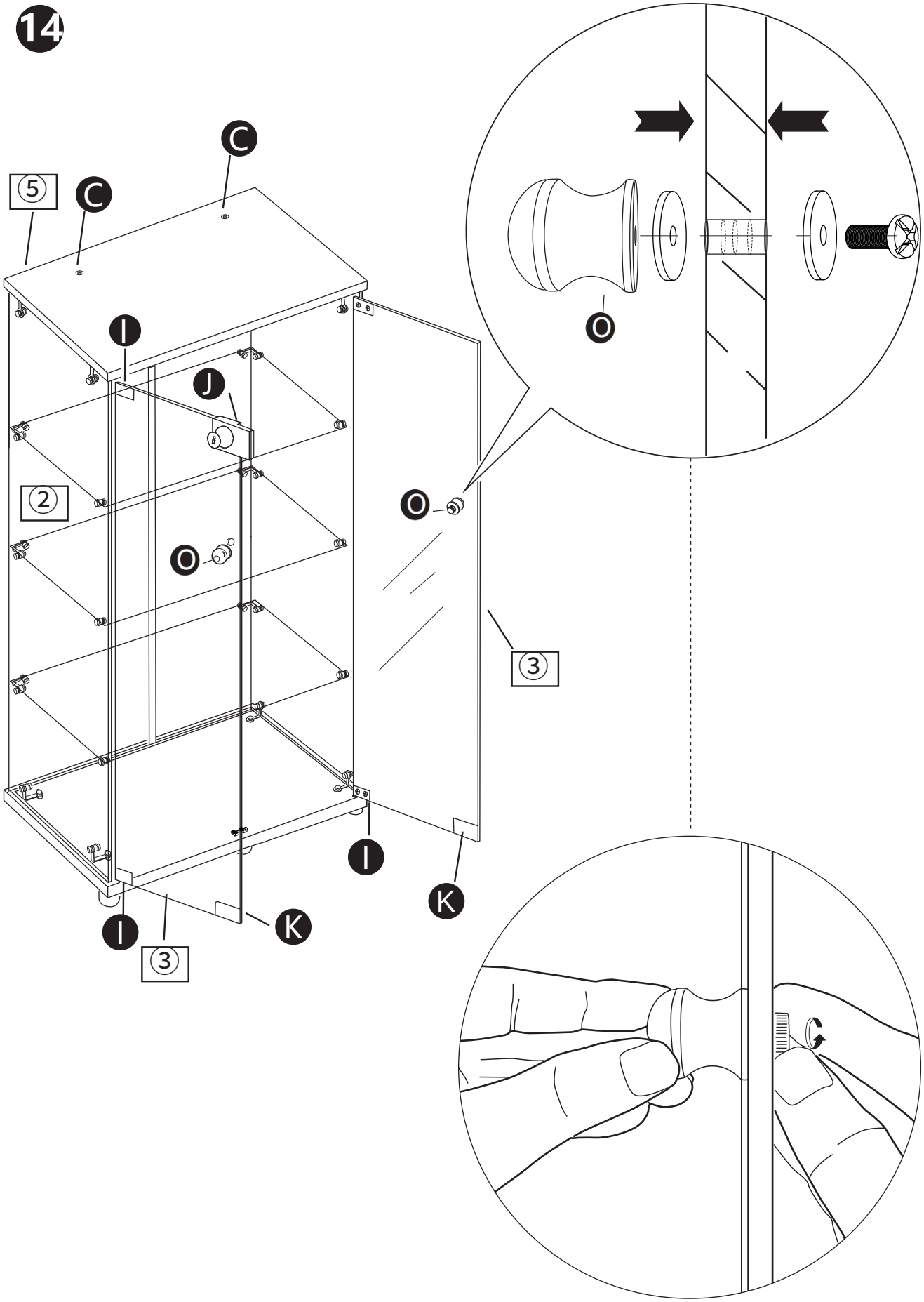

INSTALLATION TROUBLESHOOTING TIPS

Door clip adjustment

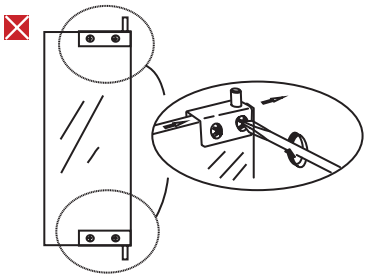

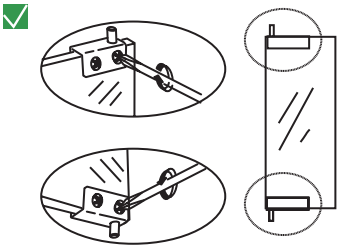

Handle indication

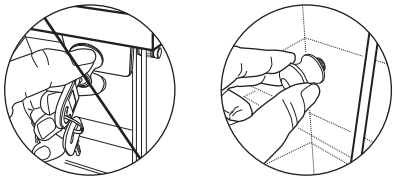

Door stopper installation is difficult

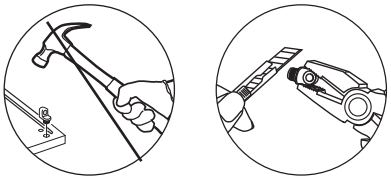

Please protect your hands
with tools to avoid scratches

Anti-tipping device

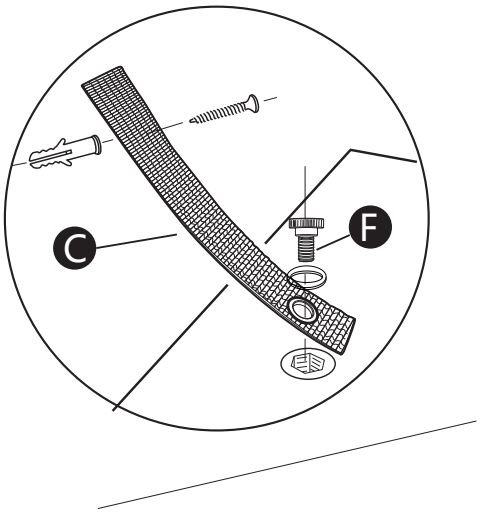

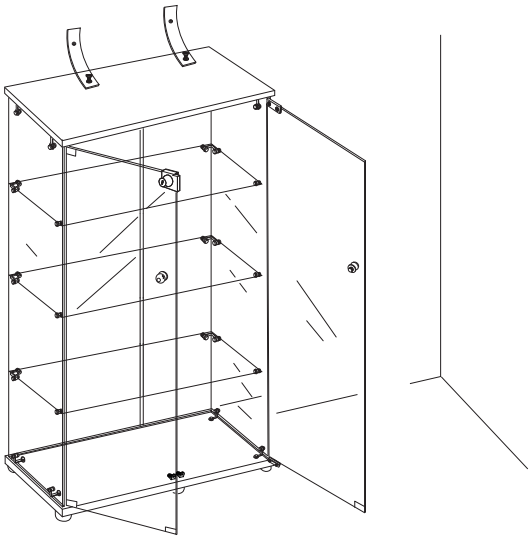

THANK YOU FOR PURCHASING OUR PRODUCT

Note: Please contact us if you encounter any problems with the install on,missing or replacement parts,and tell us your “ORDER ID,” we will solve the issue for you as soon as possible.

Please scan the QR code to refer to the installa on video.

online video:h ps://buylikepro.com/pages/glass-display-cabinet- support

Customer Service Email: help@EverythingSupport.com
TEL:(855)208-0668(MON-FRI 9:00am-6:00pm Eastern Time)