INSTRUCTION MANUAL

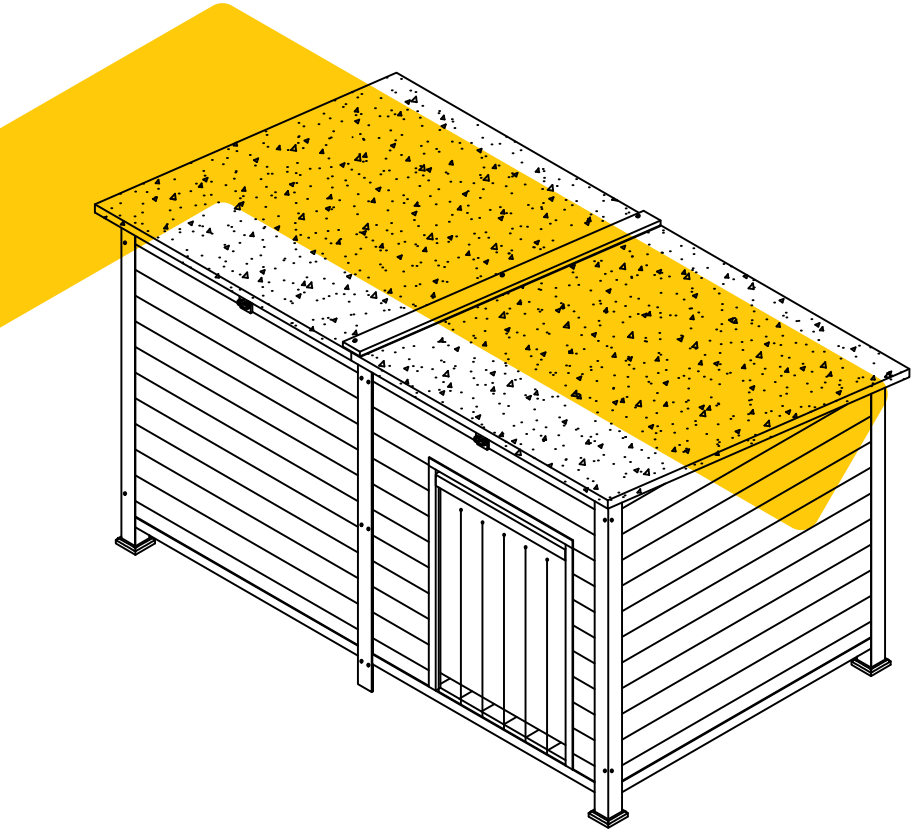

NOTICE

Please retain these instructions for future reference.

- Firmly secure all bolts,screws and knobs before use.
- Reconfirm that all bolts,screws,and knobs are secure every 90 days.
- Fasten screws loosely during initial assembly. Do not fully tighten screws until the item is completely assembled.
- Do not use or store this item in the proximity of open flame or flammable/combustible chemicals.
- Be aware that some parts are heavy and have sharp edges.
- Be aware that moving parts can injure,crush and cut.
- If any parts are missing,broken,damaged,or worn,stop using this product until repairs are made and/or factory replacement parts are installed.
- Do not use this item in a way inconsistent with the manufacturer's instructions as this could void the product warranty.

TOOLS REQUIRED



PHILLIPS
SCREWDRIVER

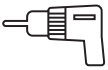

DRILL
(RECOMMENDED)



2PERSON
ASSEMBLY



APPROXIMATELY
30MIN. ASSEMBLY

HARDWARE

M6.0 x 20 mm bolt with washer
8 pcs



P1

M6.0 x 30 mm screw
12 pcs

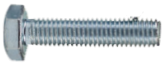

P2

M3.5 x 60 mm screw
4 pcs + 1 spare



P3

M3.0 x 25 mm screw
11 pcs + 1 spare



P4

M3.0 x 23 mm screw
3 pcs + 1 spare



P5

M3.0 x 18 mm screw
4 pcs + 1 spare



P6

M3.0 x 16 mm screw
20 pcs + 1 spare



P7

M3.0 x 14 mm screw
8 pcs + 1 spare



P8

HARDWARE

Lock
2 pcs



P9

Hinge
1 pc



P10

Hinge
1 pc

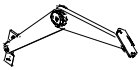

P11

PARTS

Front metal bar-left / right
2 pcs



A

Back metal bar-left / right
2 pcs



B

Plastic feet
4 pcs



C

Front panel-left
1 pc

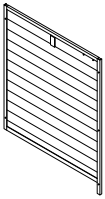

D

Front panel-right
1 pc

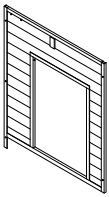

E

Back panel-left
1 pc

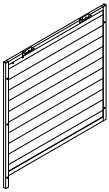

F

Back panel-right
1 pc

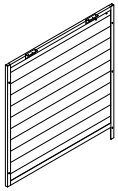

G

Side panel-left
1 pc

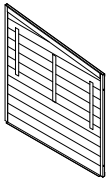

H

Side panel-right
1 pc

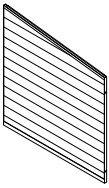

I

Bottom floor
2 pcs

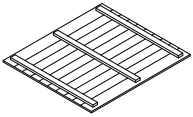

J

Bottom pad
2 pcs



K

Back connection strip
1 pc

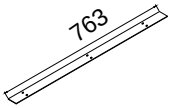

L

Front connection strip
1 pc

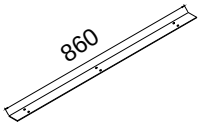

M

Roof connection strip
2 pcs

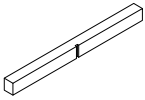

N

Bottom reinforcement strip
2 pcs

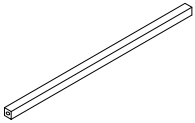

O

Roof-left
1 pc

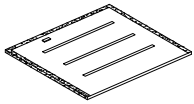

P

PARTS

Roof-left
1 pc

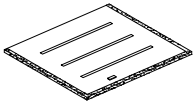

Q

Roof Strip
1 pc

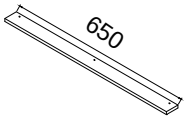

R

Roof Strip
1 pc

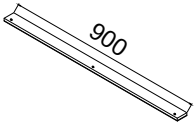

S

PVC curtain
1 pc

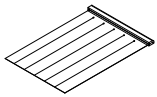

T

House insulated liner
1 pc



U

Roof insulated liner
2 pcs

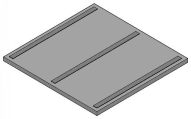

V

PRODUCT ASSEMBLY

01

Attach Part C (plastic feet) to metal bar A with the buckle.
Attach Part C (plastic feet) to metal bar B with the buckle.

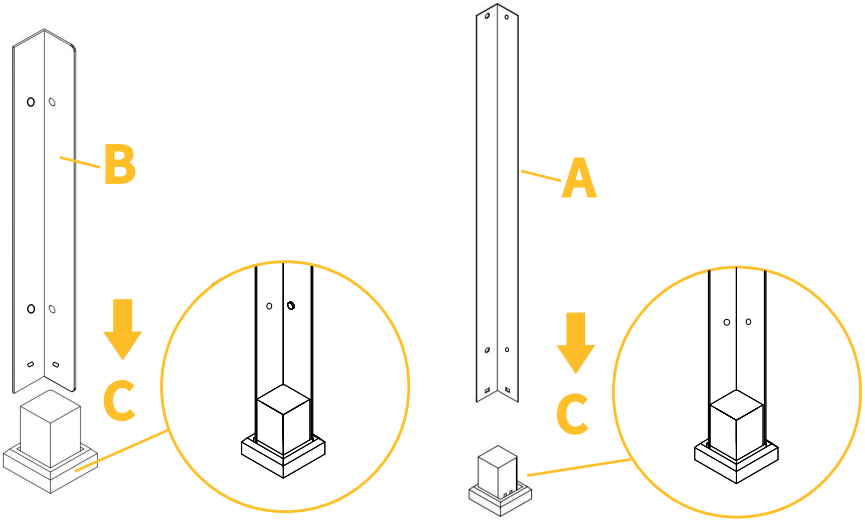

02

Attach Parts H & I (side panels) to Parts G & F (back panels), then fasten metal bar B with 4×P2 screws.

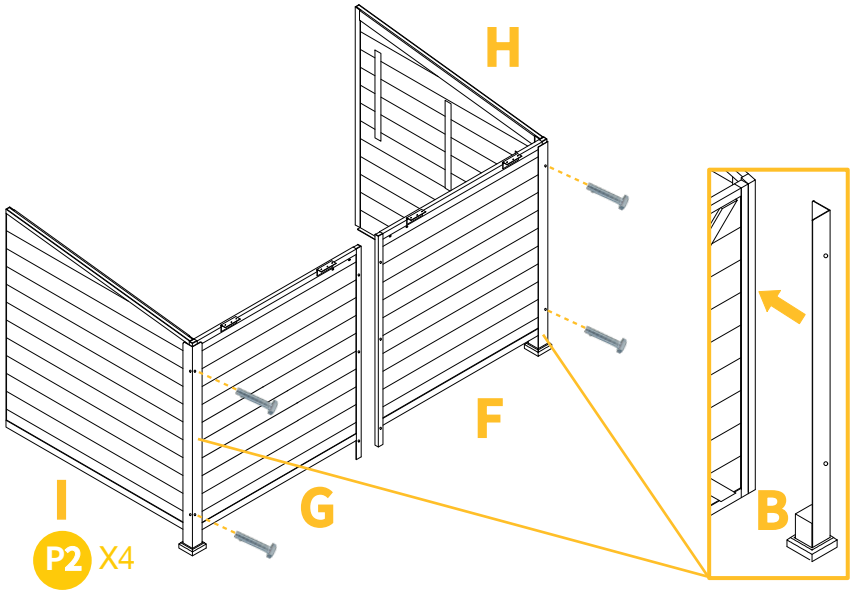

PRODUCT ASSEMBLY

03

Secure assemblies of Parts I & G and Parts H & F to Part L with washers and 4×P1 screws. Fasten Part F (back strip) with 2×P2 screws.

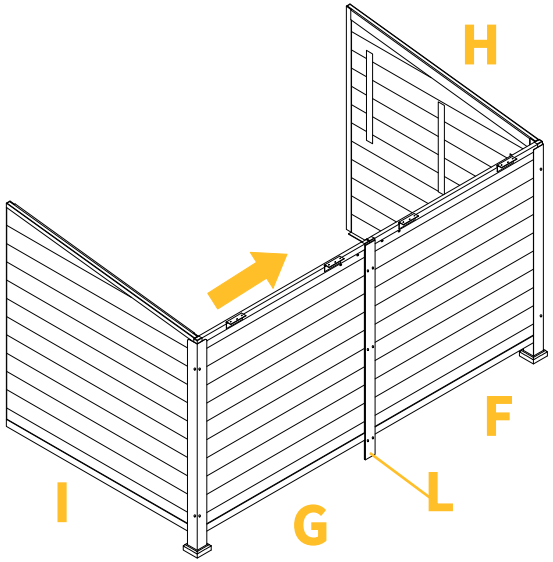

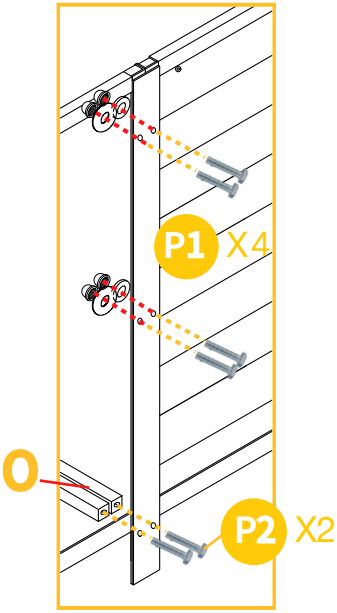

04

Fasten Part M (front connection strip) to the rear connecting strip with 2×P1. Mount Part H (side panel) to Part D (front panel), then fasten metal bar A with 3×P2 screws.

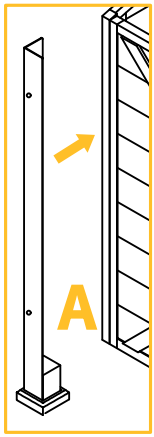

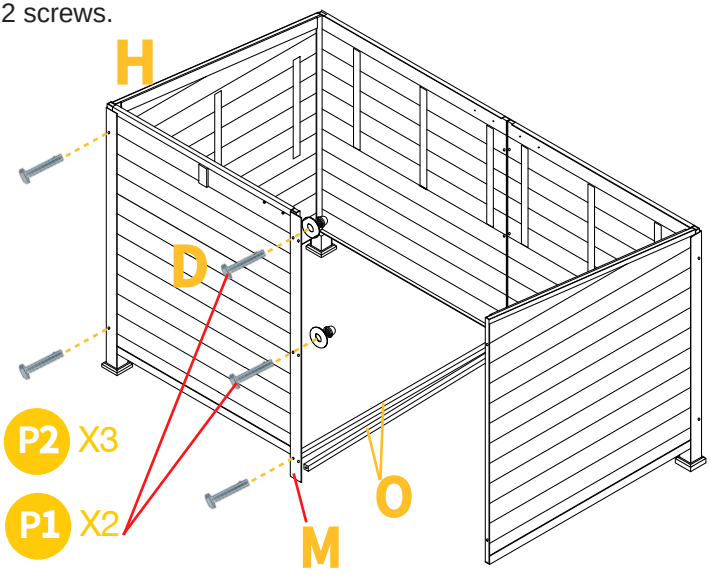

PRODUCT ASSEMBLY

05 Fasten Part M (front connection strip) to the rear connecting strip with 2×P1 screws. Attach Part I (side panel) to Part E (front panel), then fasten Part A (metal bar) with 3×P2 screws.

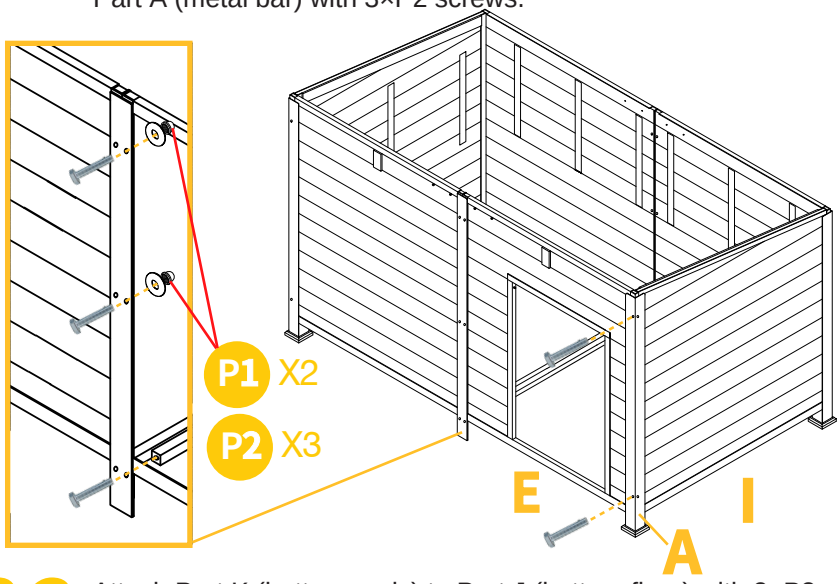

06 Attach Part K (bottom pads) to Part J (bottom floor) with 2×P3 screws each.

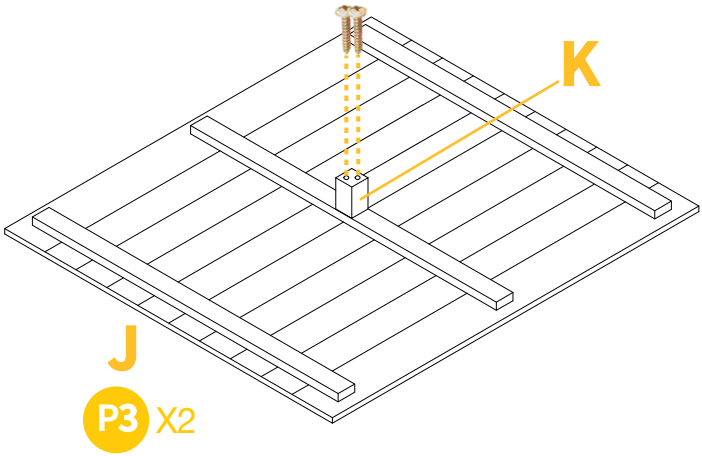

PRODUCT ASSEMBLY

07

Install bottom floor panel J.

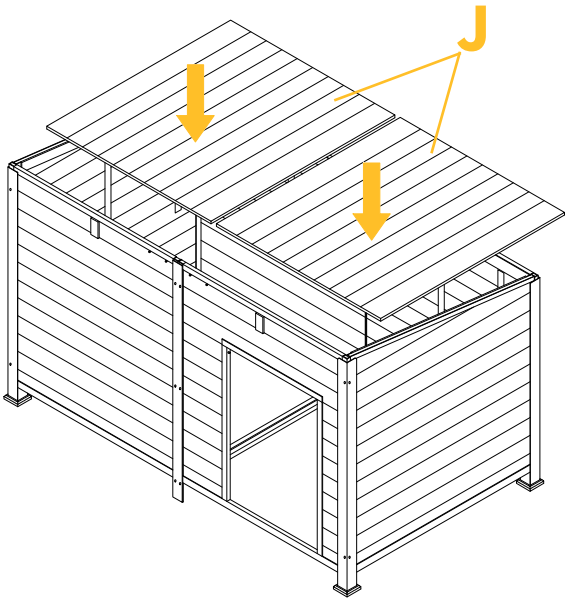

08

Secure Part N (Roof connection strip) to front and rear panels with 8×P4 screws each.

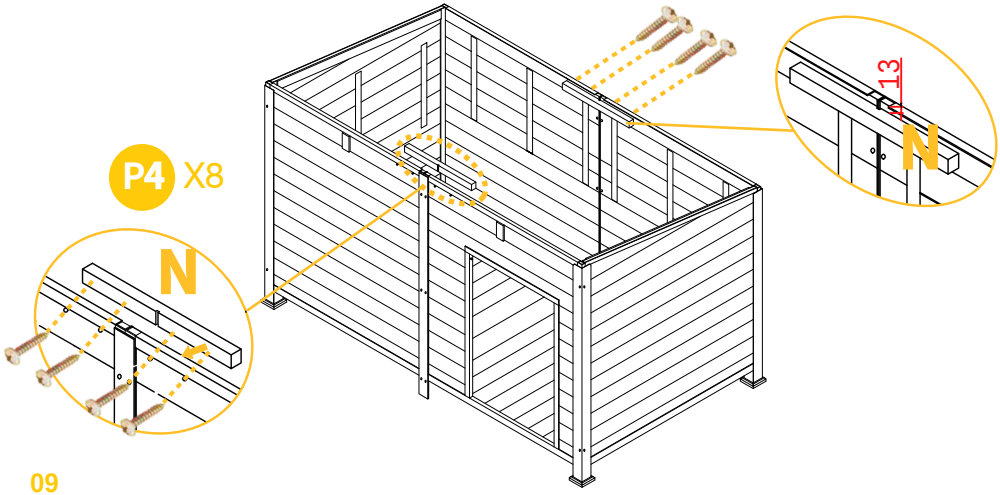

PRODUCT ASSEMBLY

09

Place Part U (insulated liner) inside the cabinet frame.

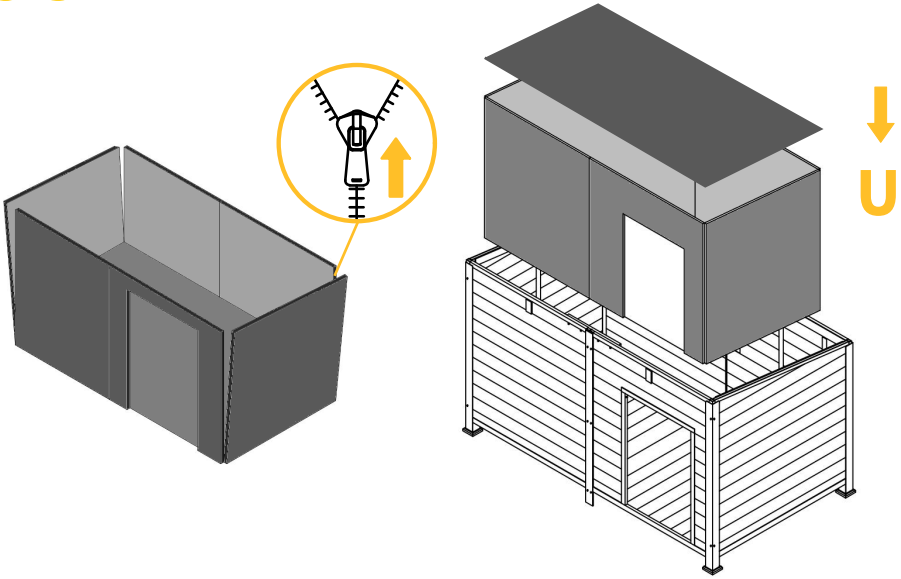

10

Attach Part P and Part Q (roof panels) with 12×P7 screws.

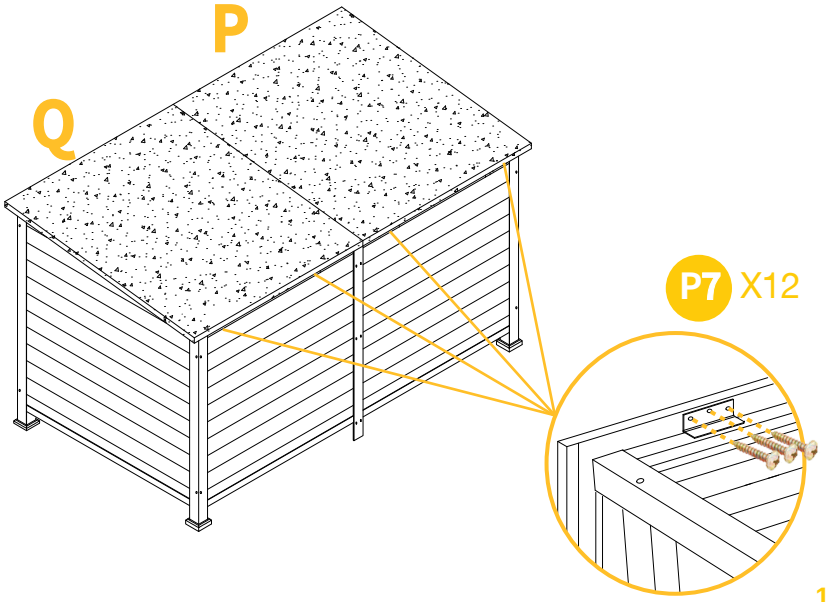

PRODUCT ASSEMBLY

11

Fasten P10 and P11 (roof hinges) with 2×P6 screws and 2×P7 screws.

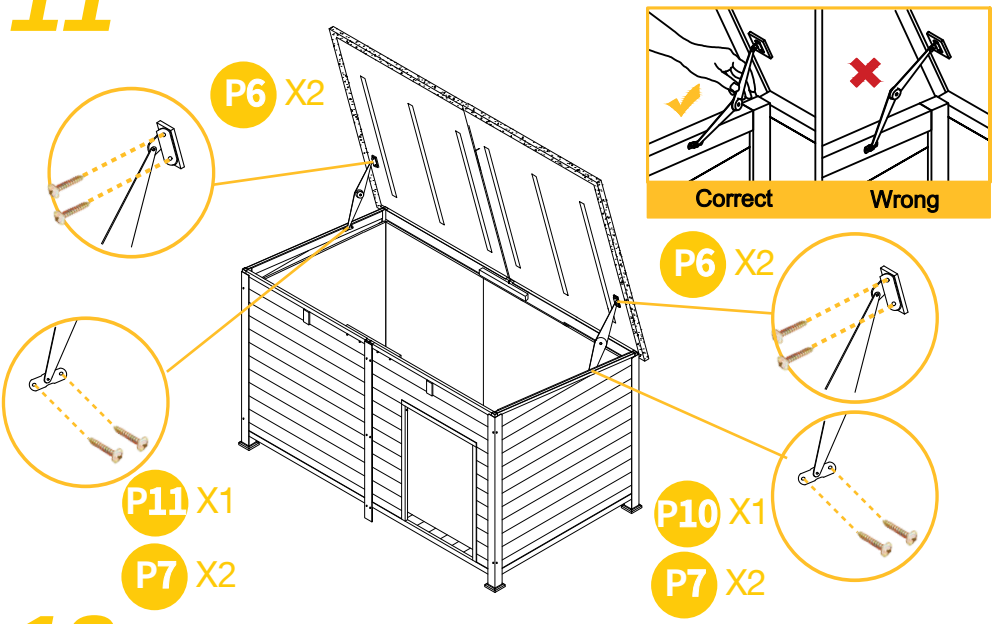

12

Fasten Part R (roof strip) with 3×P5 screws.

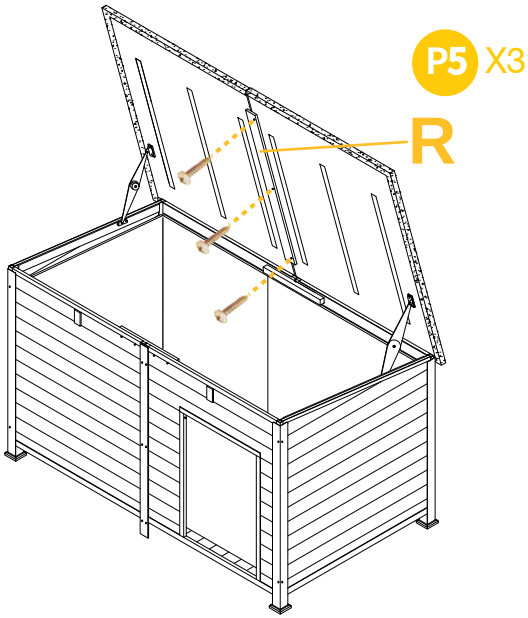

PRODUCT ASSEMBLY

13 Follow the 4 steps below to install lock P9.

① **Align pre-drilled holes on roof side frame, fasten each latch catch with 2×P7 screws.**

② **Close roof, mark lock strike plate mounting position on front panel.**

③ **Mount each Part P9 (matching lock) to marked front panel area with 4×P8 screws.**

④ **Test both side latches by closing the roof; readjust if misaligned.**

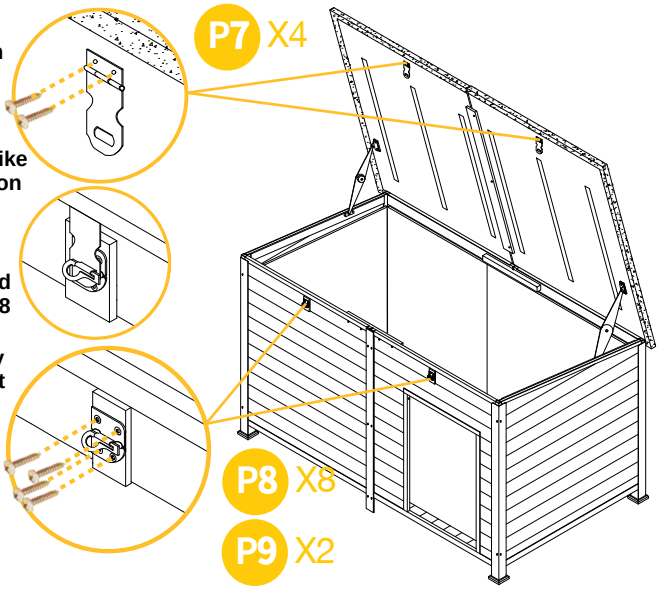

14 Affix Part V (insulated roof liners) to the interior of the roof panels.

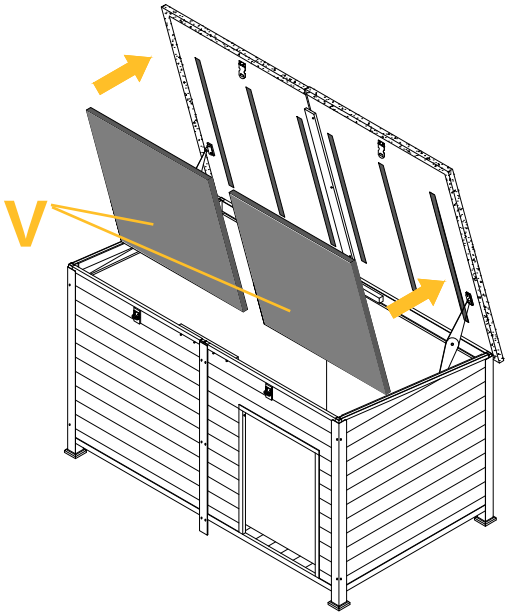

PRODUCT ASSEMBLY

15 Screw Part S (waterproof strip) to the exterior of the roof with 3×P4 screws.

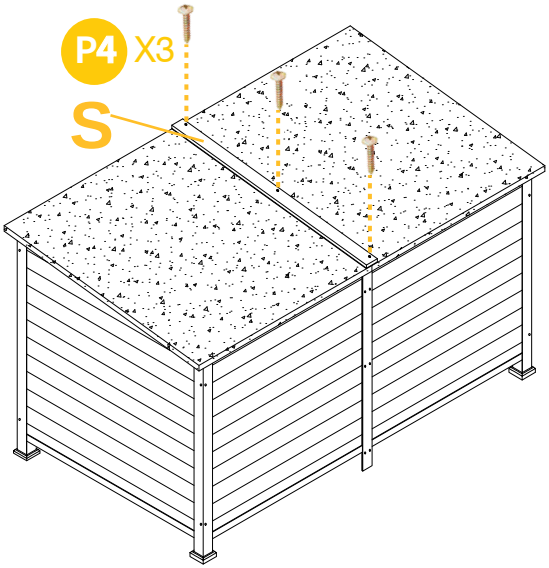

16 Screw Part T (PVC curtain) to the interior of Part E.

