Assembly Instructions

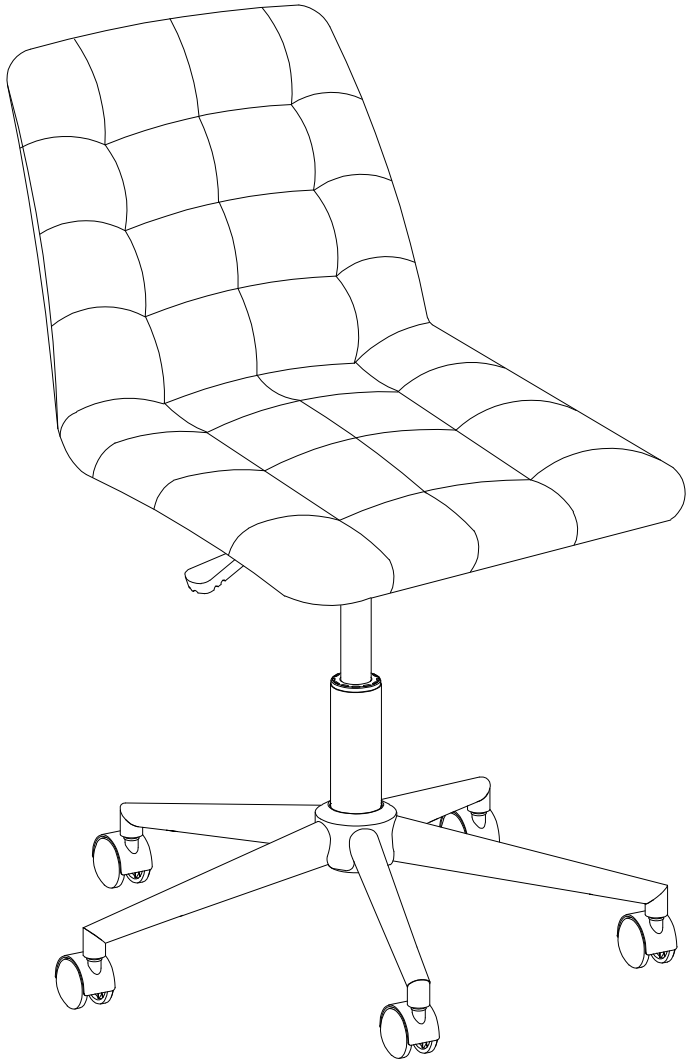

General Assembly Guidelines

I. Ensure that all parts and hardware are available before beginning assembly.

II. Follow each step carefully to ensure the proper assembly of this product.

III. Two people are recommended for ease in the assembly of this product.

IV. The main type of hardware used to assemble this product are: bolts and screws.

V. Power tools should not be used to assemble this product.

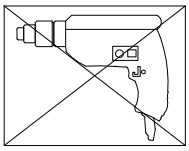

VI. Drill may be needed for securing product to wall.

Parts List

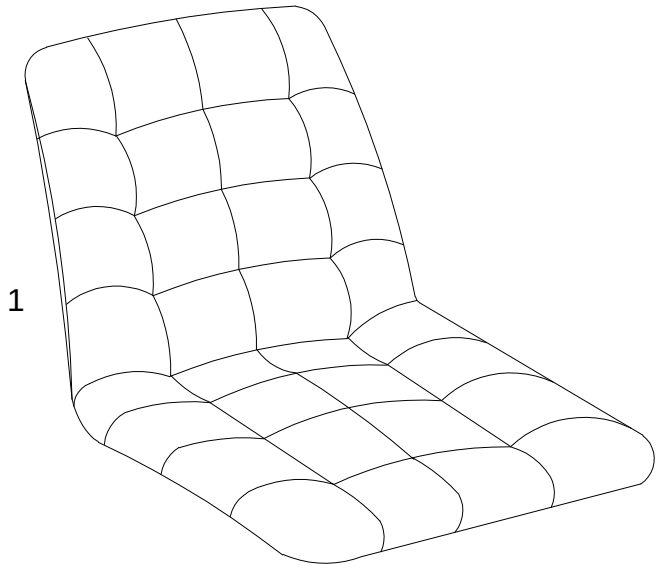

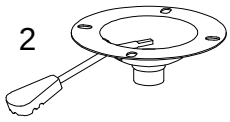

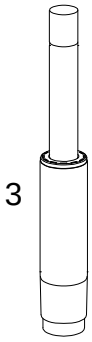

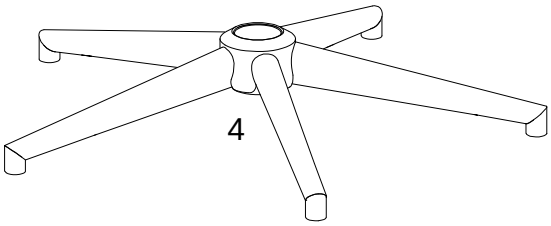











Hardware List

A			Flat washer	4	pcs
B			Lock washer	4	pcs
C		M6x18mm	Bolt	2	pcs
D	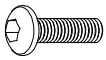	M6x25mm	Bolt	2	pcs
E	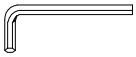	M 5	Hex Key	1	pc

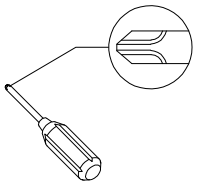

Philips head screwdriver required for assembly
(not included)

The hardware quantities listed above are required for proper assembly.
Some extra hardware may also have been included.

Step 1

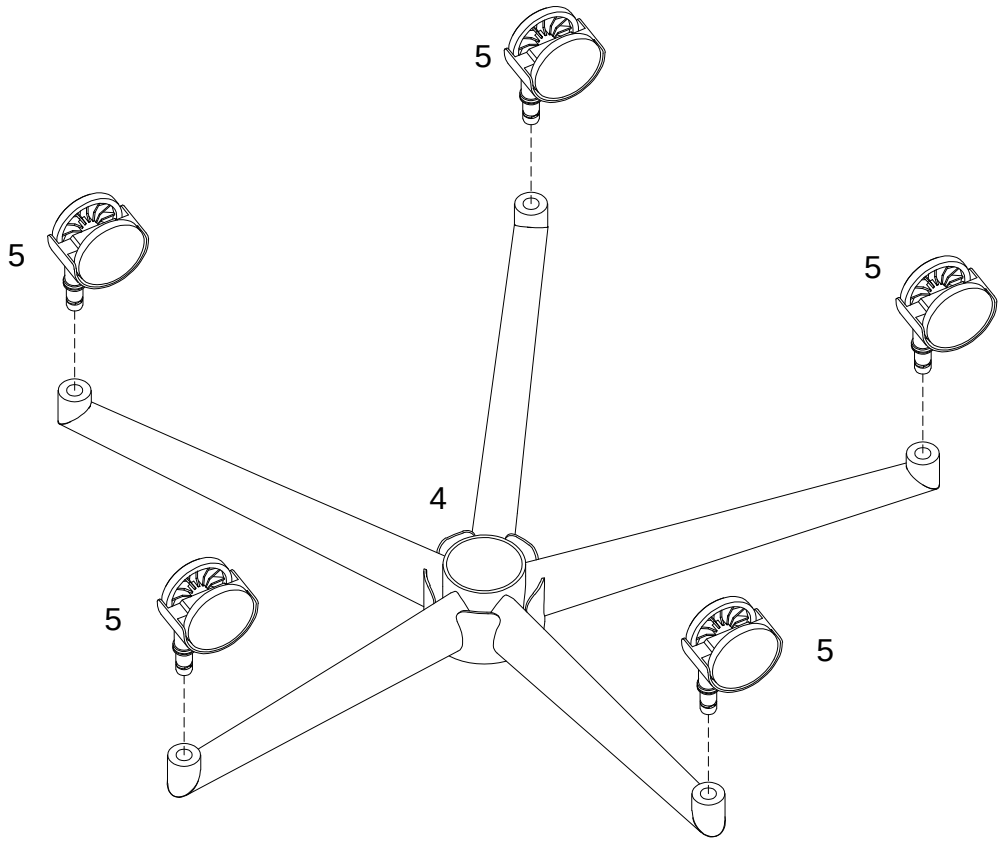

Place parts (5) to the bottom of part (4) as per diagram.

Step 2

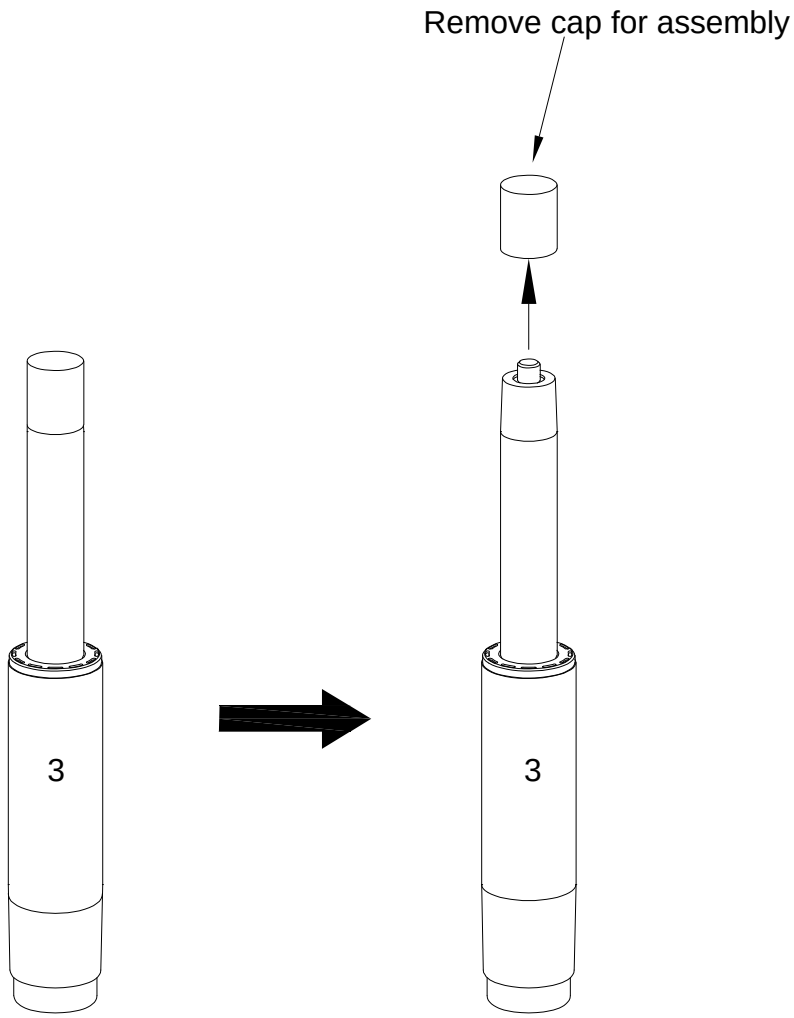

Remove cap at the top of part (3) as per diagram.

Step 3

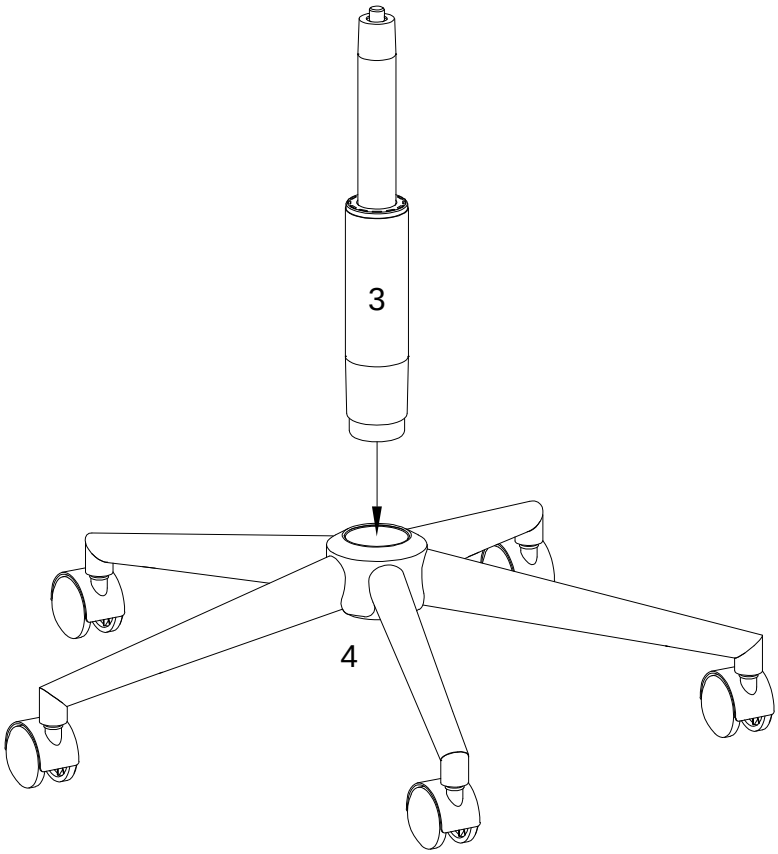

Insert part (3) into part (4) as per diagram.

Step 4

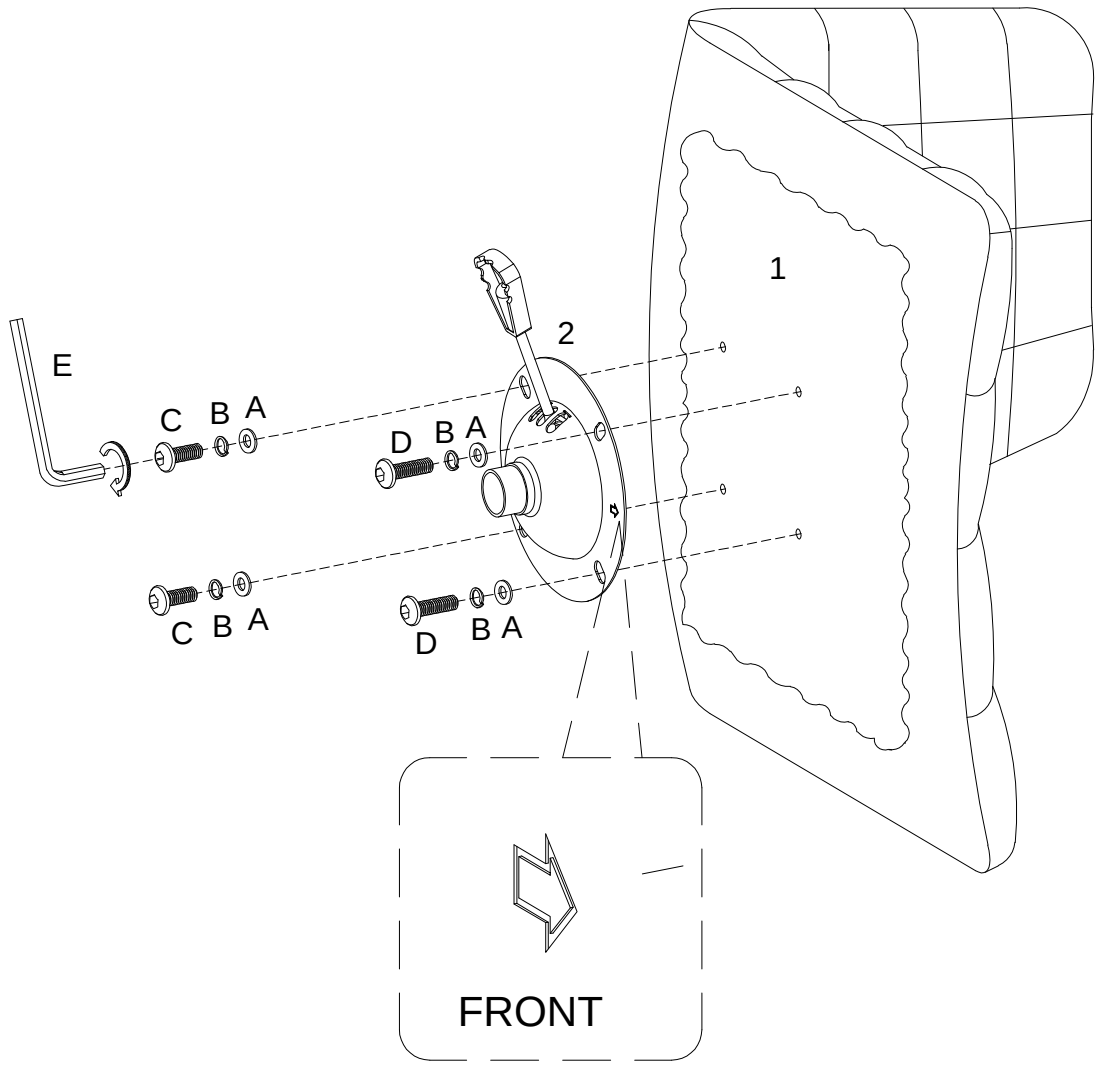

Using bolts (C,D) insert Lock washer (B) ,Flat Washer (A) into part (2) to part (1) with Hex Key (E) as per diagram.

Step 5

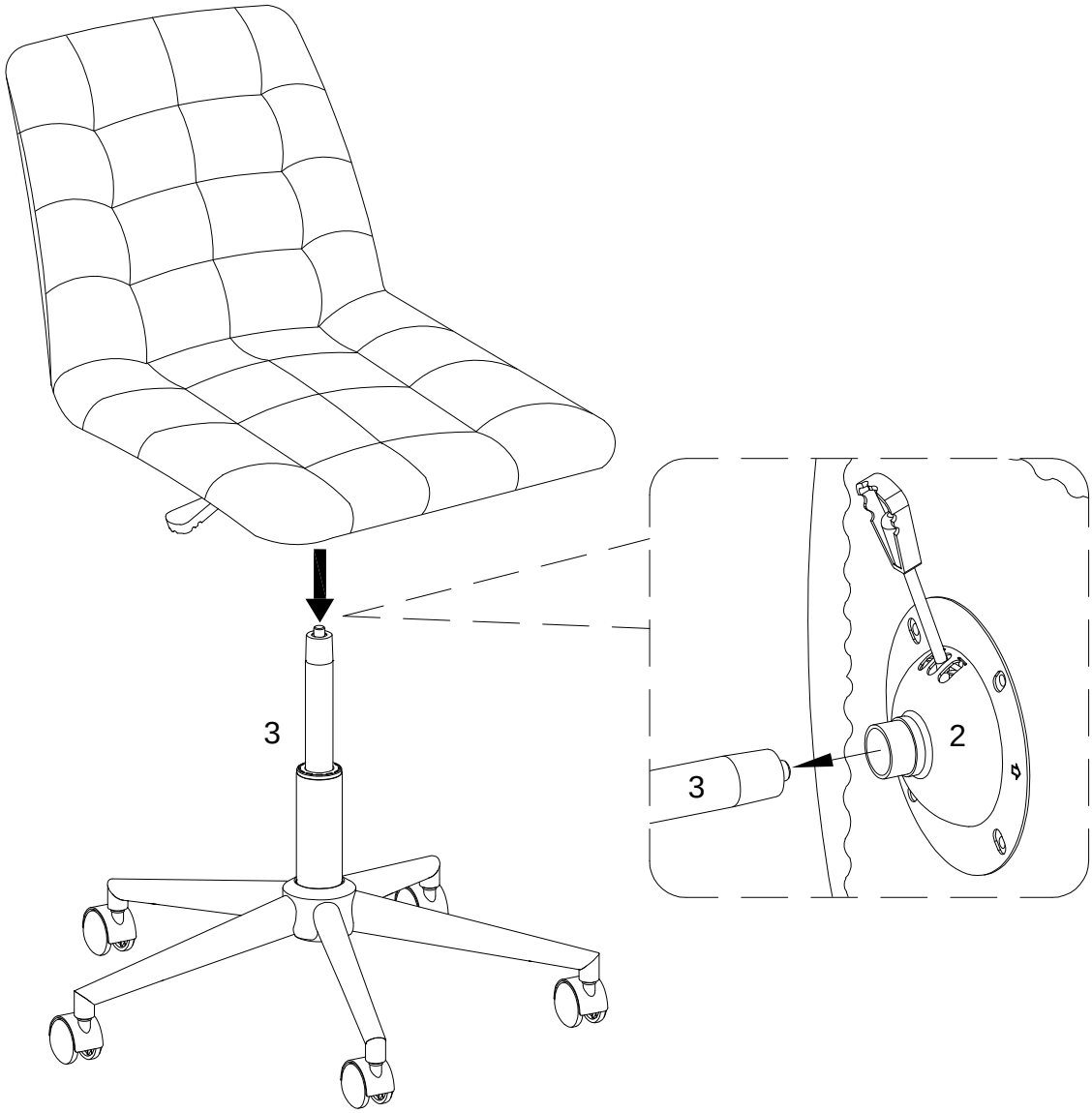

Put part (2) cover the top of part (3) as per diagram.

Step 6

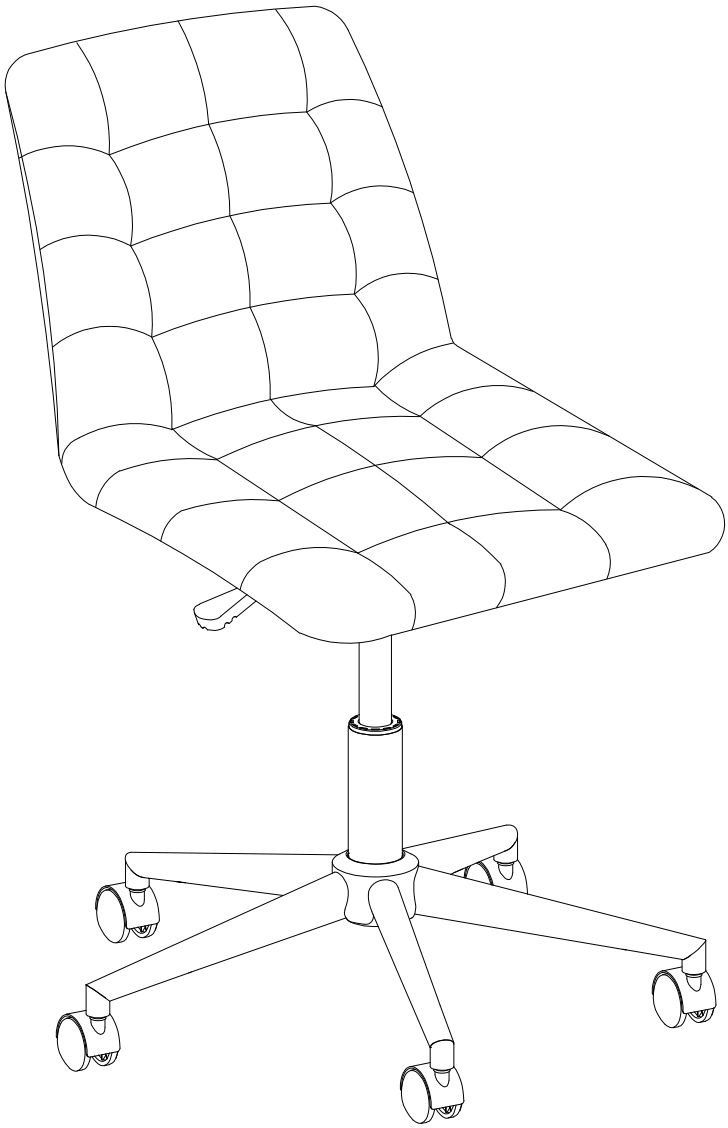

Final Assembly