Squat Machine

Instruction Manual

SI-SDJ22QM

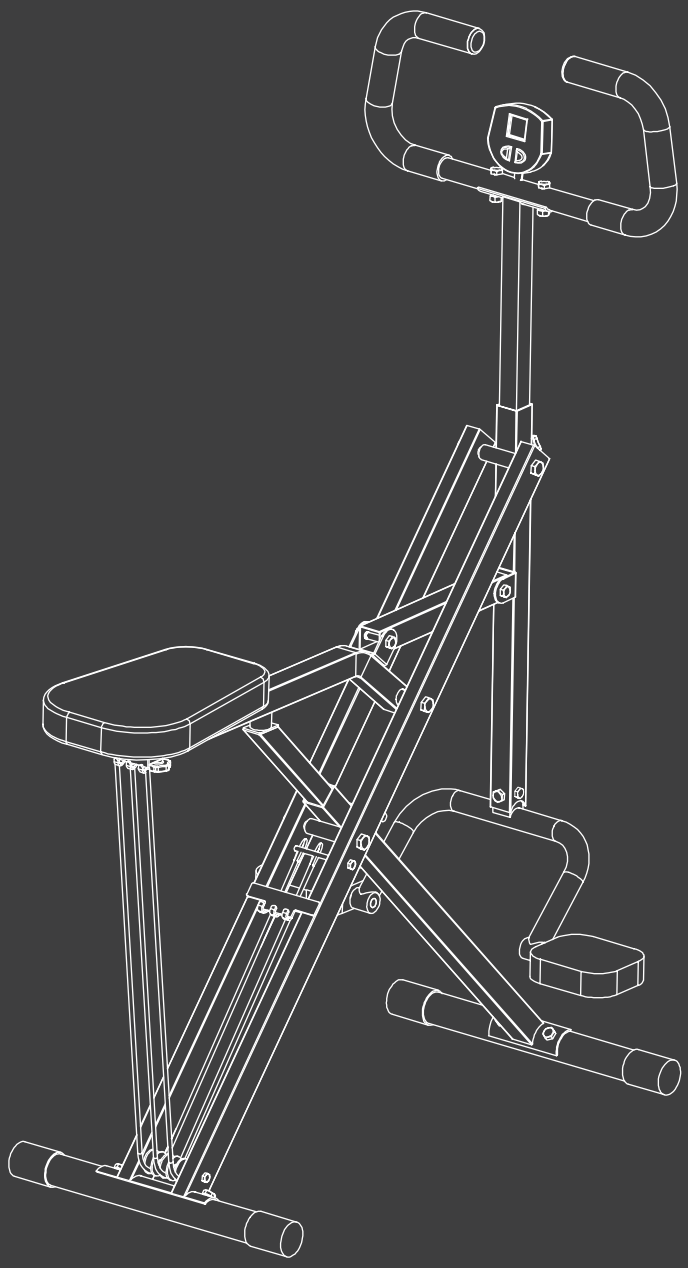

EST 9:00AM--17:00PM

HJ-Customer-Service@outlook.com

6269443420 | 6267435564

IMPORTANT SAFETY INFORMATION

Before using or installing the product, carefully follow the instructions and the following safety information, then retain this manual for future reference.

1. This product is designed for household use only. Always use the product as instructed.
2. Before starting any exercise program, consult a physician to determine if you have any physical or health conditions that may pose a risk to your health and safety, especially for people aged over 35, pregnant women, or those who have pre-existing health problems or balance disorders.
3. Before use, always warm up properly.
4. Pay attention to your body's signals. Wrong or excessive exercise can damage your health. Stop exercising immediately if you experience symptoms such as chest pain or tightness, irregular heartbeat, shortness of breath, light headache, dizziness, or nausea.
5. Keep components and hardware away from children and pets during and after use.
6. This product is designed for adults only. Keep children and pets away from it.
7. Place the product on a flat, stable surface with a dedicated protective or non-slip mat underneath. Keep the product away from sharp objects.
8. Maintain a clearance of at least 0.6 m on all sides, which must also include an area for emergency disembarkation.
9. Before each use, carefully inspect the product for damage or wear and tear. If you find a defective component, or hear an unusual sound when using, stop immediately and contact our after-sales service. Do not use the product until the problem has been solved.
10. Before using the product, check that the nuts, bolts, and other parts are securely tightened.
11. Don't put things in any crevices of the product.
12. Wear appropriate clothing when using the product. Do not wear loose clothing.
13. This product is not suitable for therapeutic use.
14. Be careful when lifting or moving the product to avoid injury.

Warning:

Please read all instructions carefully before using the product. We are not responsible for personal injury or property damage caused by improper use.

PARTS OVERVIEW

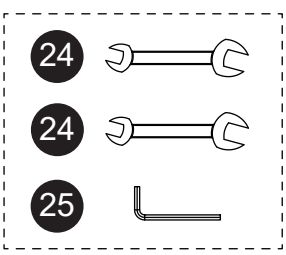

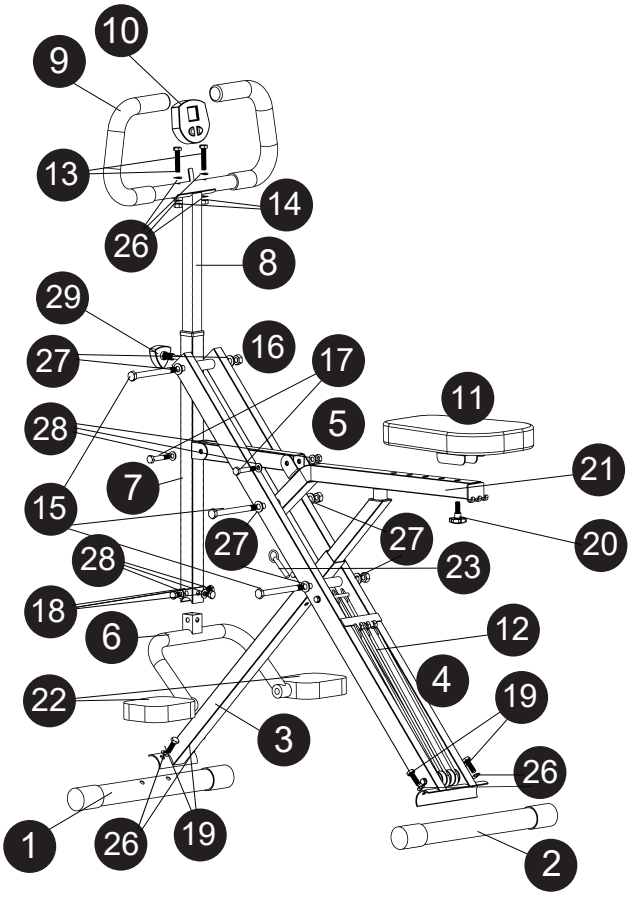

NO.	NAME	SIZE	QTY.		NO.	NAME	SIZE	QTY.
1	Front Stabilizer	/	1		16	Nuts	M10	3
2	Rear Stabilizer	/	1		17	Bolts	M8X45	2
3	Front Connecting Post	/	1		18	Screws	M8X10	3
4	Main Frame	/	1		19	Screws	M8X16	4
5	Connecting Post	/	1		20	Knob	/	1
6	Pedal Frame	/	1		21	Seat Post	/	1
7	Pedal Connecting Post	/	1		22	Pedals	/	2
8	Handlebar Post	/	1		23	Pin	/	1
9	Handlebar	/	1		24	Open Wrench	/	2
10	Console	/	1		25	Allen Key	/	1
11	Seat	/	1		26	Curved Washer	M8	8
12	Resistance Bands	/	3		27	Washer	M10	6
13	Bolts	M8X40	2		28	Washer	M8	7
14	Nuts	M8	4		29	Knob	/	1
15	Bolts	M10X110	3					

ASSEMBLY INSTRUCTION

Step 1

15 x3	16 x3	19 x4	23 x1	24 x2	25 x1	26 x4	27 x6

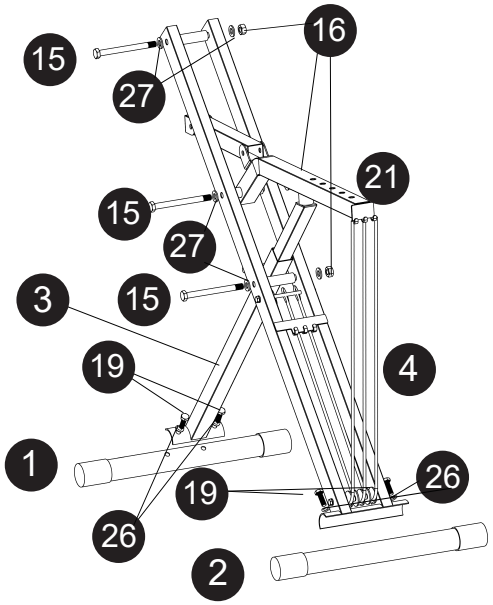

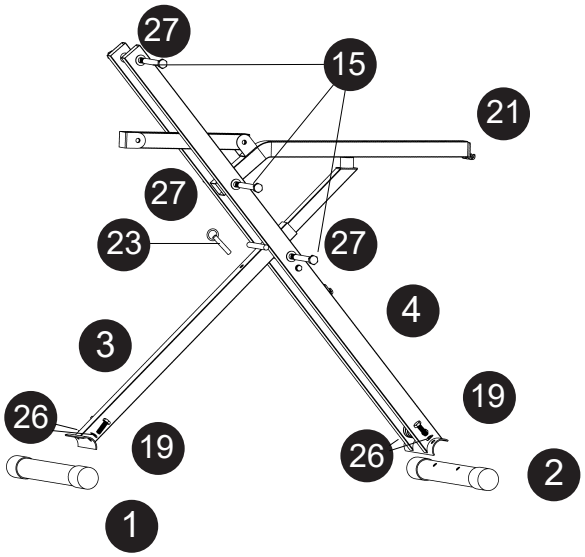

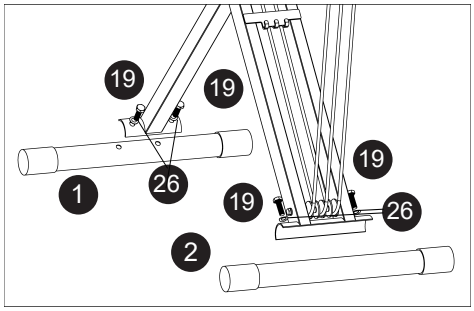

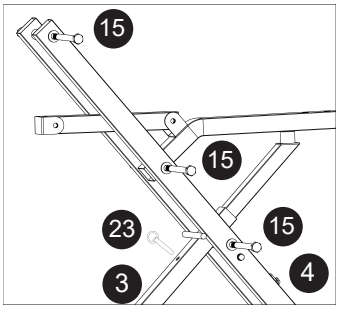

Note:

1. When installing three No. 15 screws, they need to be tightened simultaneously.

Step 2

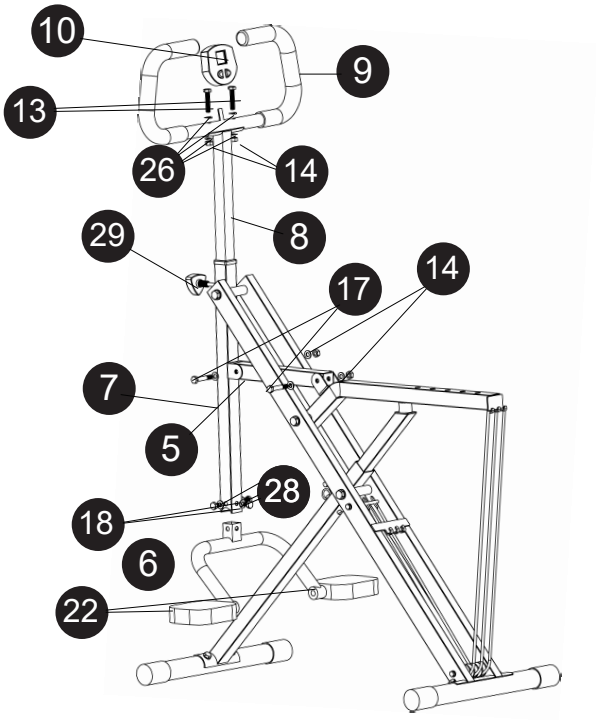

13 x2	14 x4	17 x2	18 x3	29 x1	24 x2	25 x1	26 x4	28 x7

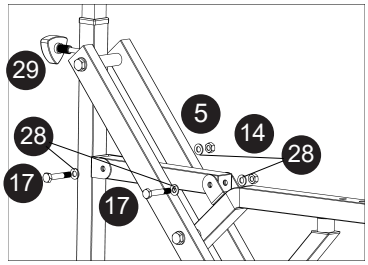

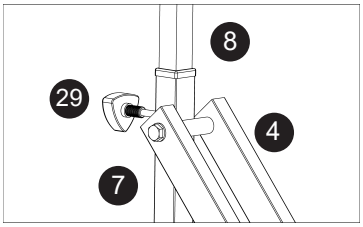

Step 3

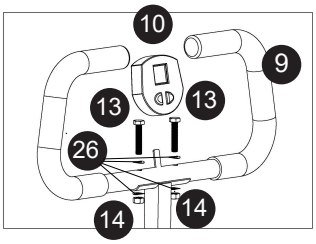

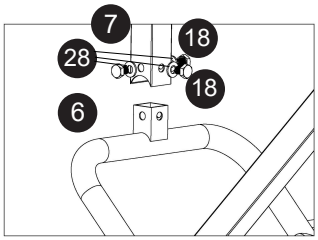

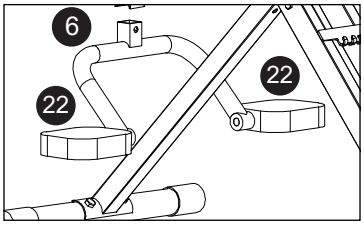

20 x1

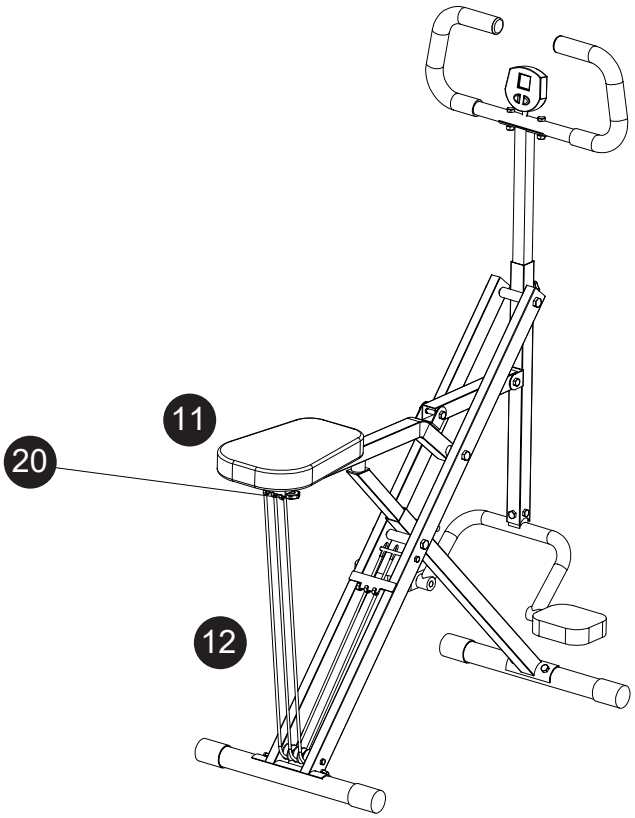

CONSOLE INSTRUCTION



How to Install: Load one AA battery (not included) in the battery box on the back. Insert the console into the metal plate on the handle as shown.

Button Functions:

MODE: Press to select the specific function you want. Changing the battery or pressing the MODE button for 3 ~ 4 seconds will reset all values.

RESET: Press to reset all values.

Functions:

1. COUNT: Automatically accumulates the number of strokes during exercise, ranging from 0 to 9999.
2. TIME: Displays the exercise time, ranging from 0:00 to 99:59 min.
3. CAL: Displays the amount of calories burned when exercising, ranging from 0 to 9999 kcal.
4. NUMBERS/MIN: Display the average number of movements per minute, ranging from 40 to 220 bpm.
5. SCAN: Automatically scan through each function between COUNT, TIME, CAL, and NUMBERS/MIN every 4 seconds.

Note:

1. Without operation for 4-5 minutes, the display will turn off automatically.
2. Once you operate the product, the display automatically turns on.
3. If the display is abnormal, reinstall or replace the battery.

MAINTENANCE

1. Wipe away the sweat, dust, or other residue with a soft, clean cloth after each use.
2. Always ensure that the resistance band is secure and shows no signs of tearing.
3. Regularly check the tightness of nuts and bolts.

WARRANTY INFORMATION

1. This product is covered by a **one (1) -year** limited warranty against defects in materials and workmanship, valid only for the original purchaser. The warranty period begins on the date of retail purchase and is non-transferable.
2. This warranty does not cover normal wear and tear, or any damage resulting from misuse, negligent use, use with improper voltage or current, failure to follow the operating instructions, or any disassembly, repair, or modification not authorized by our after-sales service.
3. Additionally, this warranty does not cover damages caused by Acts of God (such as fire, flood, hurricanes, or tornadoes) or force majeure events (such as arson, power outages, riots, or vandalism).
4. This warranty gives you specific legal rights, and you may also have other rights which vary from state to state (or province to province). Some states (or provinces) do not allow limitations on how long an implied warranty lasts, or the exclusion or limitation of incidental or consequential damages, so the above limitations or exclusions may not apply to you.

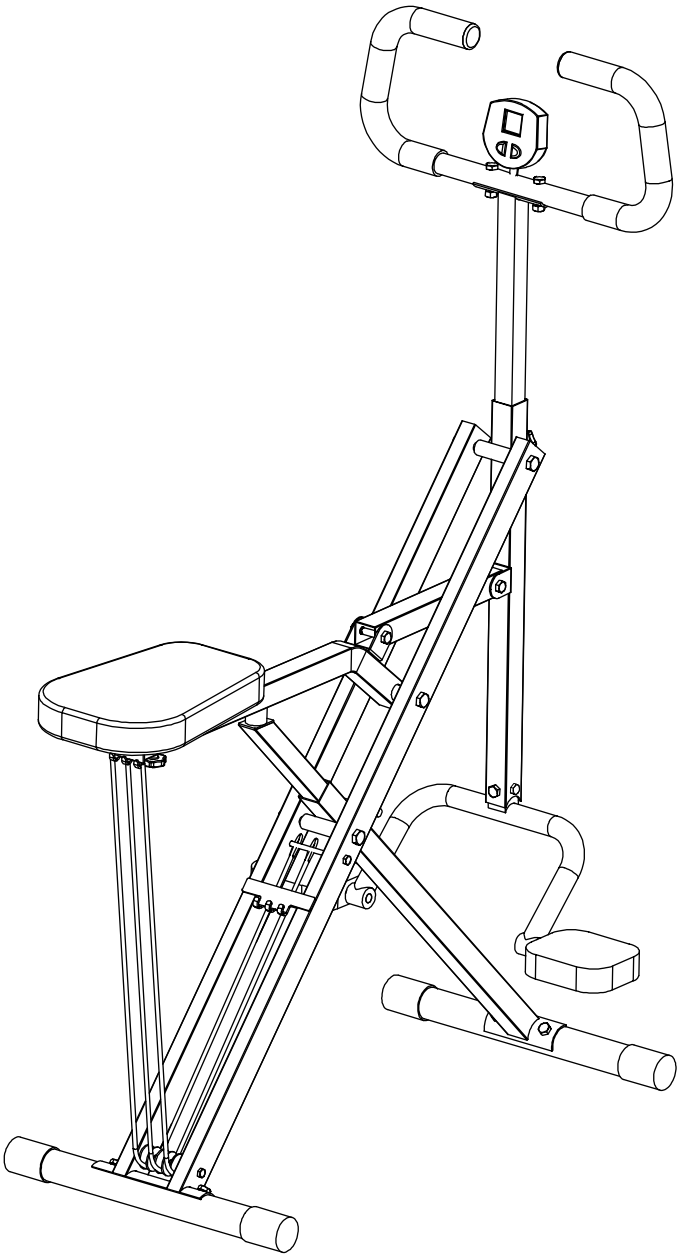

Technical Support

6269443420 | 6267435564

Other Info

HJ-Customer-Service@outlook.com

Thank you for choosing this product. We strive to provide you with the best quality products and service in the industry. Should you have any issues, please don't hesitate to contact us.