Adaptive Design, Effortless Living.

HULALA®

HOME

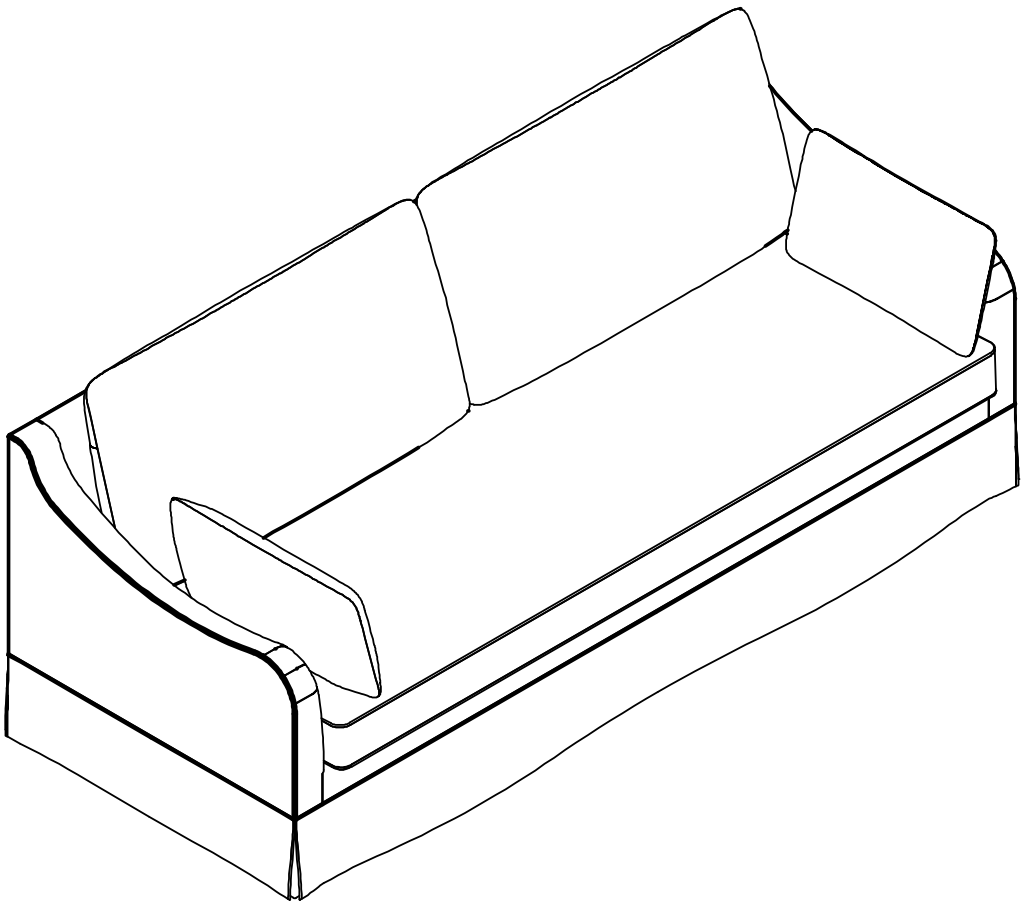

ITEM NO. SFAY2080

Scan for manual,
video & advice.

Adaptive Design, Effortless Living.

HULALA® HOME

If you have any questions or concerns,
don't hesitate to reach out to us.

Call us: +1(833)324-2464 (8 AM to 5 PM PST Monday-Friday)
Email: customerservice@hulalahome.com

MAINTENANCE AND WARNINGS

Thank You For Choosing Our Furniture.
Please read the instructions and warnings carefully before use, to ensure safe and satisfactory operation of this product.

NOTE :
This brochure contains IMPORTANT safety info. Please read and keep it for future reference.



Weight Limitation
1050 LBS

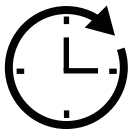

Installation:
30 minutes.

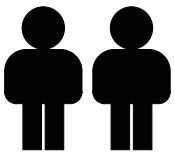

Two Person



Before You Start

Please follow the steps below:

- Unbox the package and check if all parts and accessories are complete.
- If you find something missing, stop assembly and contact your supplier immediately.
- Please do not completely tighten all the hardware until the entire assembly is completed! Be sure to tighten all the hardware once the assembly completed.
- NOTE:Should be assembled on soft surface to keep balance.

After-Sales Service

- If you encounter any issues or need technical support during use, please contact our after-sales team. We offer long-term maintenance and warranty services.

Warranty

We strive to offer high , quality products, and we also try our best to satisfy each and every customer that orders from us with product or service as needed. Each customer must provide a record of their order such as the order number, or item receipt for any items that are out of the warranty period you may also still receive replacement parts by purchasing them with our company if they are available.

Are you having dificulty with assembly? Missing parts? Please send email with your order number to **customerservice@hulalahome.com**

For return, please check the return policy with the retailer or market place you bought from. Appreciate your purchasing from us. Pop up your life by our furniture piece!

Daily Maintenance

- Keep furniture away from heat.
- Do not use cleaning agents containing acids, alkalis,or corrosive substances, as they may damage the surface. It is recommended to use neutral cleaning agents or specialized furniture cleaners.
- Do not place furniture under direct sunlight, material will possibly fade over time.
- Do not use on site dry cleaning machine.
- Children should not climb or jump on the furniture.
- Do not write on furniture without a padded barrier to protect the surface.
- Not for commercial use, for residential use only.

Exploded Diagram

Please confirm that you have received all 2 boxs(box A/B),
then begin the assembly!

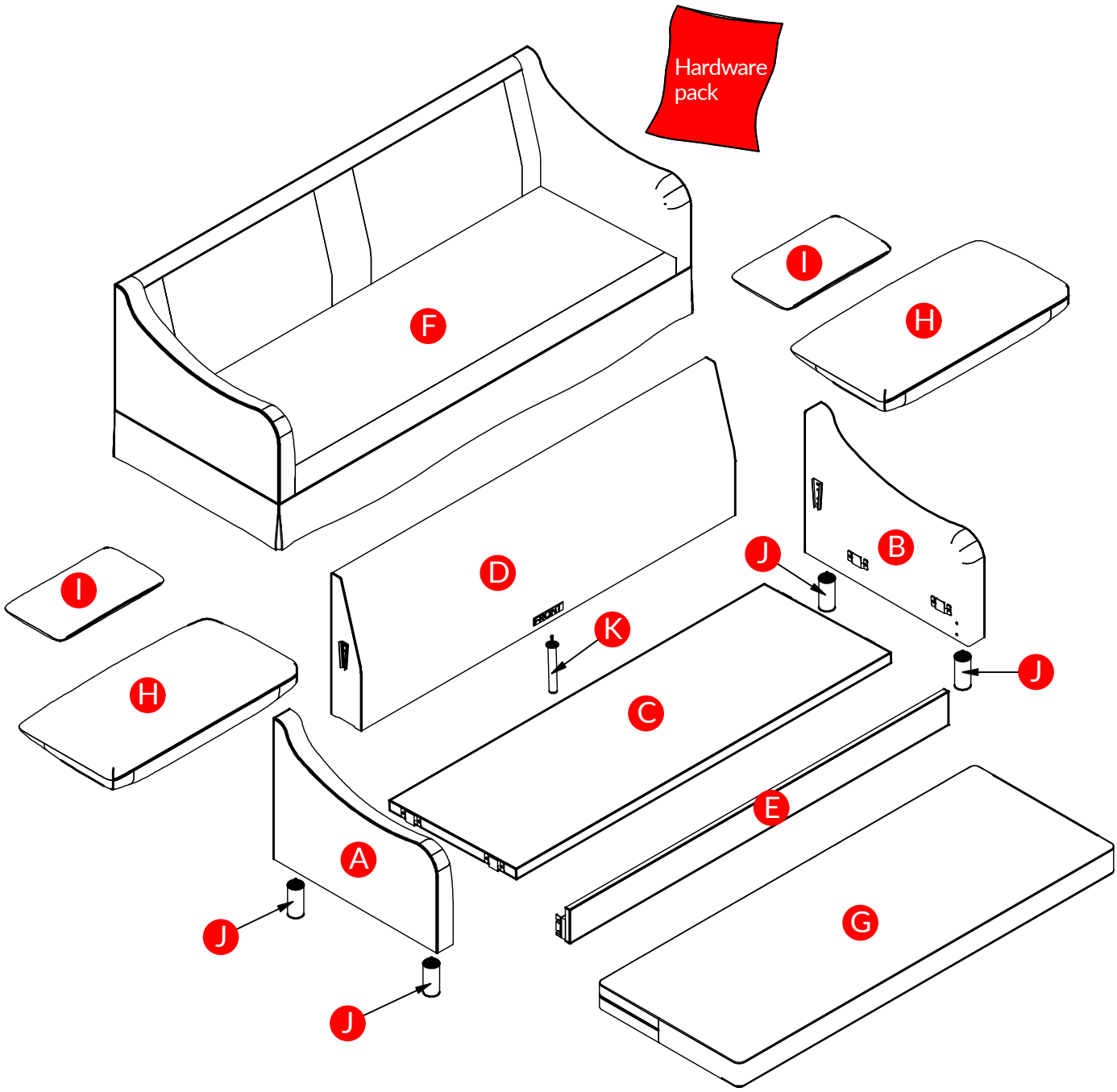

Parts List (Carton A)

A x 1

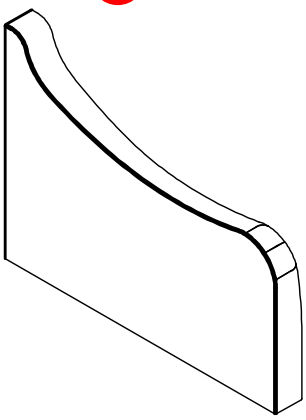

Left Arm

B x 1

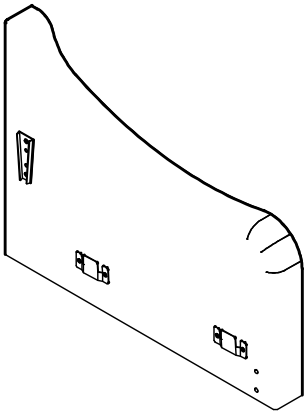

Right Arm

C x 1

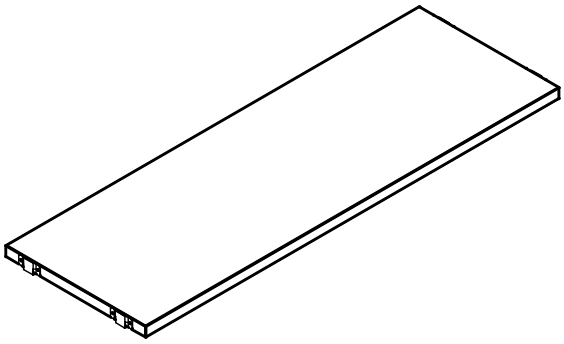

Bottom Panel

F x 1

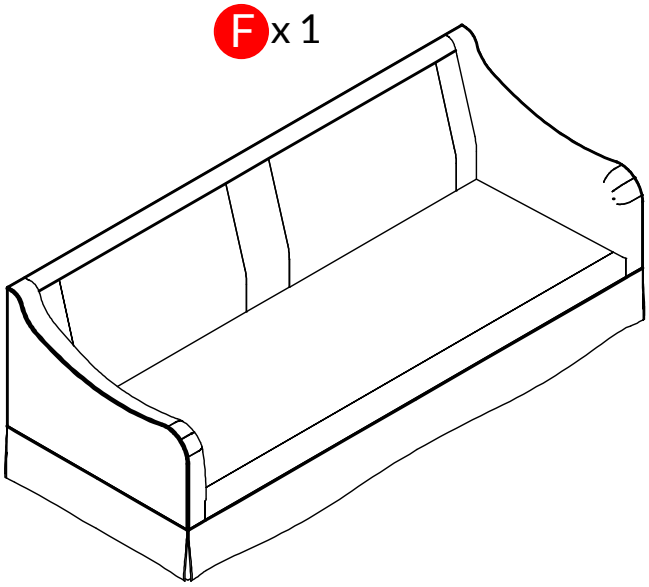

Cloth Cover

G x 1

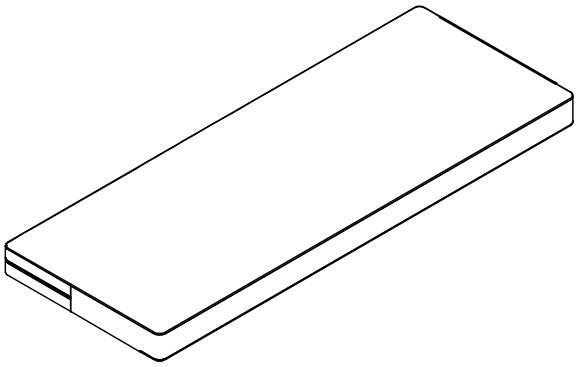

Seat Cushion

I x 2

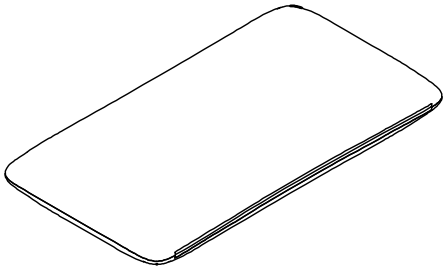

Pillow

J x 4

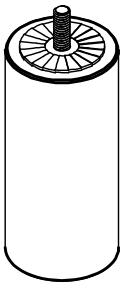

Leg

K x 1

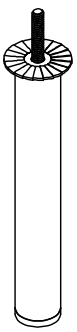

Support Leg

Parts List (Carton B)

D x 1

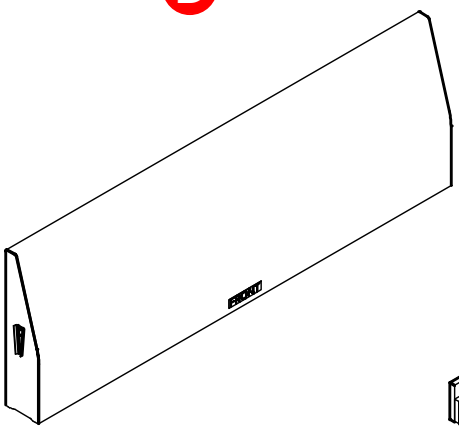

Backrest

E x 1

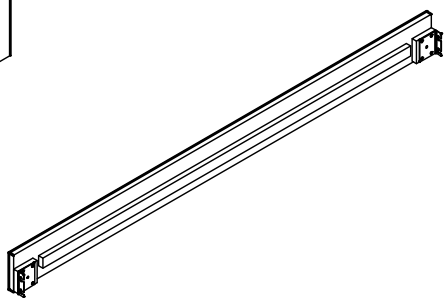

Front Rail

H x 2

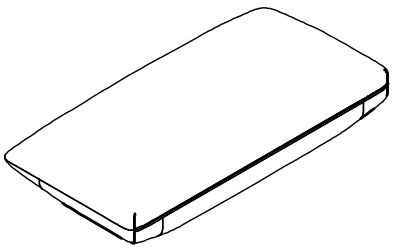

Back Cushion

Hardware List *(in Carton A)*

1 x 4+1

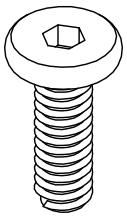

Bolt-φ5/16" X 23mm

2 x 1

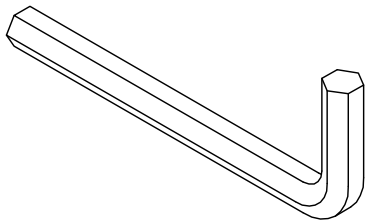

Allen Key-M 5

ASSEMBLY INSTRUCTIONS

Step 1

Place all parts on a clean, smooth surface.
Manually screw Leg (J) x 4 to Left Arm (A) and Right Arm (B) .

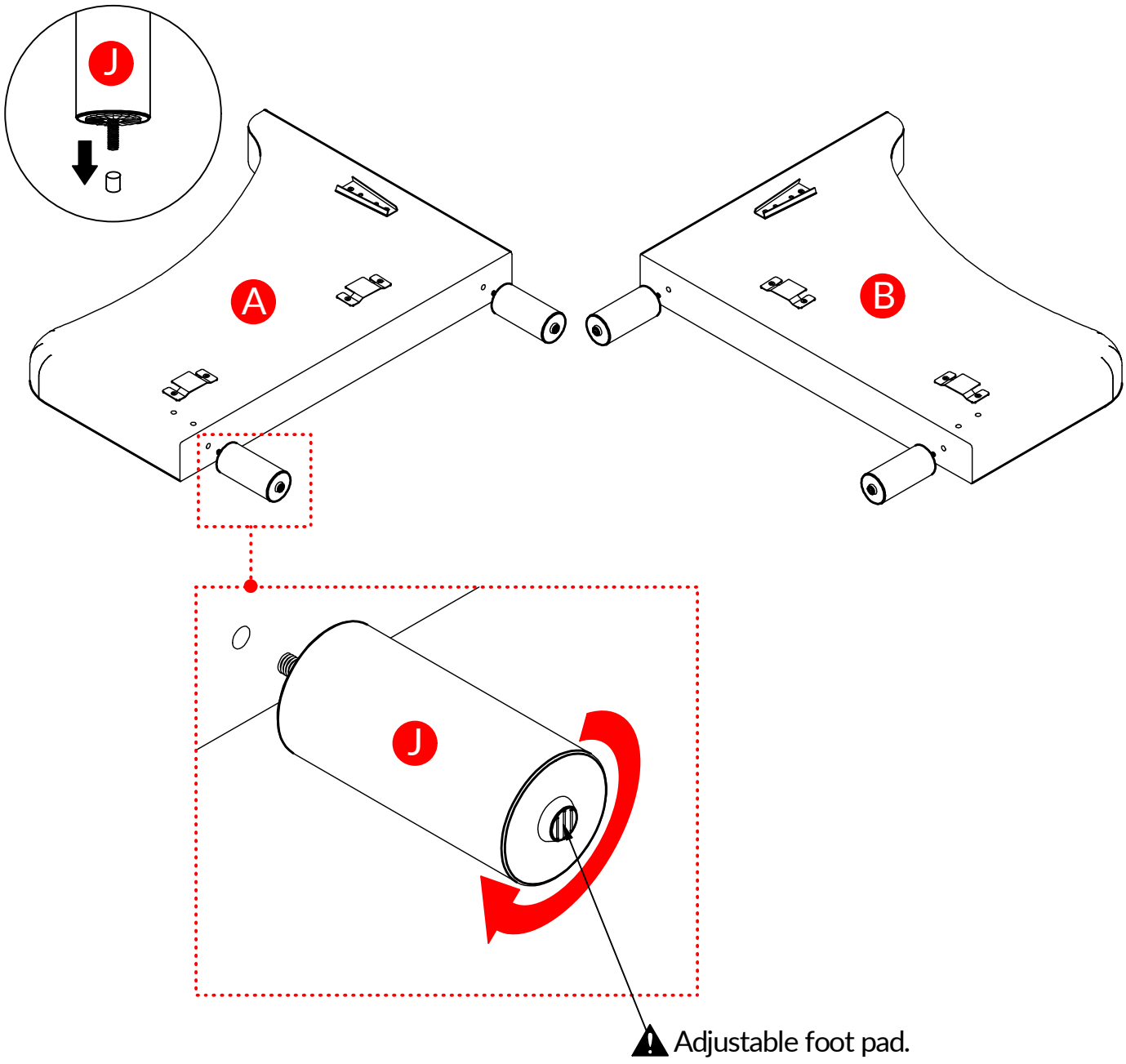

Step 2

Attach Front Rail (E) to Left Arm (A) and Right Arm (B) with Bolts 1 .

1	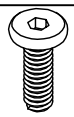	x 4	φ5/16" X 23mm
2	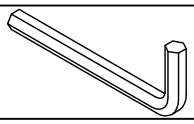	x 1	Allen Key-M 5

Step 3

Manually screw Support Leg (K) to Bottom Panel (C).

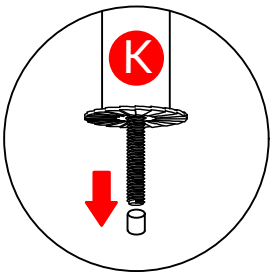

Attention:
Remove the nut from the sofa leg.

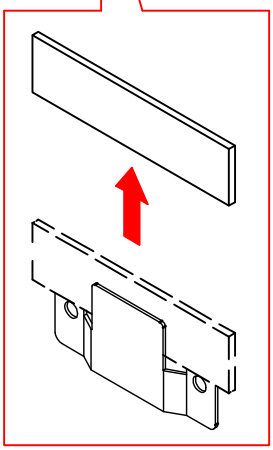

Attention:
First remove the cardboard from the metal insert.

Step 4

Attach Bottom Panel (C) to Arms (A) and (B) by inserting the metal brackets on Bottom Panel (C) into the metal glides on Arms (A) and (B).
Push Bottom Panel (C) with a downward force to secure it into place.

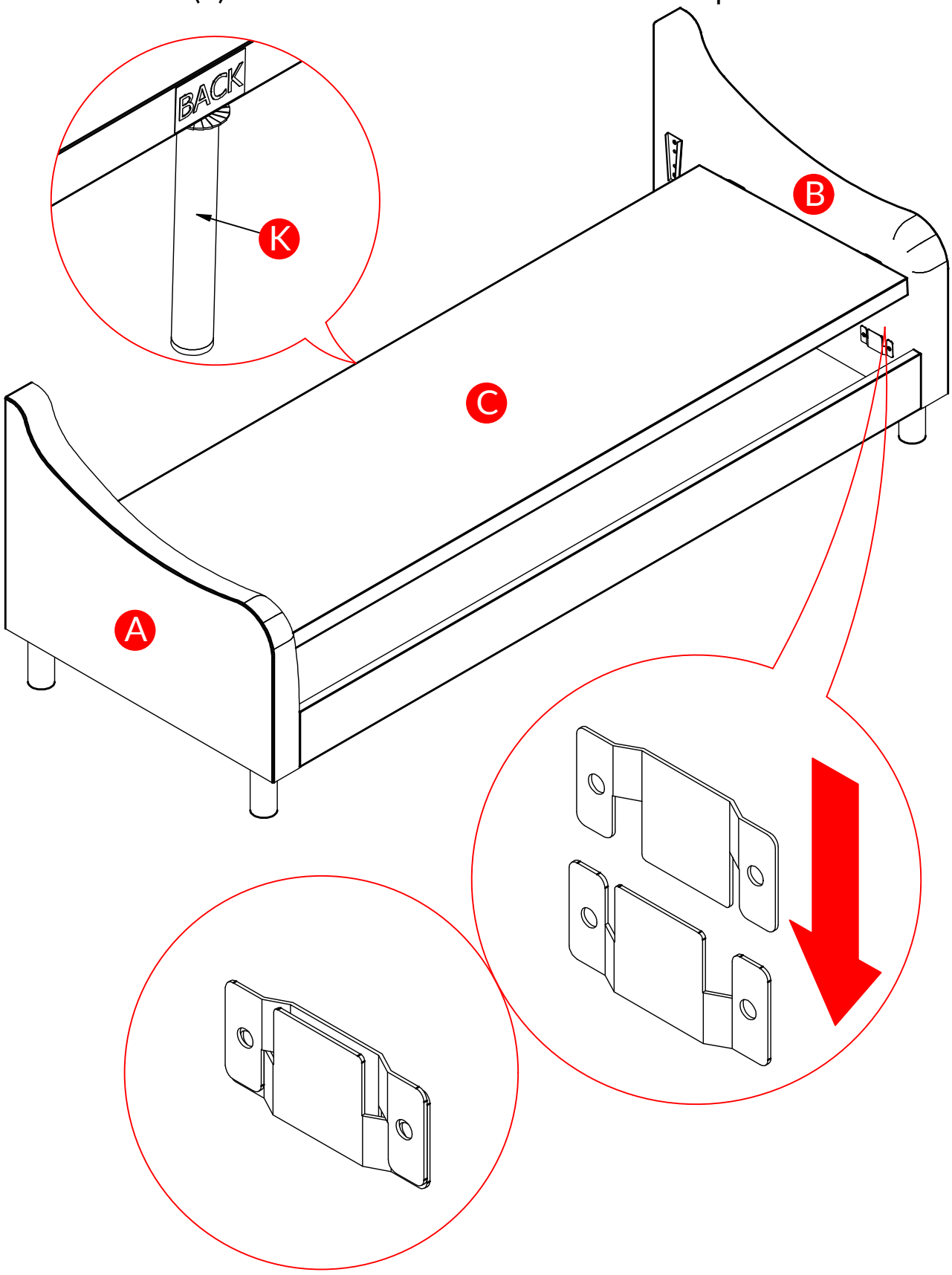

Step 5

Attach Backrest (D) to Arms (A) and (B) by inserting the brackets on Backrest (D) to the metal glides on Arms (A) and (B).
Push Backrest (D) with a downward force to secure it into place.

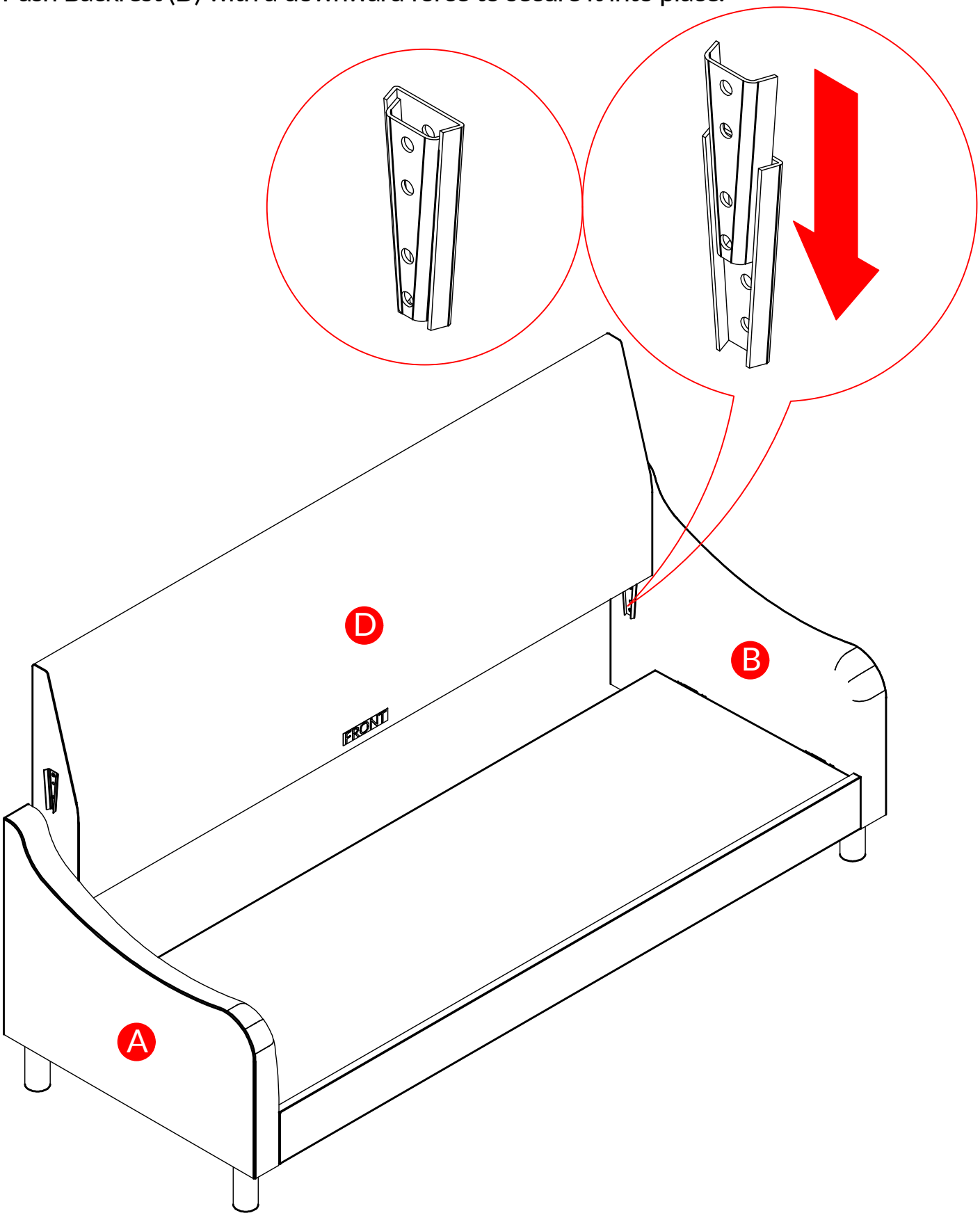

Step 6

Put the Cloth Cover (F) on the sofa.

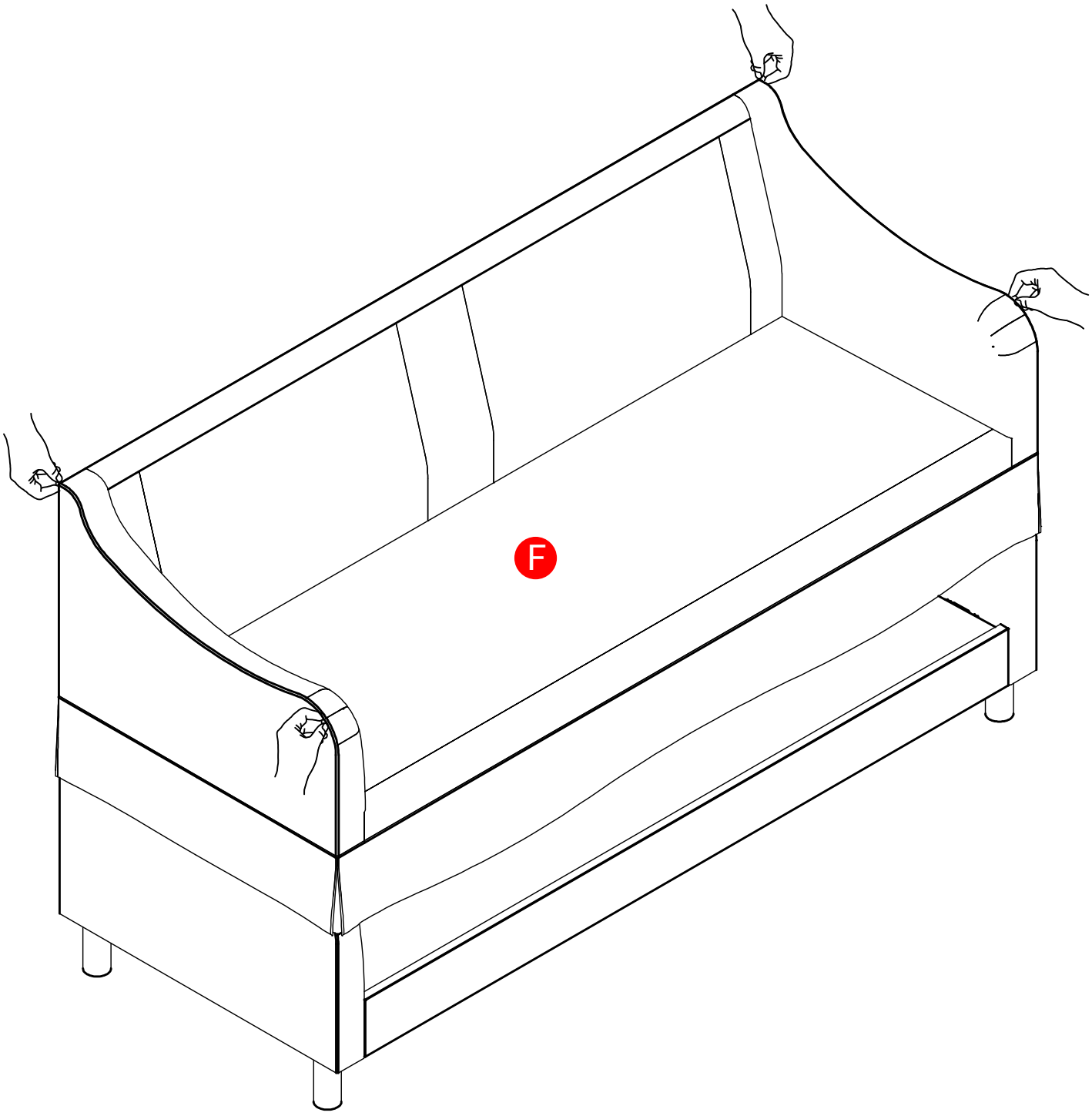

Step 7

Remove the Cushions from their vacuumed sealed package.

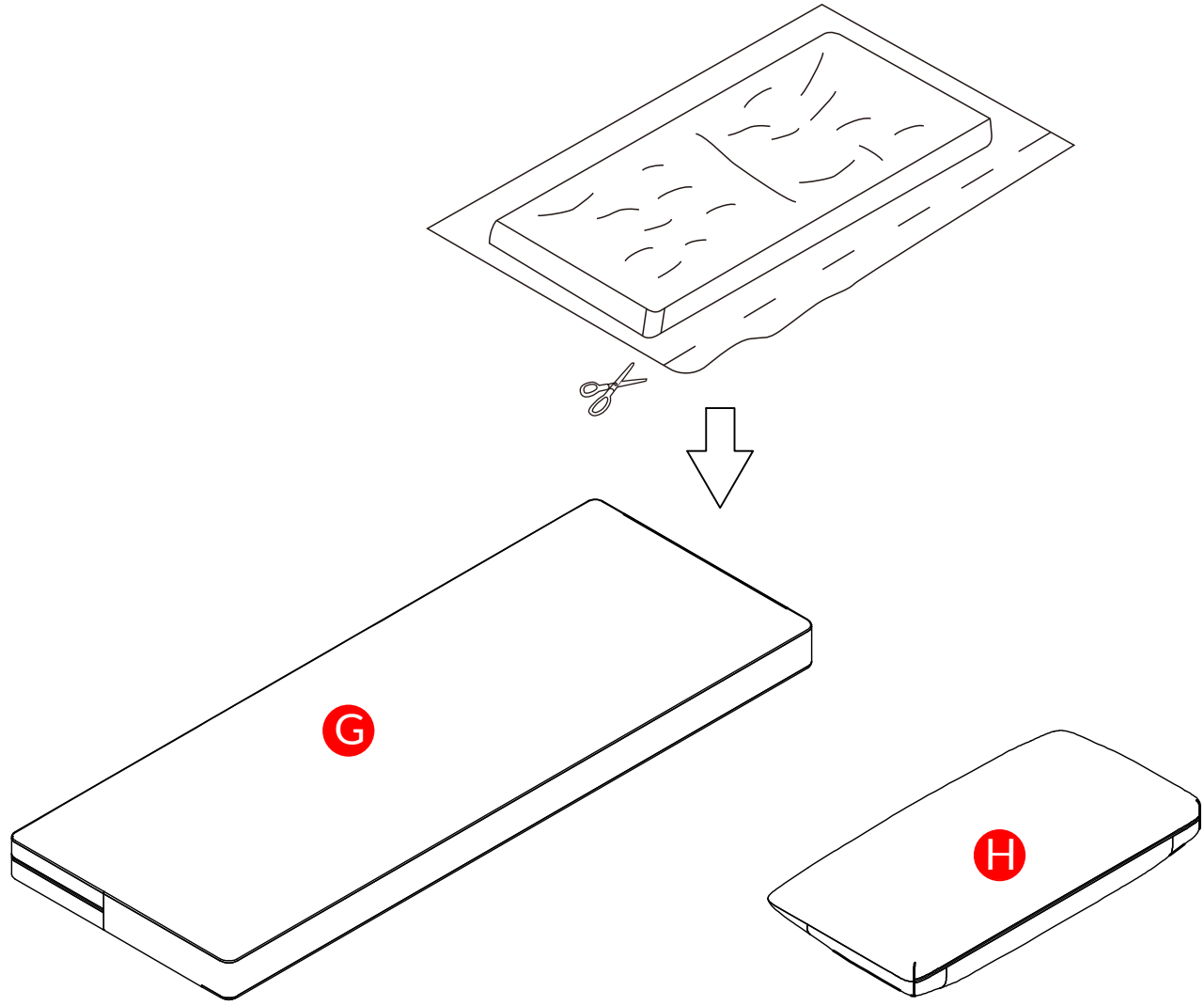

After unpacking all components, allow 48 hours for the compressed foam or polyester pillow fill to spring back. Blowing with a hair dryer or patting the mat with your hands will speed up the process.

Step 8

Place the Cushions onto the sofa.

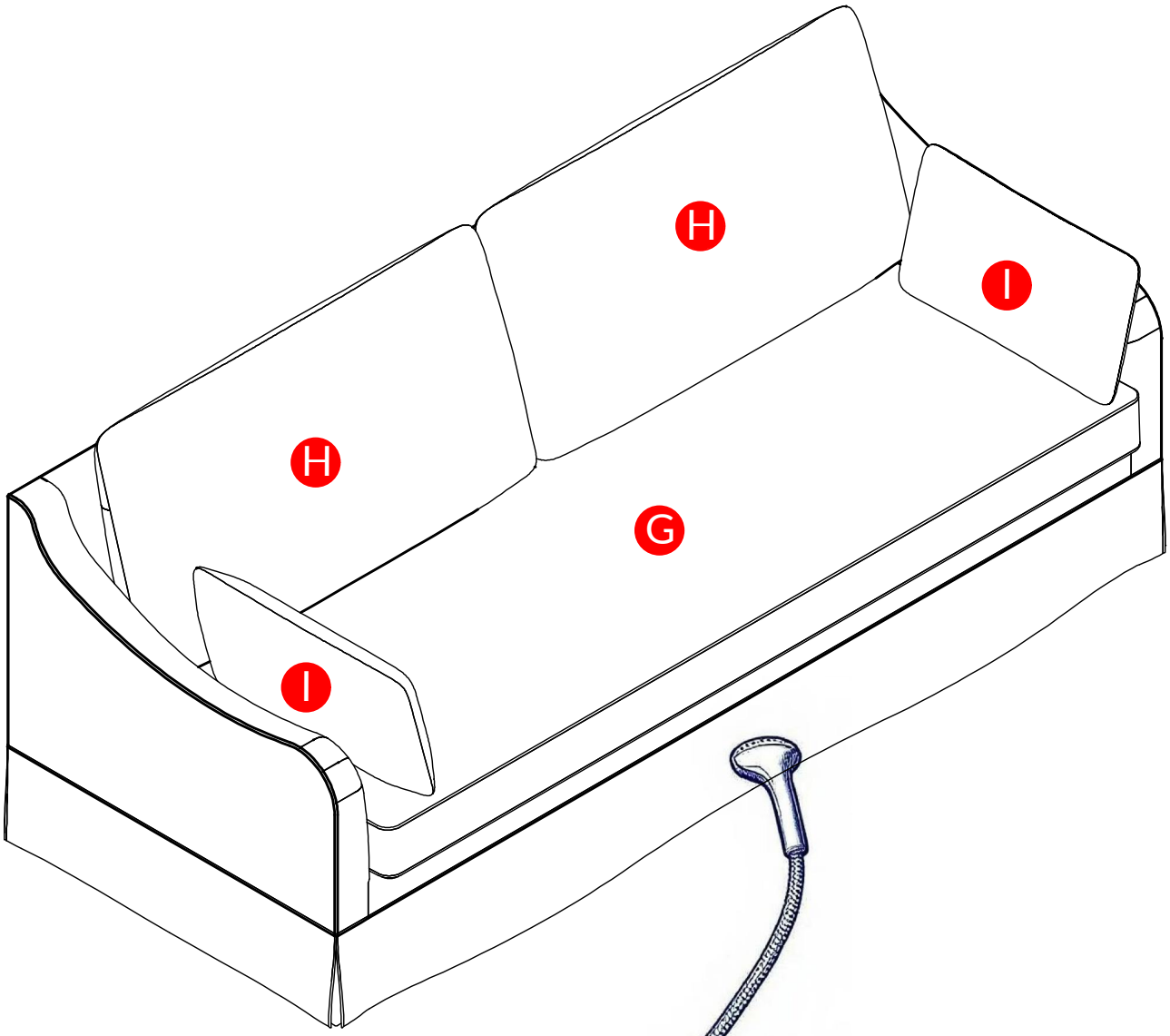

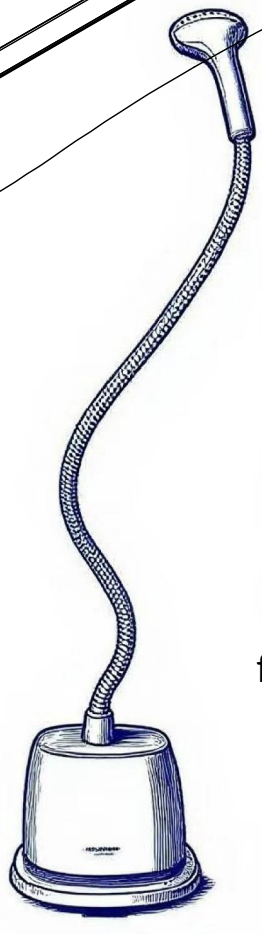

If necessary, iron the fabric cover with a steam iron to loosen wrinkles.

Adaptive Design, Effortless Living.

HULALA®
HOME

WWW.HULALAHOME.COM
Email: customerservice@hulalahome.com
Call us: +1(833)324-2464 (8 AM to 5 PM PST Monday-Friday)