USER MANUAL

ARMOIRE WARDROBE CLOSET WITH DRAWERS

Model: JY-260131

TOOLS REQUIRED

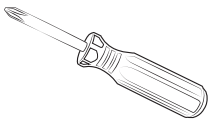

Phillips screwdriver
(Not included)

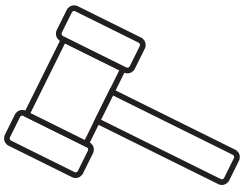

Hammer
(Not included)

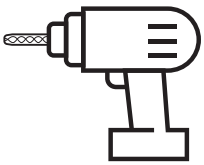

Drill
(Not included)

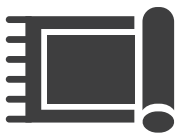

Protective blanket
(Not included)



ATTENTION

Keep children and pets away while assembling.



How to use cam locks

CAM LOCK FASTENING SYSTEM

This Cam Lock Fastening System will be used throughout the assembly process.

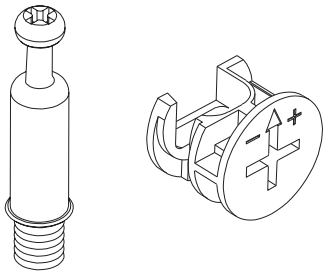

1

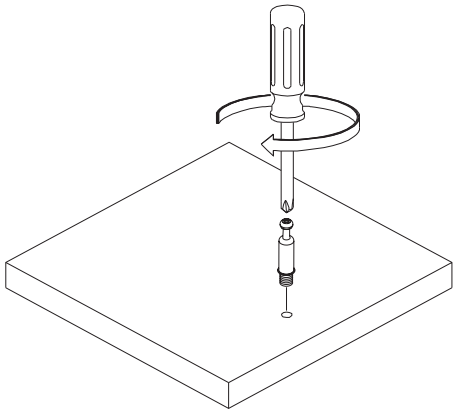

2

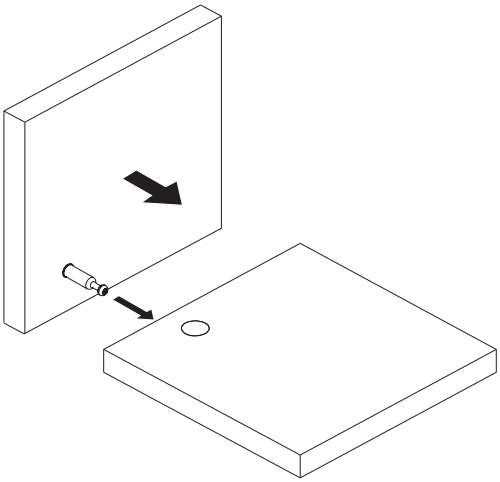

3

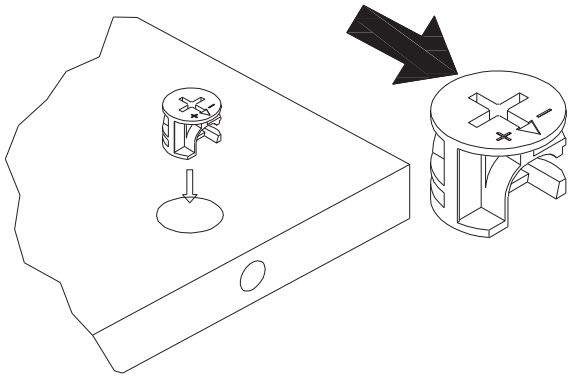

4

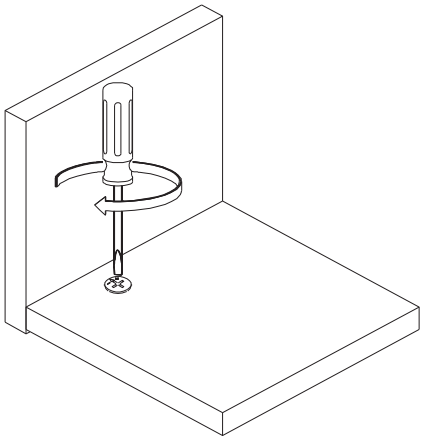



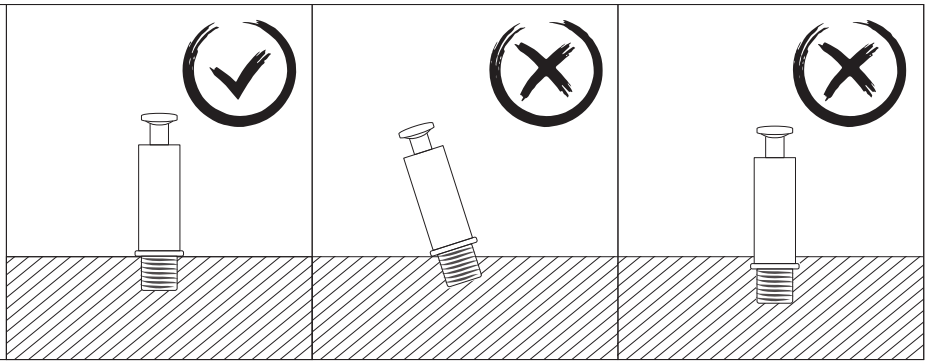

EN

INTRODUCTION

Thank you for choosing our products. Please read the instructions carefully and keep them for future reference. If you need further assistance, please contact our customer service online via email.

PRECAUTIONS

1. When installing the product, use a soft underlay (such as carpet or cardboard) to avoid scratching or damaging the surface of the product.
2. Please try to use a manual screwdriver instead of electric screw driver. A manual screwdriver can be used to better control the tightness of the screws.
3. Do not use any glue.
4. The product is unstable before it is assembled. Please pay attention to the product installation sequence.
5. The structure of this product can not meet the requirements of the placement of heavy items and children climbing.

WARRANTY

We provides an **18 Month** Warranty on all products starting from the date of original purchase. If the product has any manufacturing defect, please contact customer service via email with your order number and other details to the problem. We will send you further information about the return or exchange.

PACKAGE CONTAINS

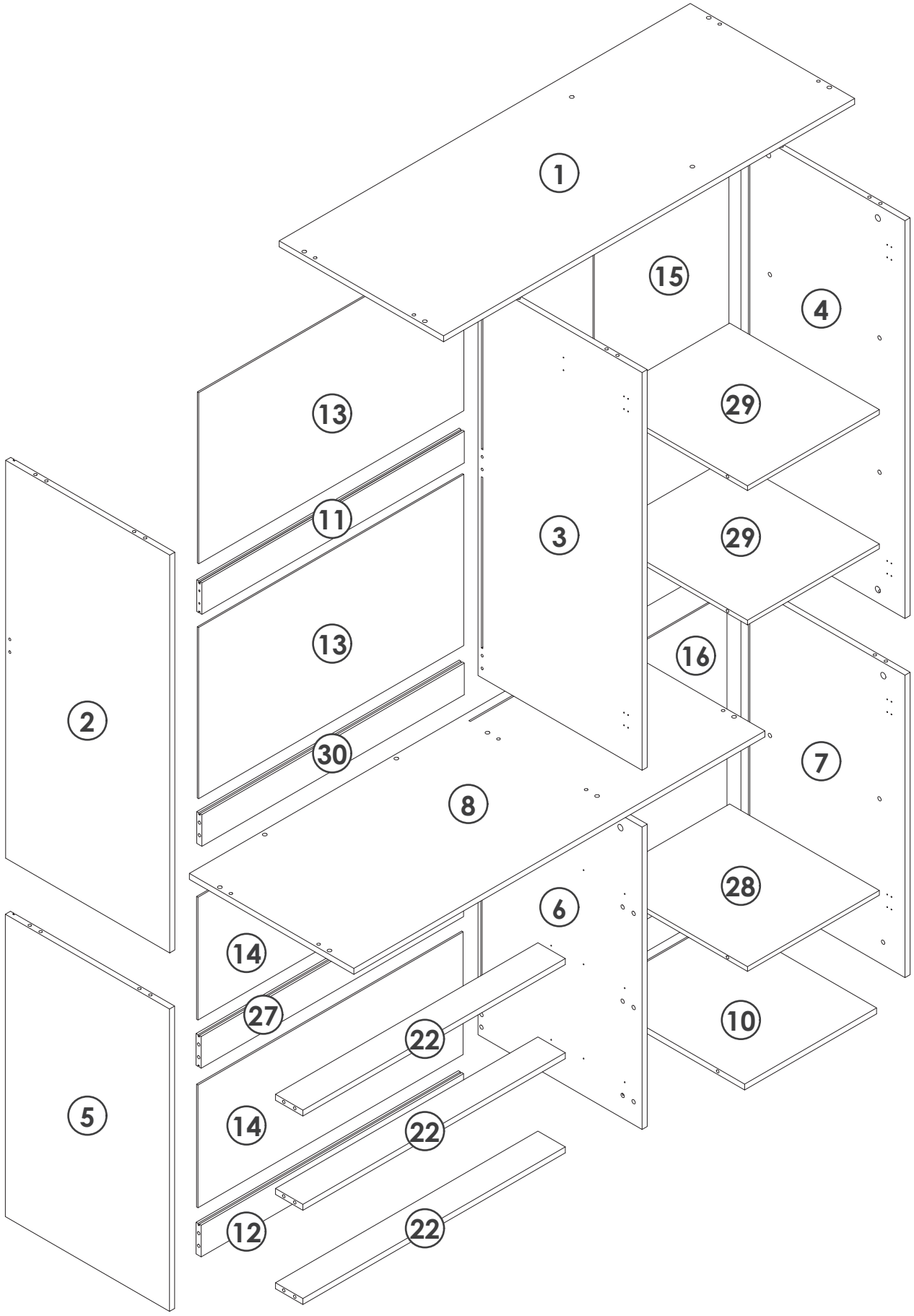

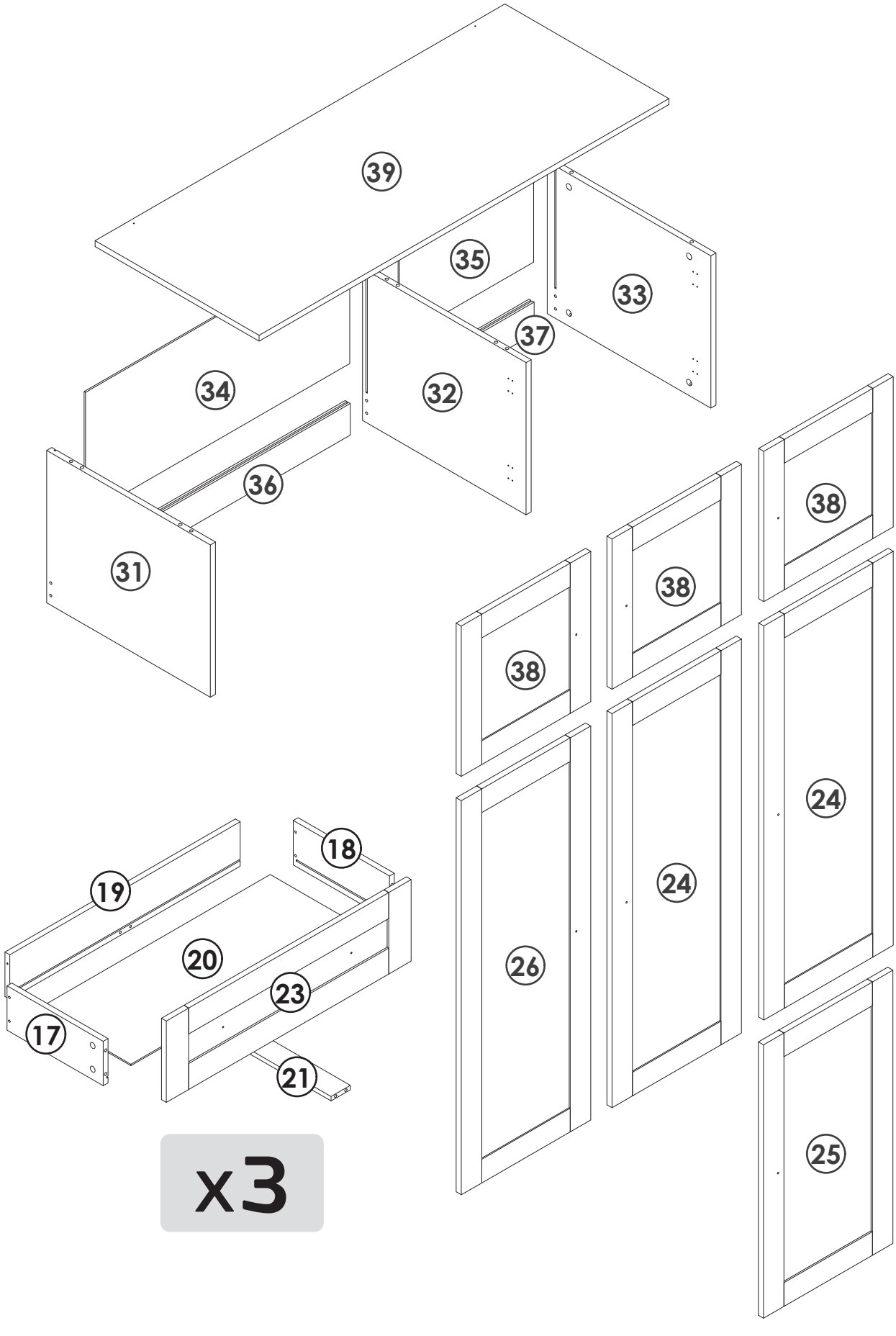
39
35
33
37
34
32
36
31
38
38
38
24
24
26
18
19
20
23
17
21
25
x3

HARDWARES LIST

A x88

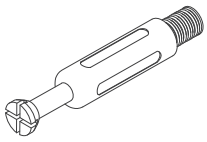

M6*40mm

B x88

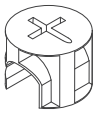

M15*11mm

C x112

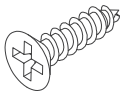

M3.5*14mm

D x32

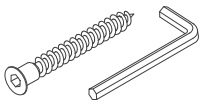

M5*40mm

E x6

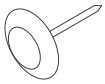

F x26

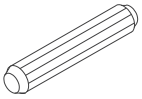

M8*40mm

G x2

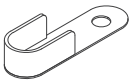

H x2

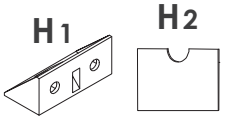

J x13

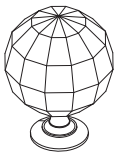

K x6

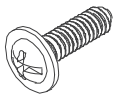

M4*10mm

L x3

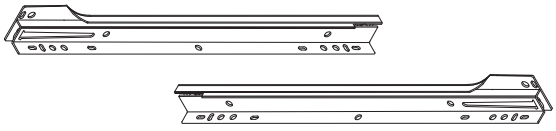

M x18

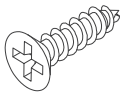

M3*12mm

N x1

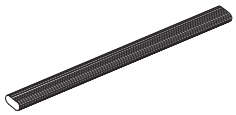

P x14

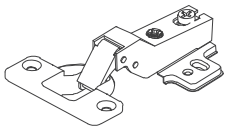

Q x7

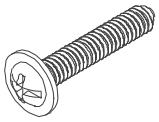

M4*20mm

R x30

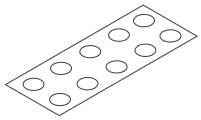

S x58

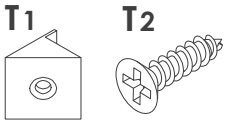

M3*16mm

T x2

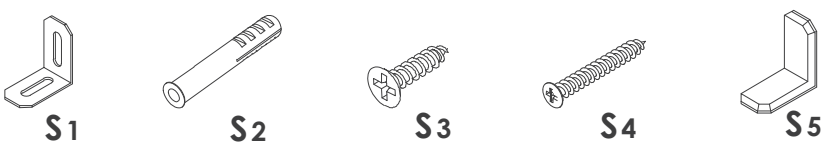

PARTS LIST » A BOX

Unit: (mm)

① x1 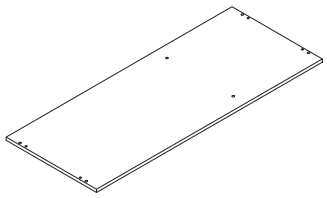 1200*480*15 mm	⑤ x1 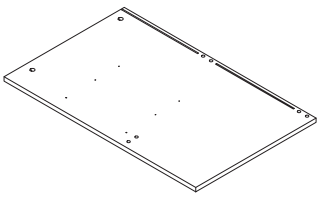 764*480*15 mm	⑦ x1 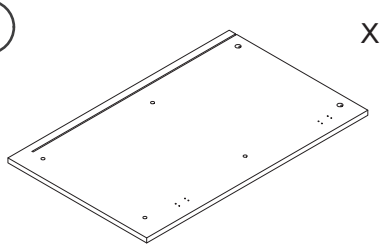 764*480*15 mm
⑧ x1 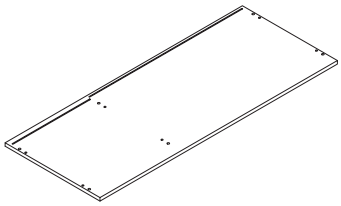 1202*480*15 mm	⑬ x2 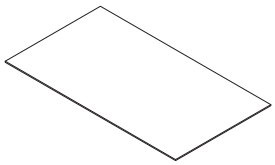 390*774*3 mm	⑭ x2 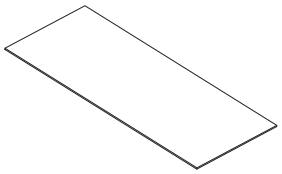 774*310*3 mm
⑮ x1 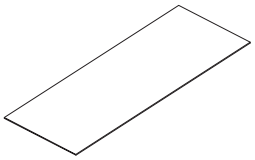 1013*393*3 mm	⑯ x1 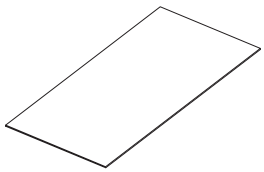 707*393*3 mm	⑰ x3 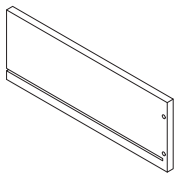 120*320*12 mm
⑱ x3 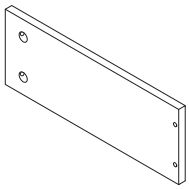 120*320*12 mm	⑲ x3 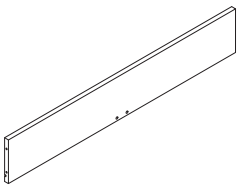 720*120*12 mm	㉕ x1 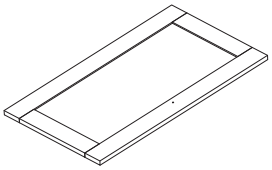 700*380*15 mm
㉘ x1 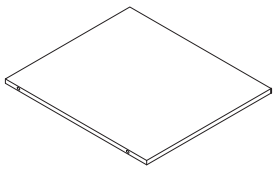 385*436*15 mm	㉚ x1 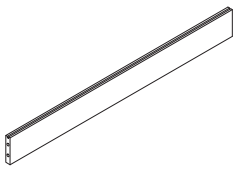 768*80*15 mm	㊳ x3 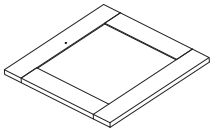 380*379*15 mm
㊴ x1 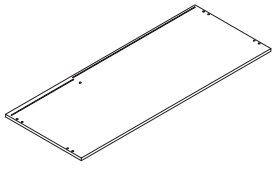 1200*480*15 mm		

PARTS LIST » B BOX

Unit: (mm)

② x1 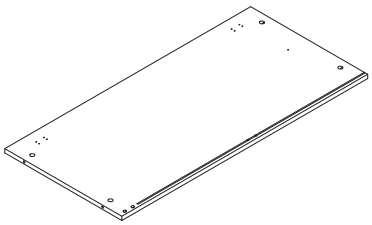 1005*480*15 mm	③ x1 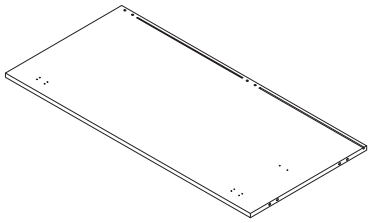 1005*480*15 mm	④ x1 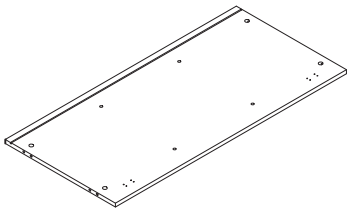 1005*480*15 mm
⑥ x1 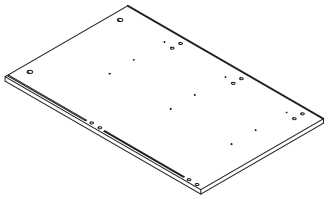 764*480*15 mm	⑩ x1 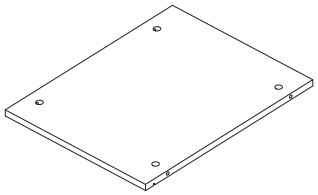 385*478*12 mm	⑪ x3 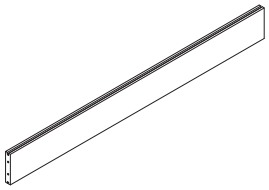 768*80*15 mm
⑫ x3 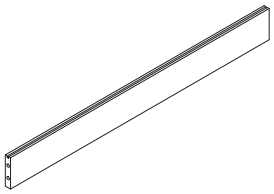 768*80*15 mm	⑳ x1 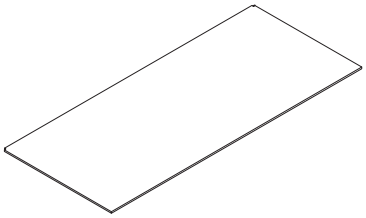 726*295*3 mm	㉑ x3 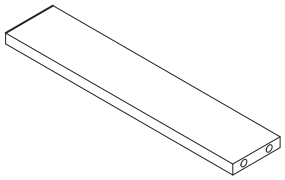 60*287*12 mm
㉒ x3 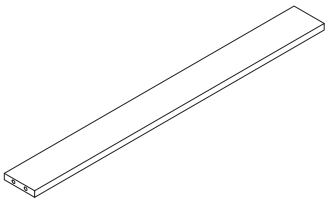 768*80*15 mm	㉓ x3 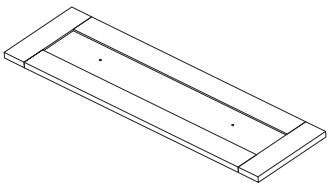 220*764*15 mm	㉔ x1 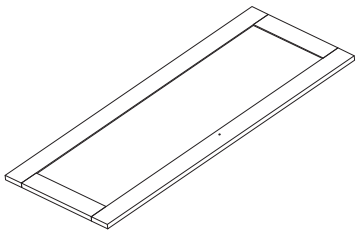 380*999*15 mm
㉖ x1 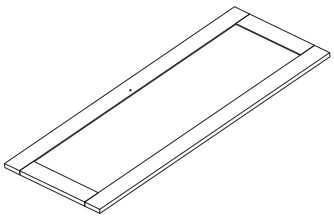 380*999*15 mm	㉗ x1 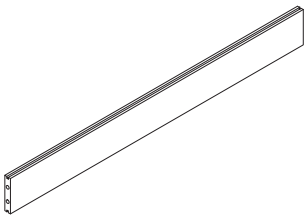 768*80*15 mm	㉙ x2 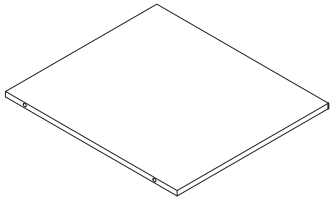 385*436*15 mm

PARTS LIST » B BOX

Unit: (mm)

31 x1 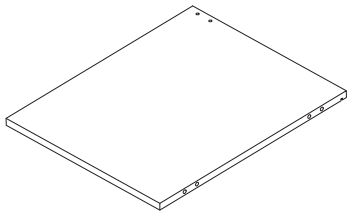 386*479*15 mm	32 x1 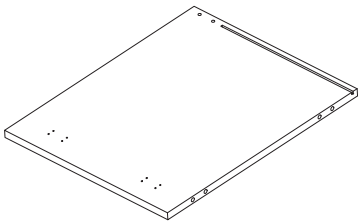 386*479*15 mm	33 x1 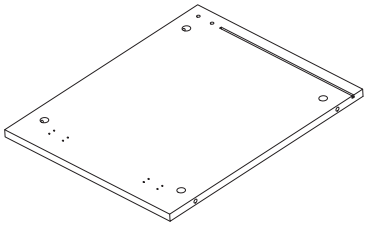 386*479*15 mm
34 x1 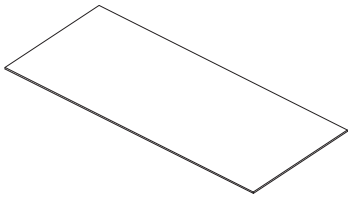 774*364*3 mm	35 x1 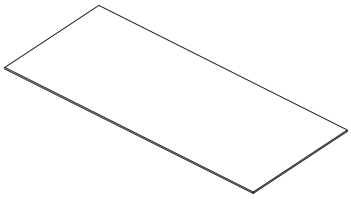 393*314*3 mm	36 x1 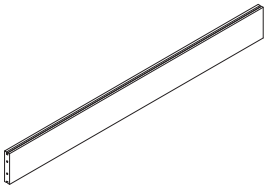 768*80*15 mm
37 x1 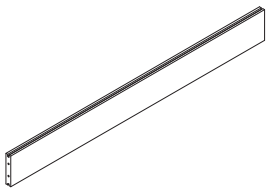 385*80*15 mm		

INSTALLATION INSTRUCTION

L x3pcs



12 inches

L = CR + DR + CL + DL

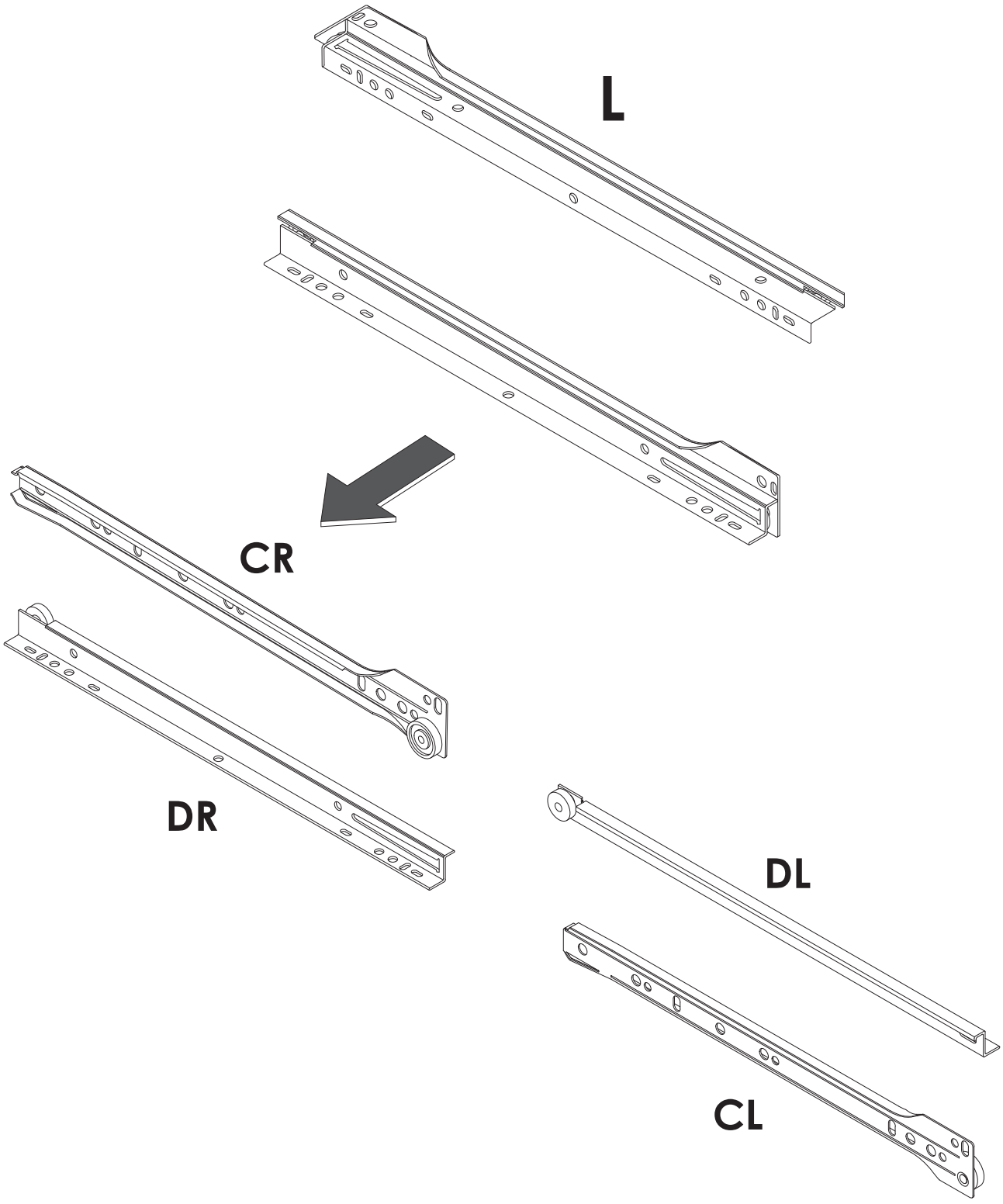

01

C x18pcs



M3.5*14mm

L x3pcs



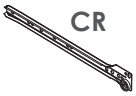

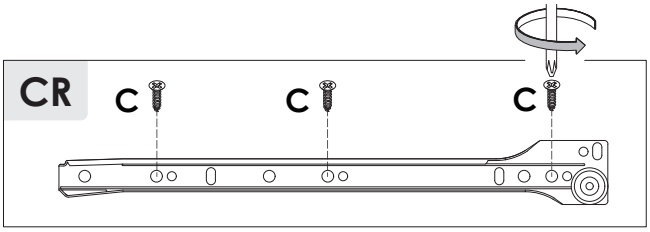

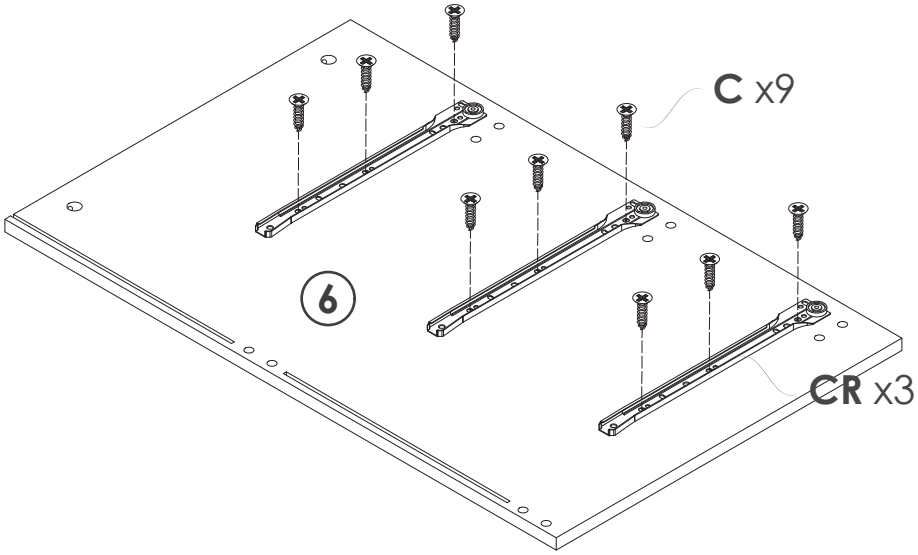

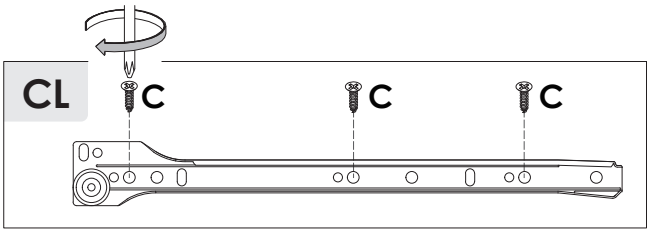

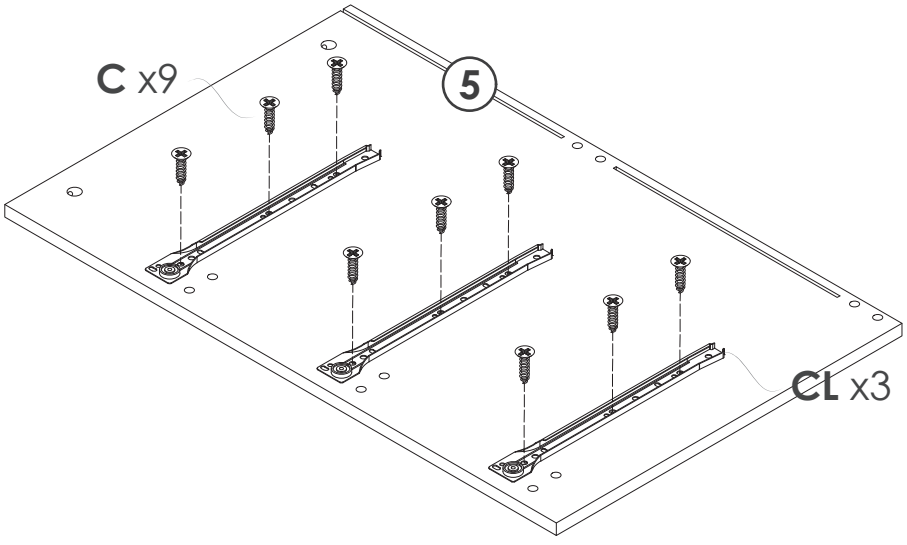

02

A x20pcs



M6*40mm

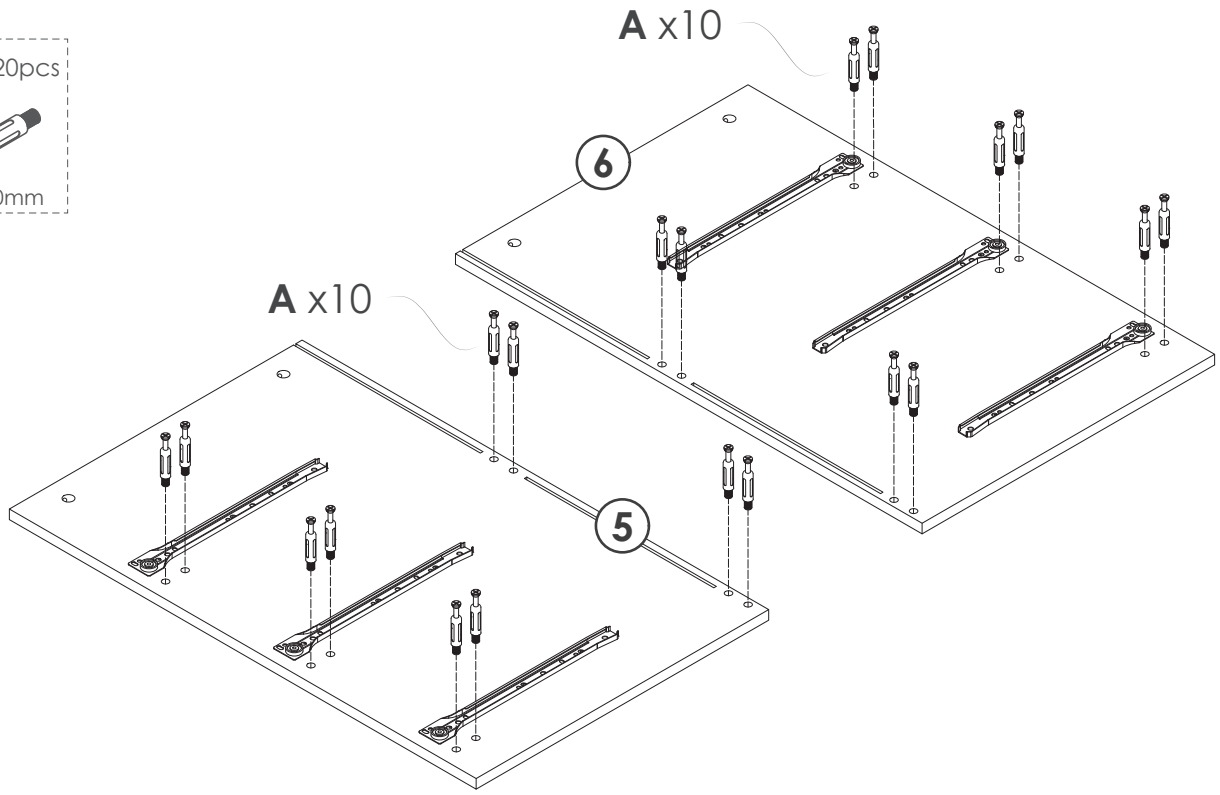

03

E x4pcs

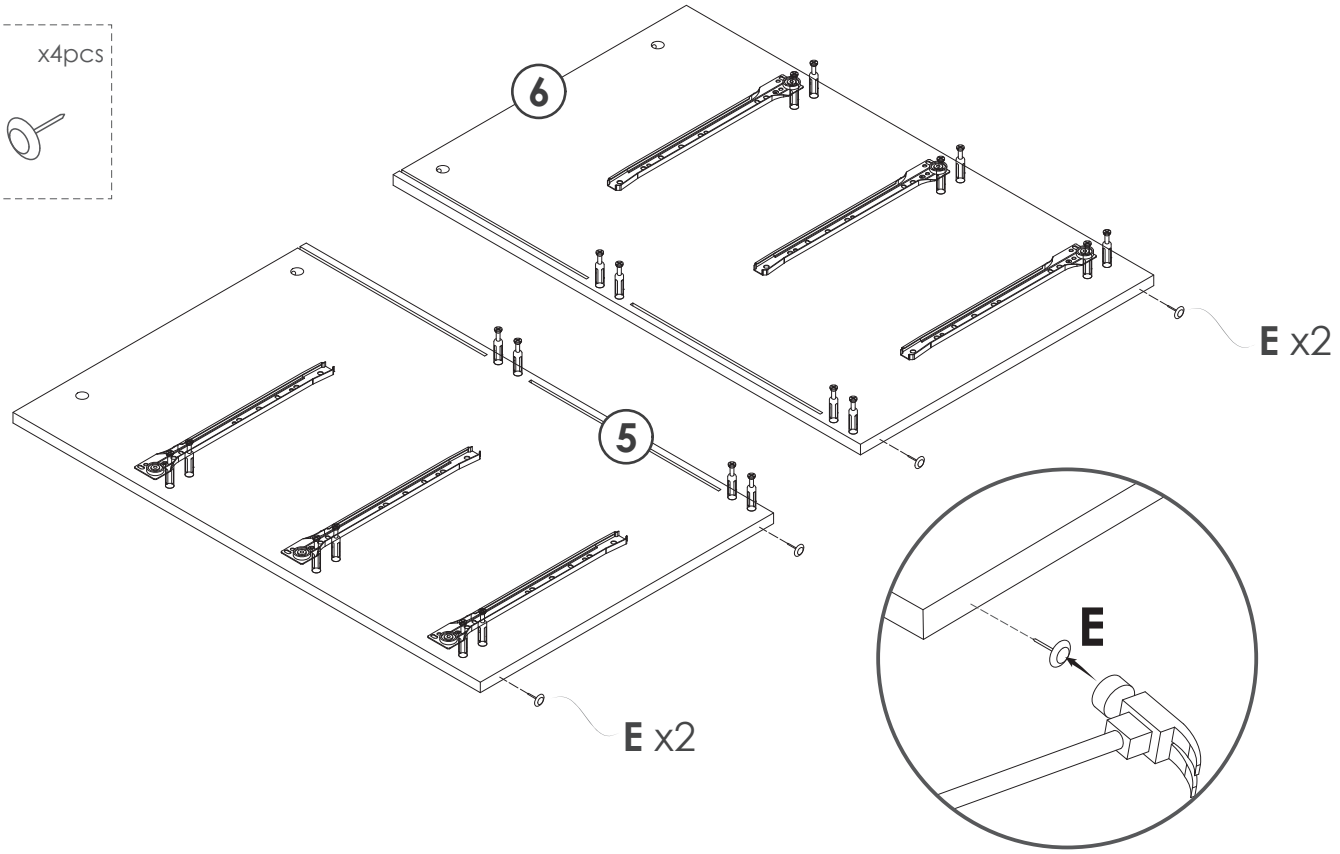

04

B x10pcs



M15*11mm

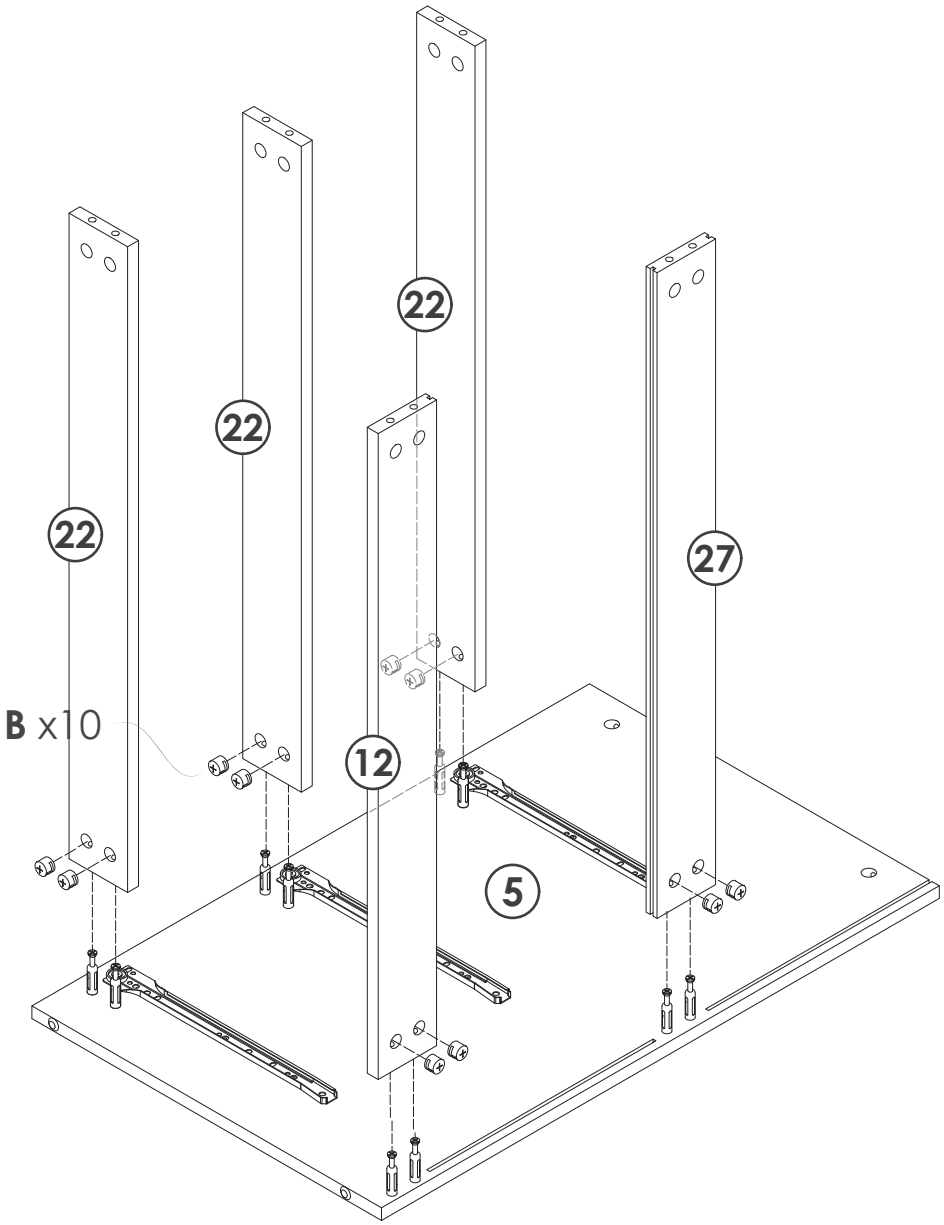

05

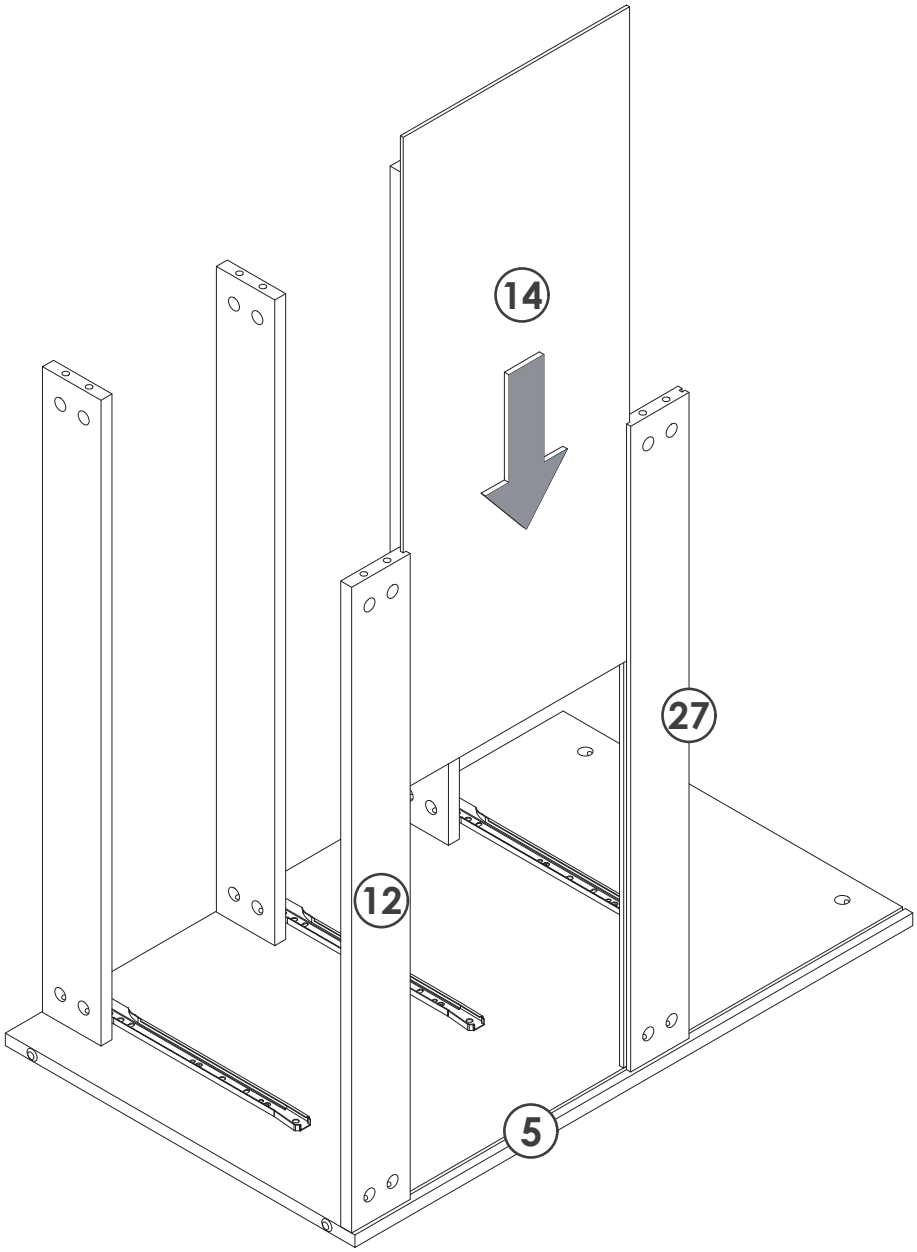

06

B x10pcs



M15*11mm

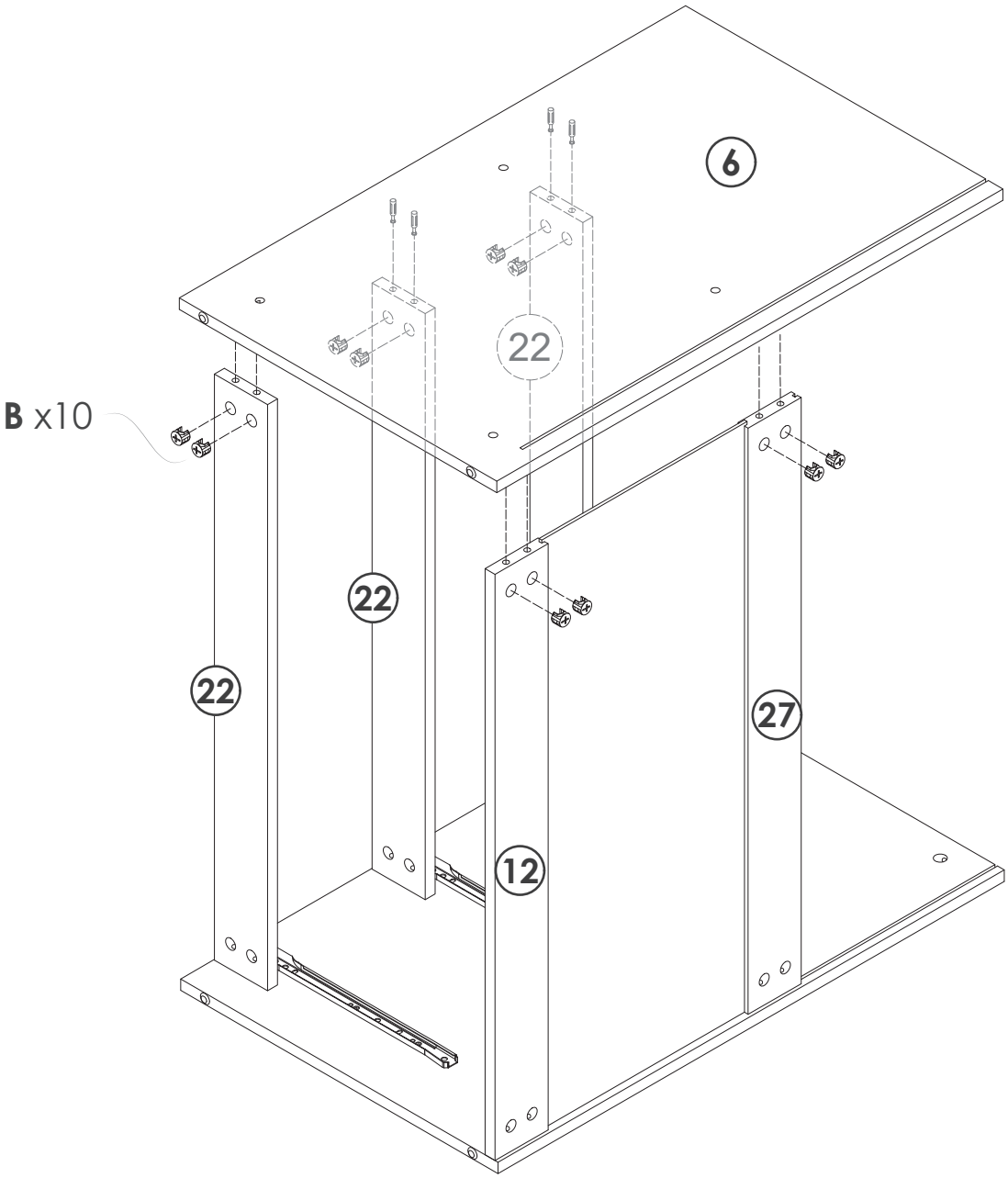

07

A x4pcs



M6*40mm

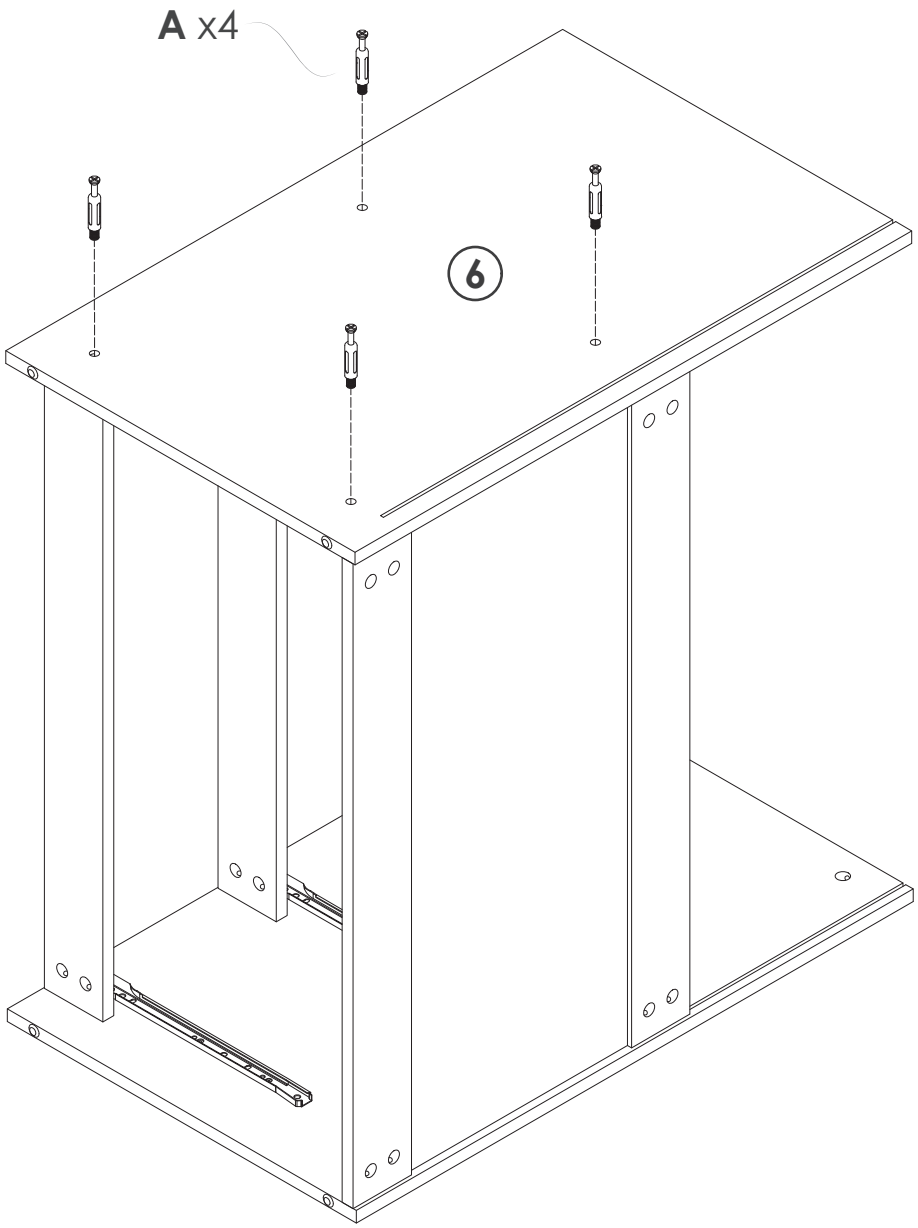

08

B x4pcs



M15*11mm

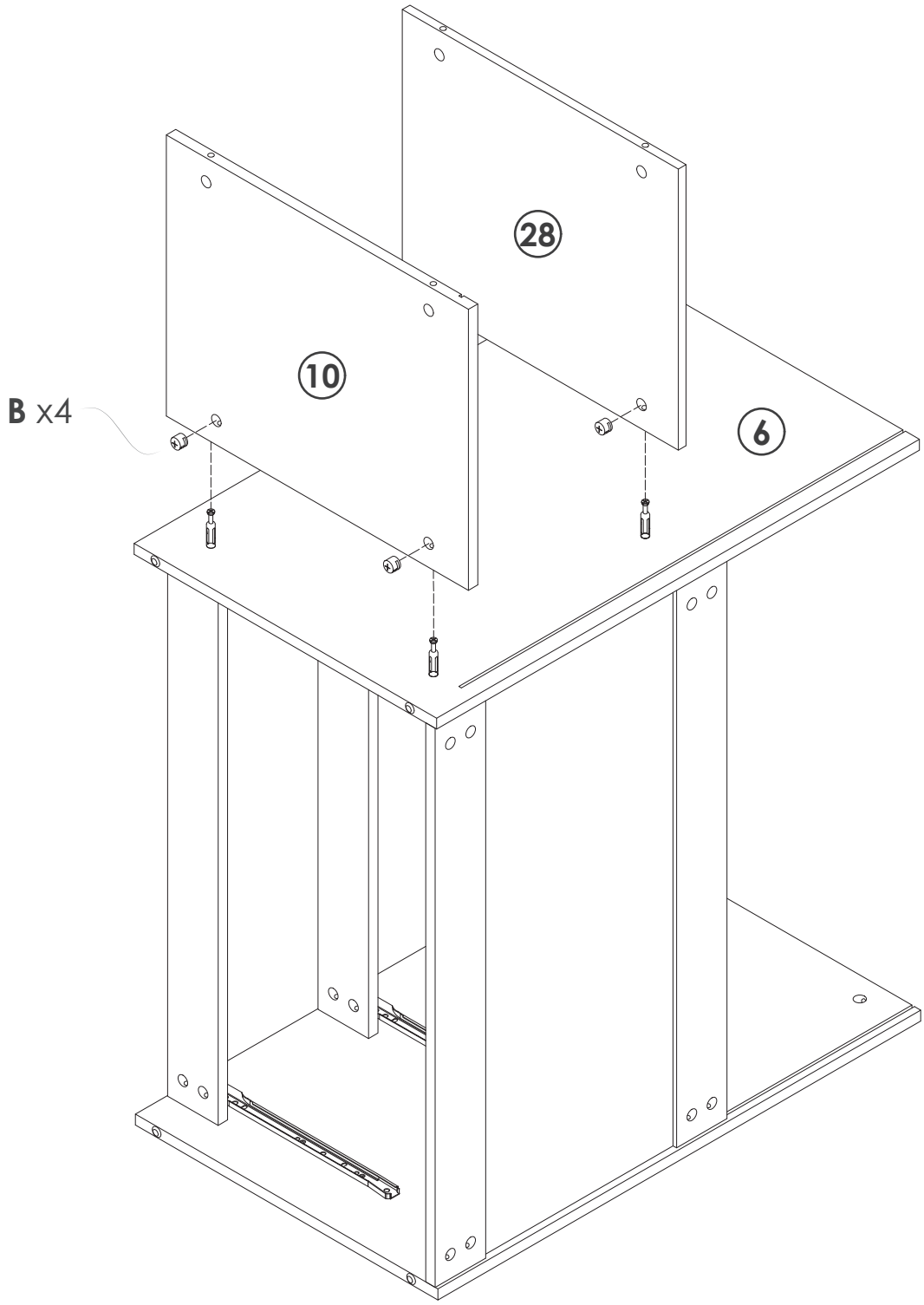

09

A	x4pcs
	M6*40mm
B	x4pcs
	M15*11mm
E	x2pcs
	

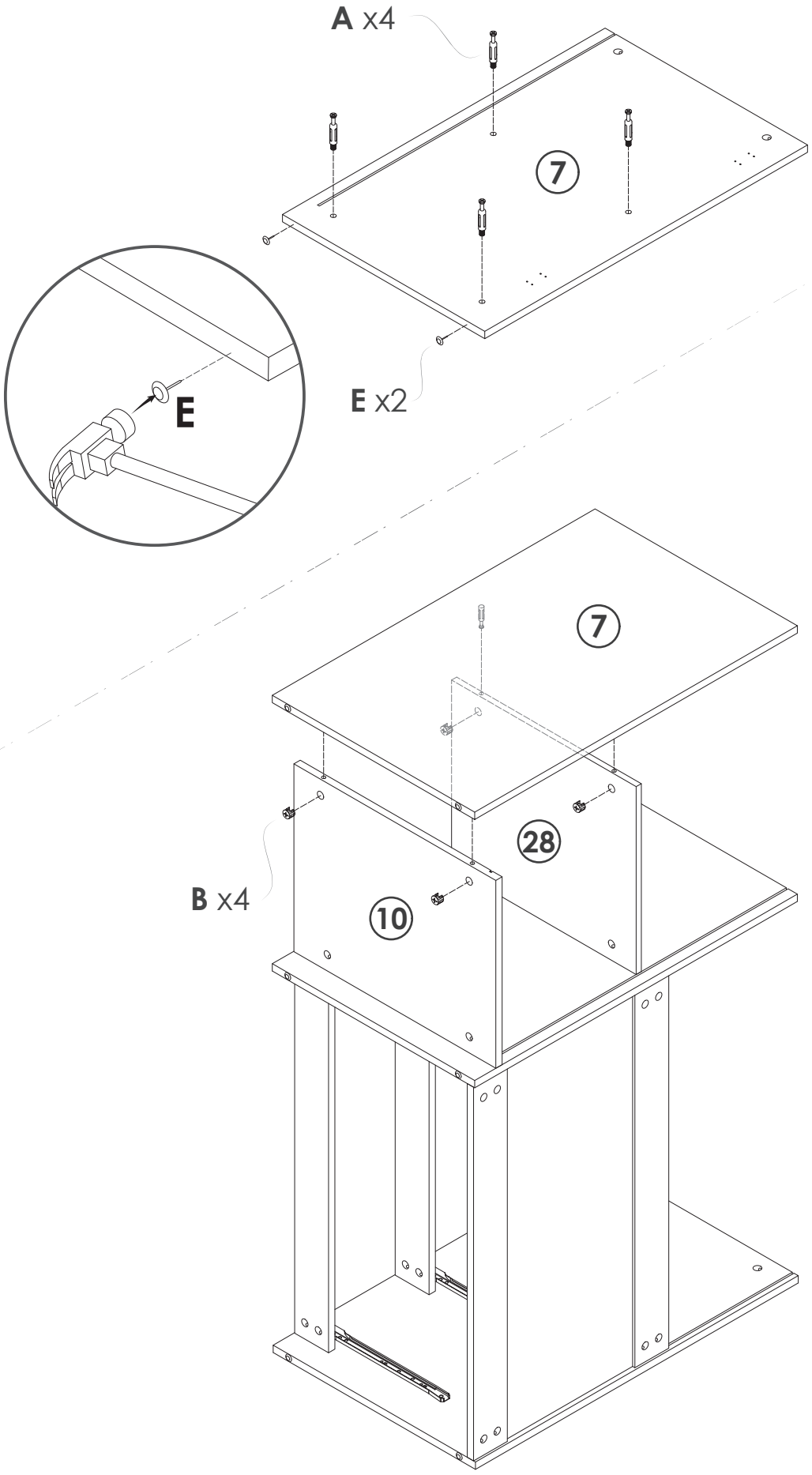

10

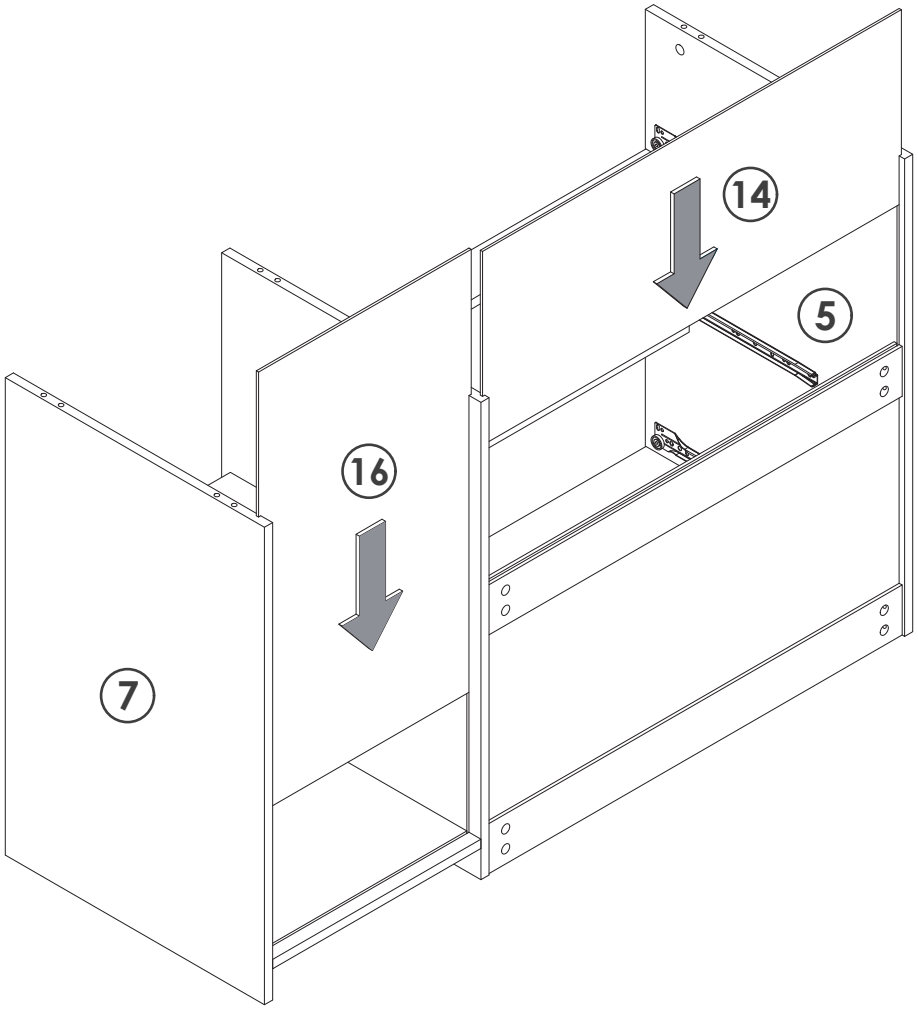

11

F x6pcs



M8*40mm

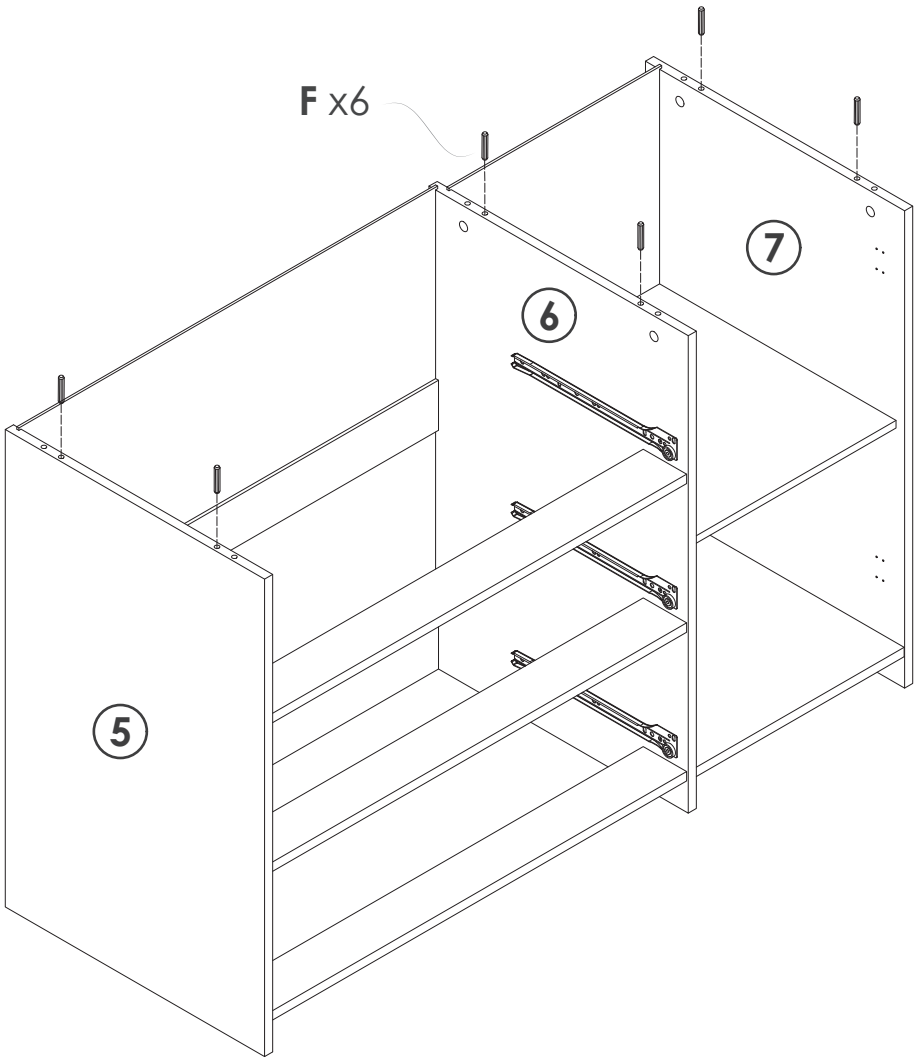

12

A x6pcs



M6*40mm

B x6pcs



M15*11mm

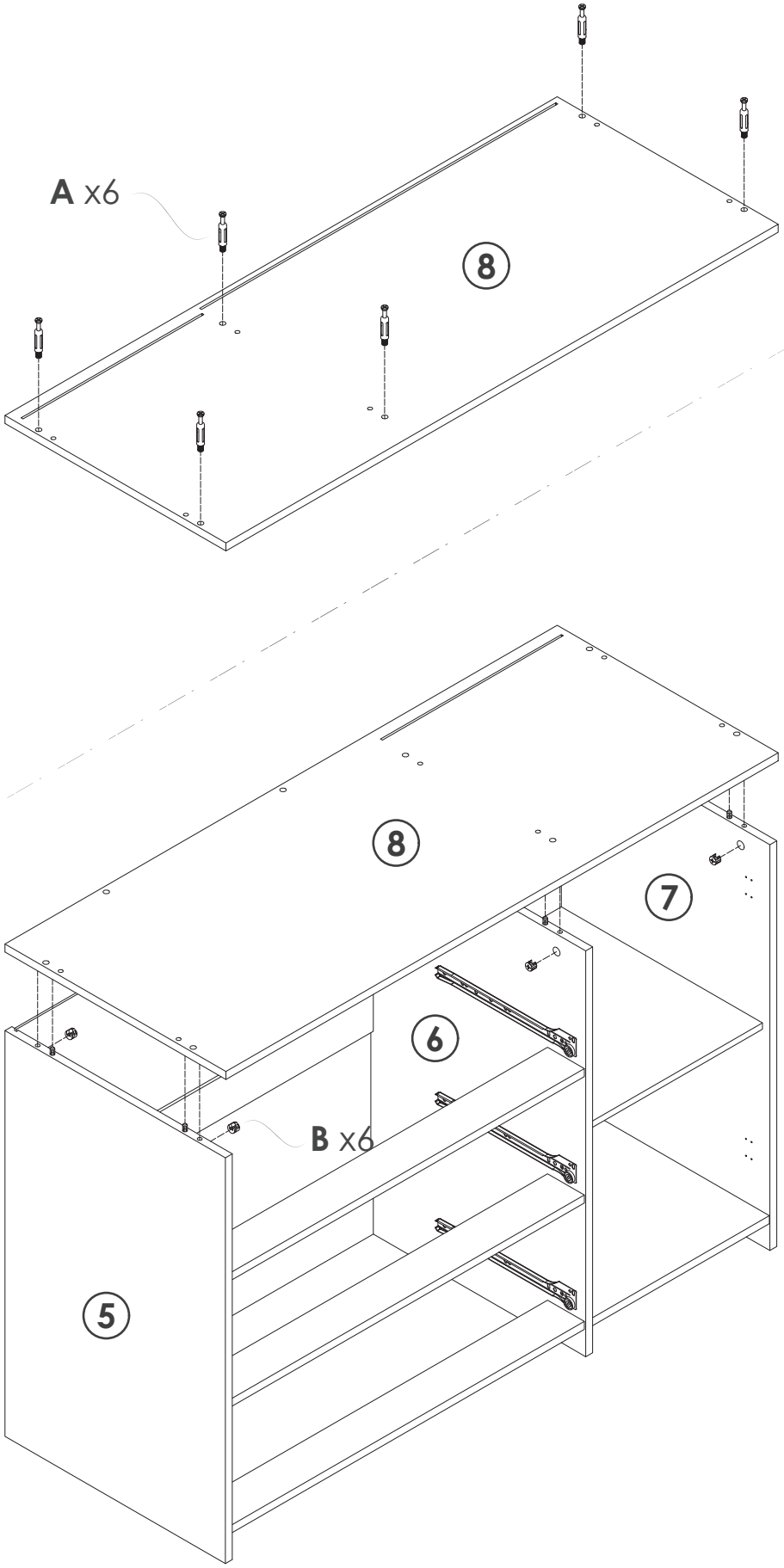

13

A x8pcs



M6*40mm

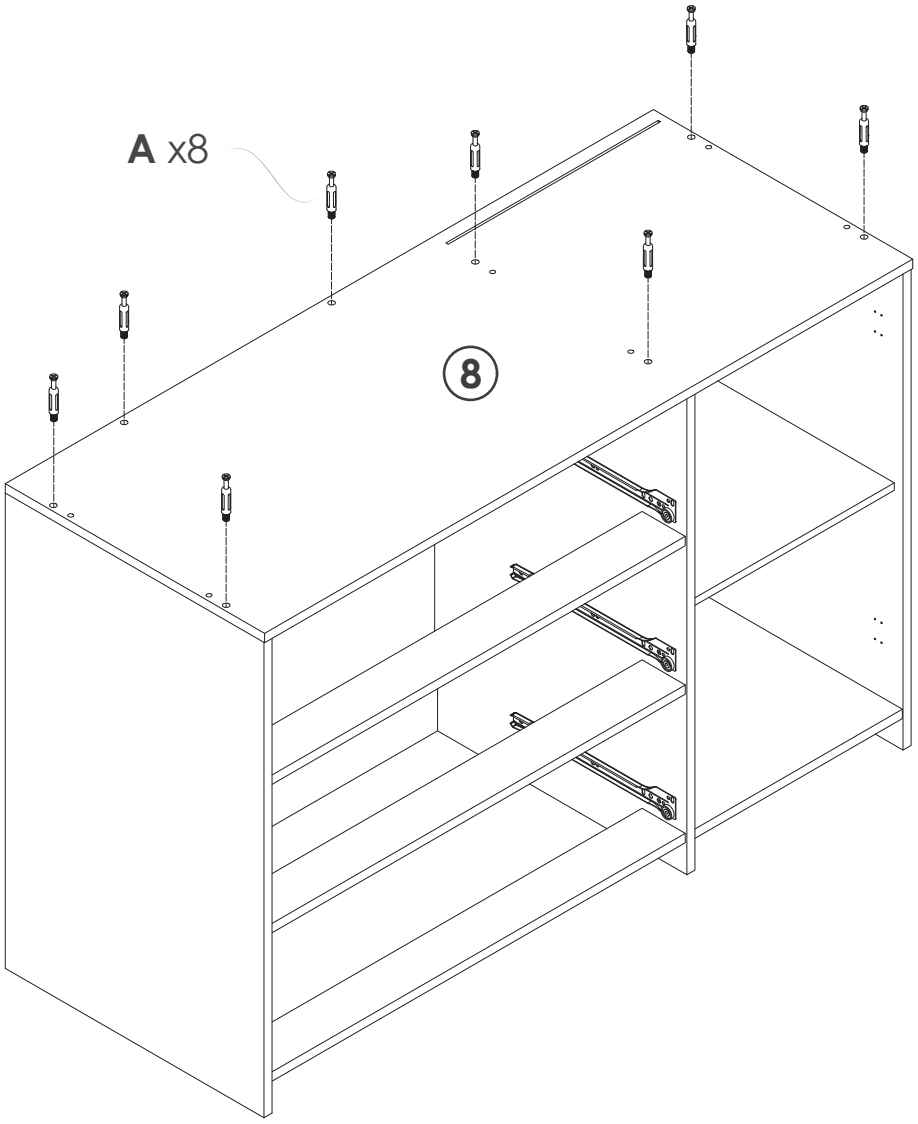

14

A x8pcs



M6*40mm

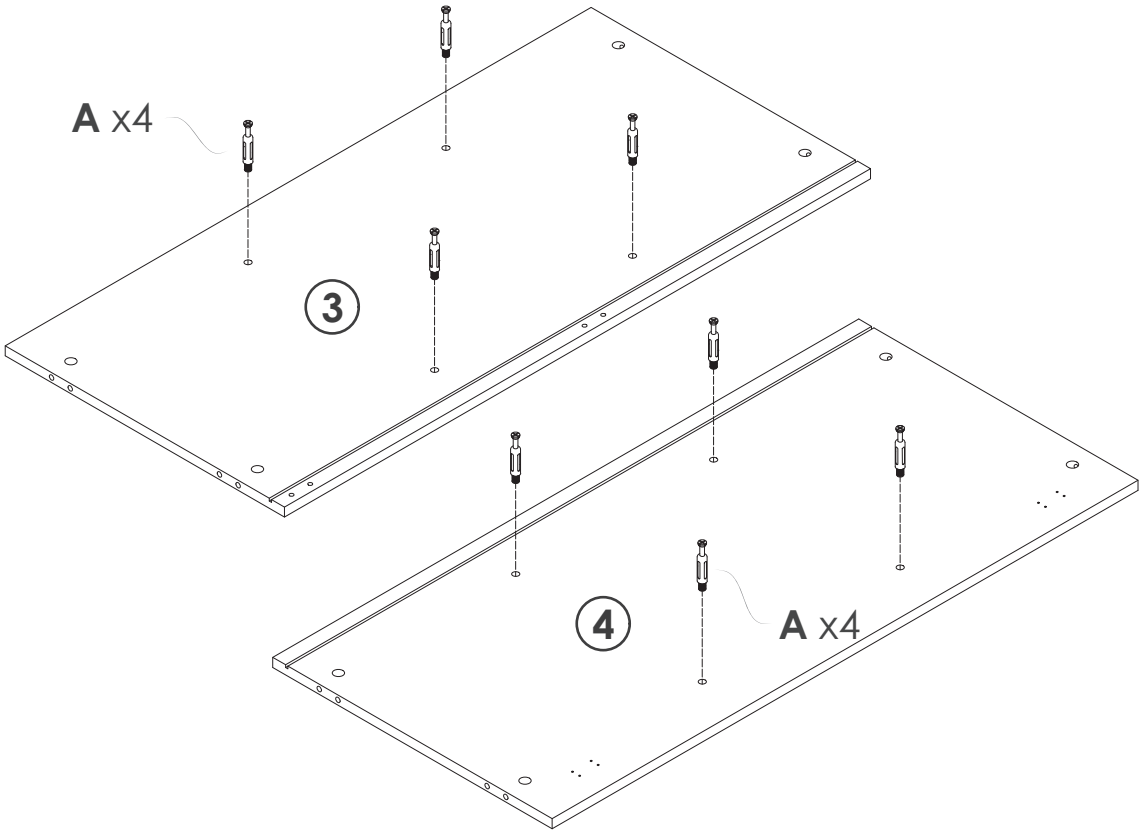

15

B x4pcs

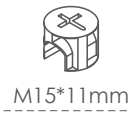

M15*11mm

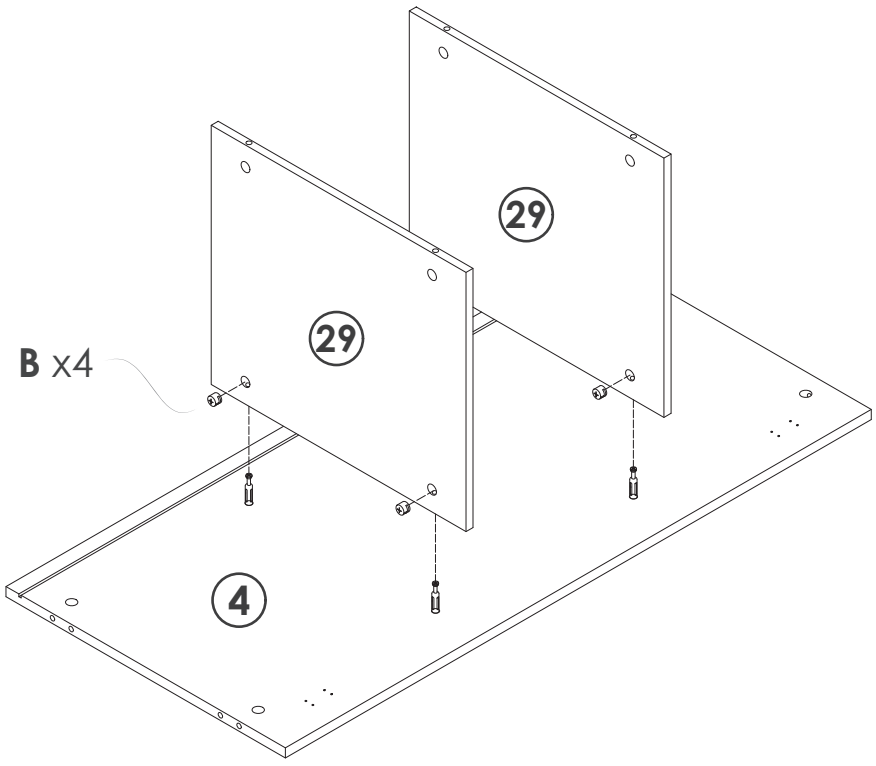

16

B x4pcs



M15*11mm

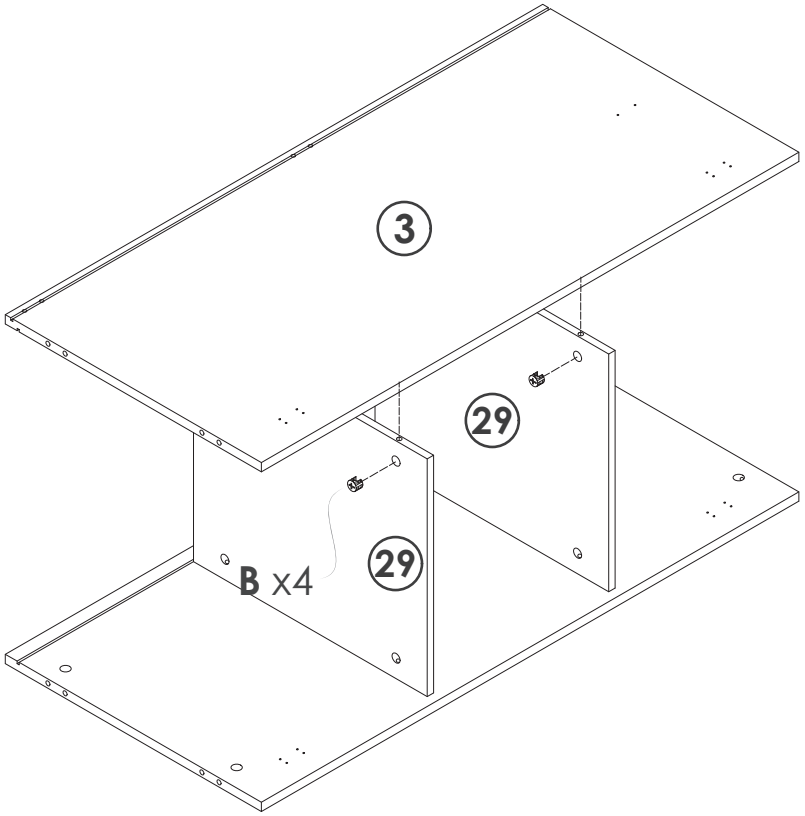

17

C x2pcs



M3.5*14mm

G x1pc



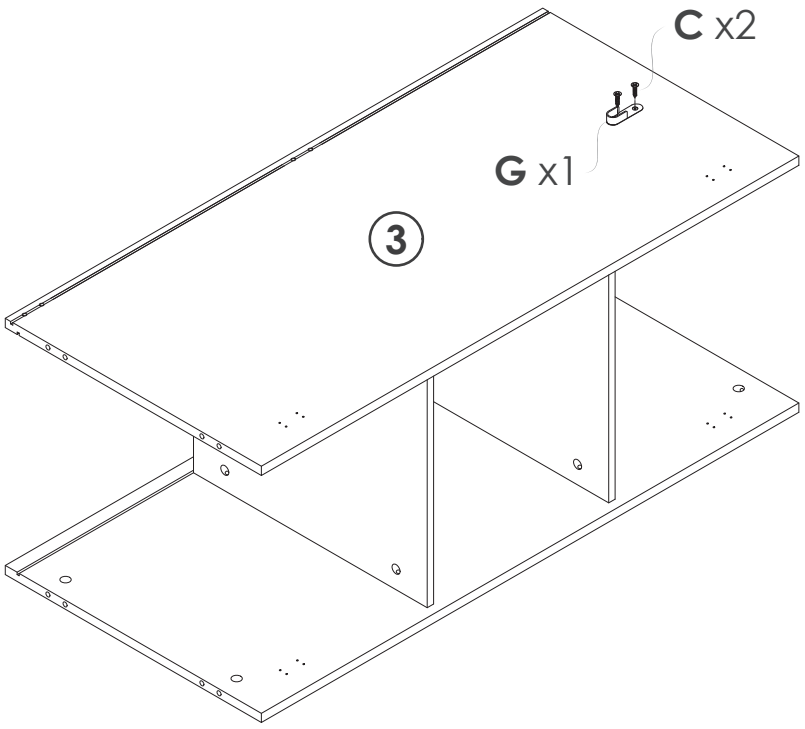

18

F x4pcs



M8*40mm

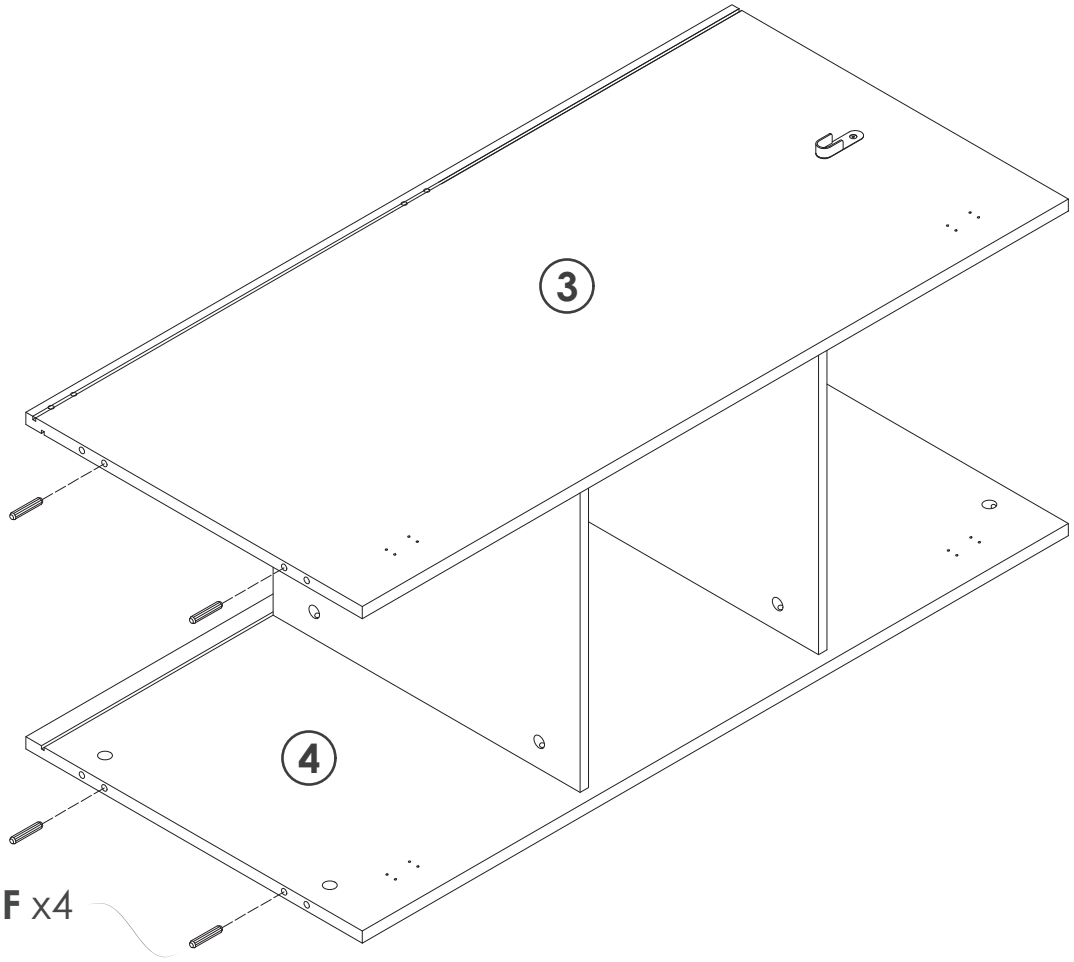

19

B x4pcs



M15*11mm

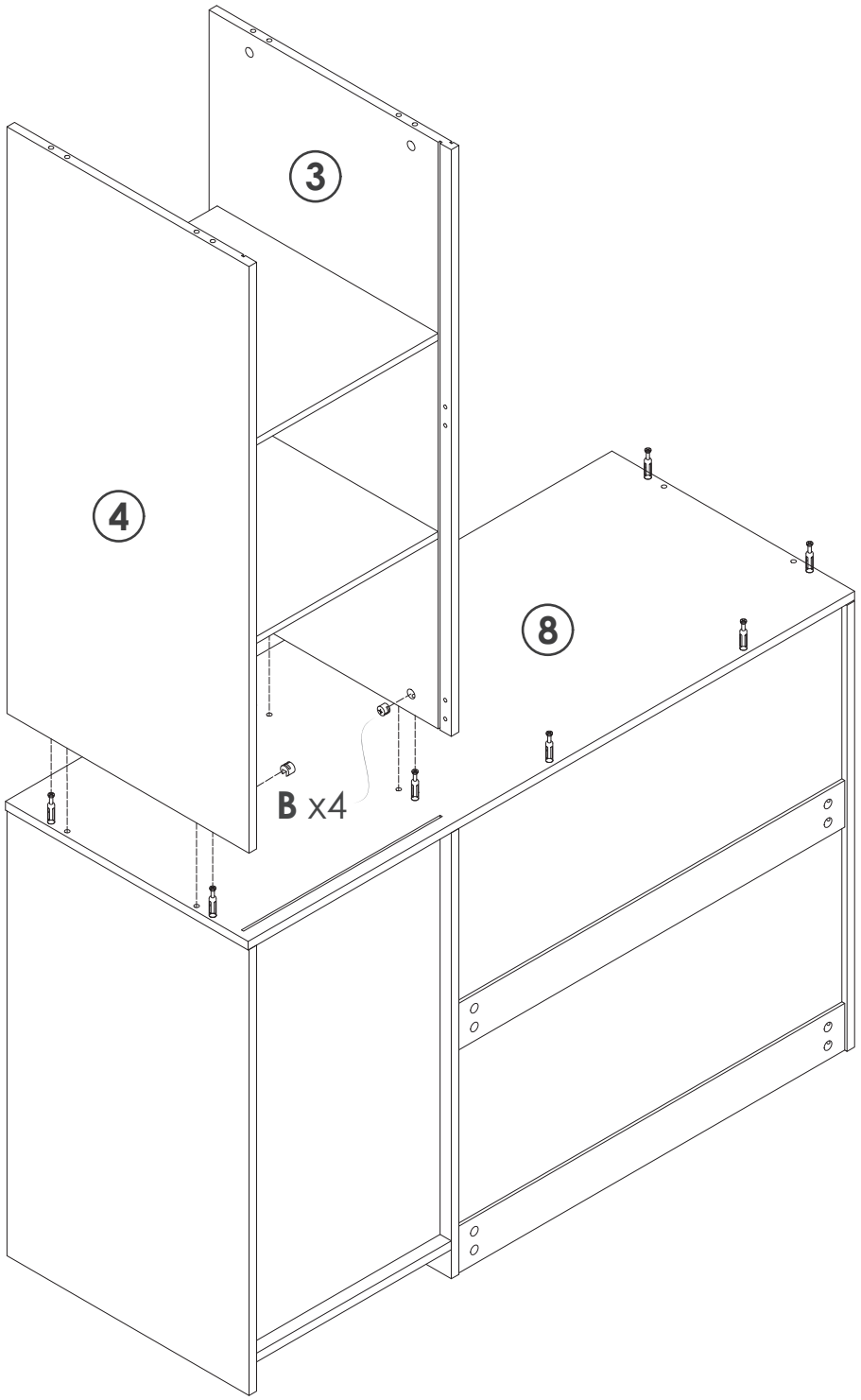

20

A x2pcs



M6*40mm

C x2pcs



M3.5*14mm

F x2pcs



M8*40mm

G x1pc



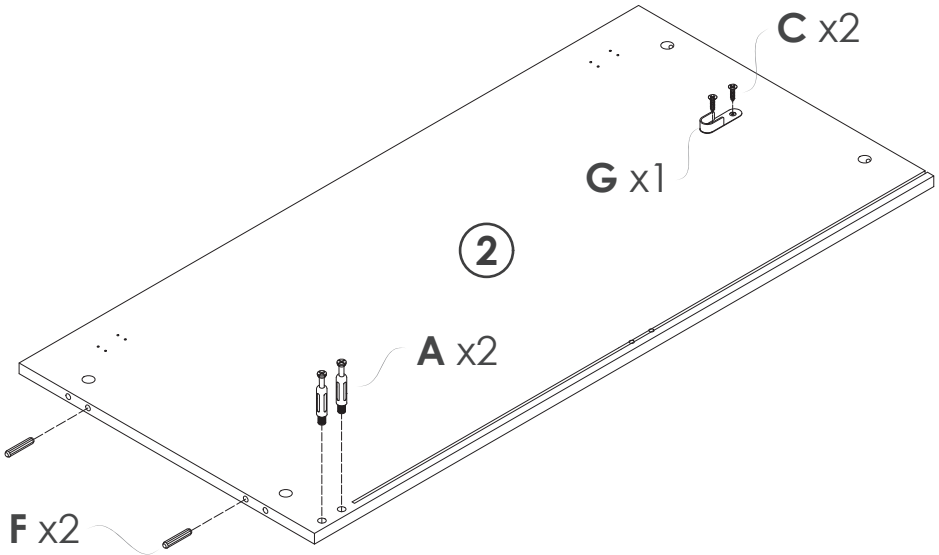

21

B x2pcs



M15*11mm

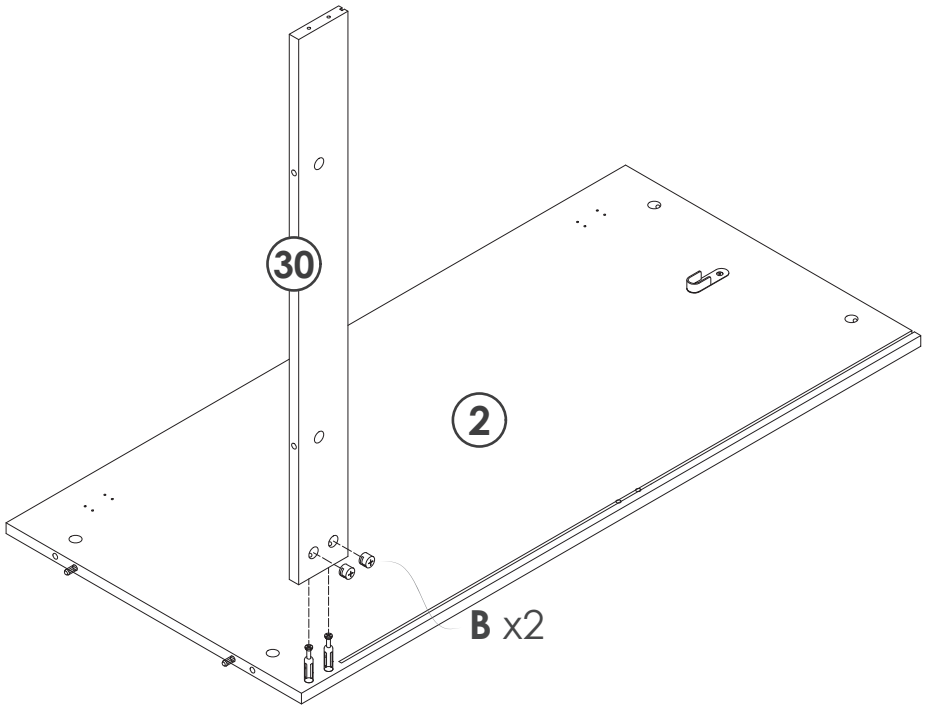

22

B x4pcs



M15*11mm

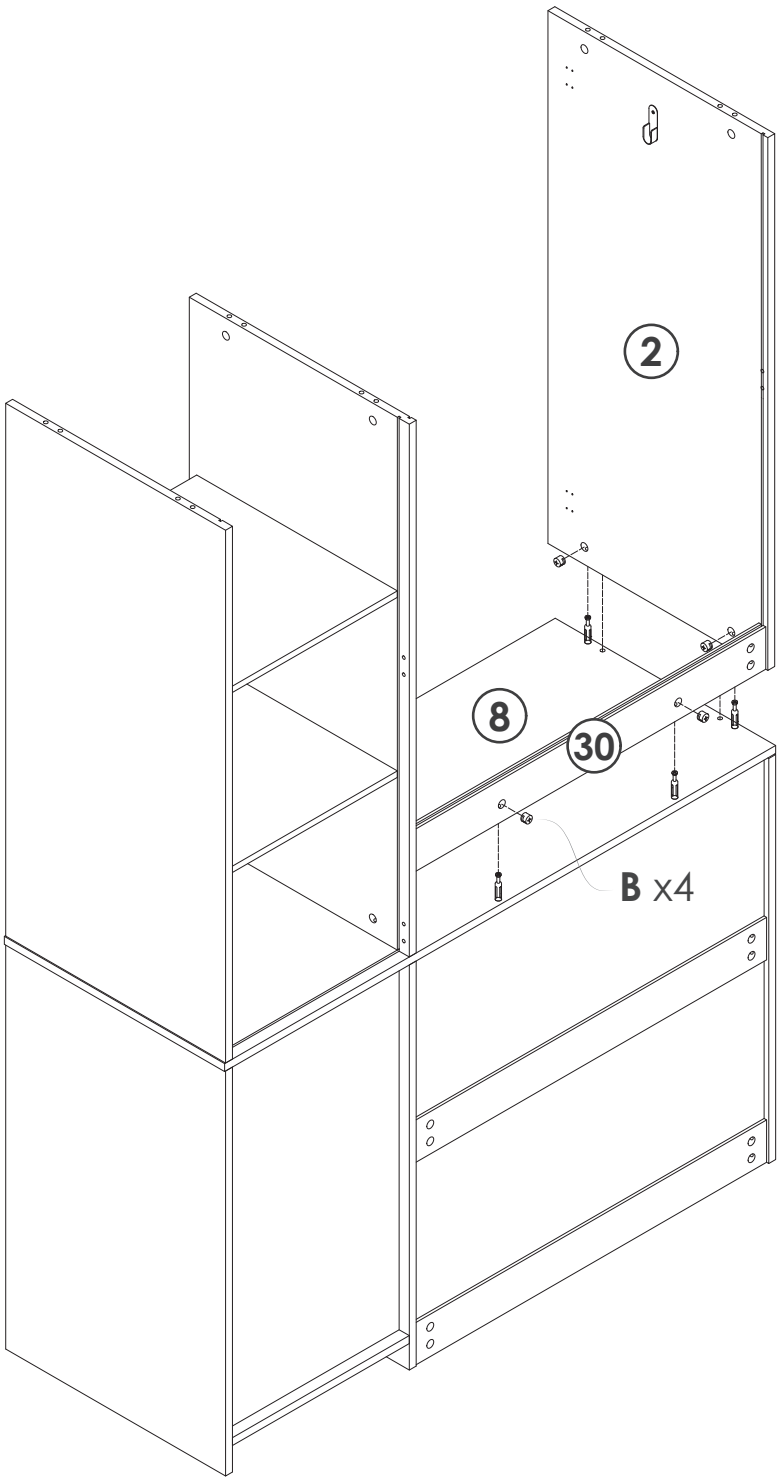

23

D x2pcs



M5*40mm

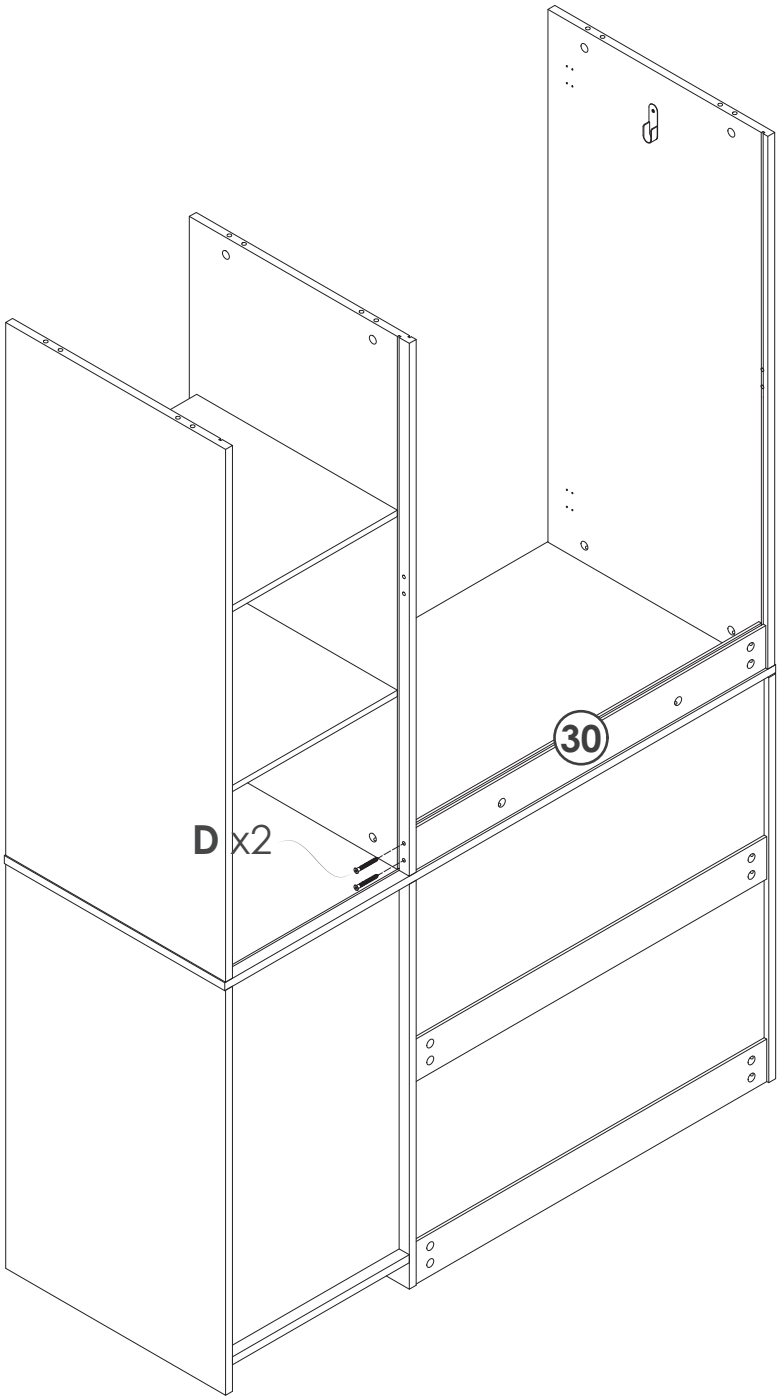

24

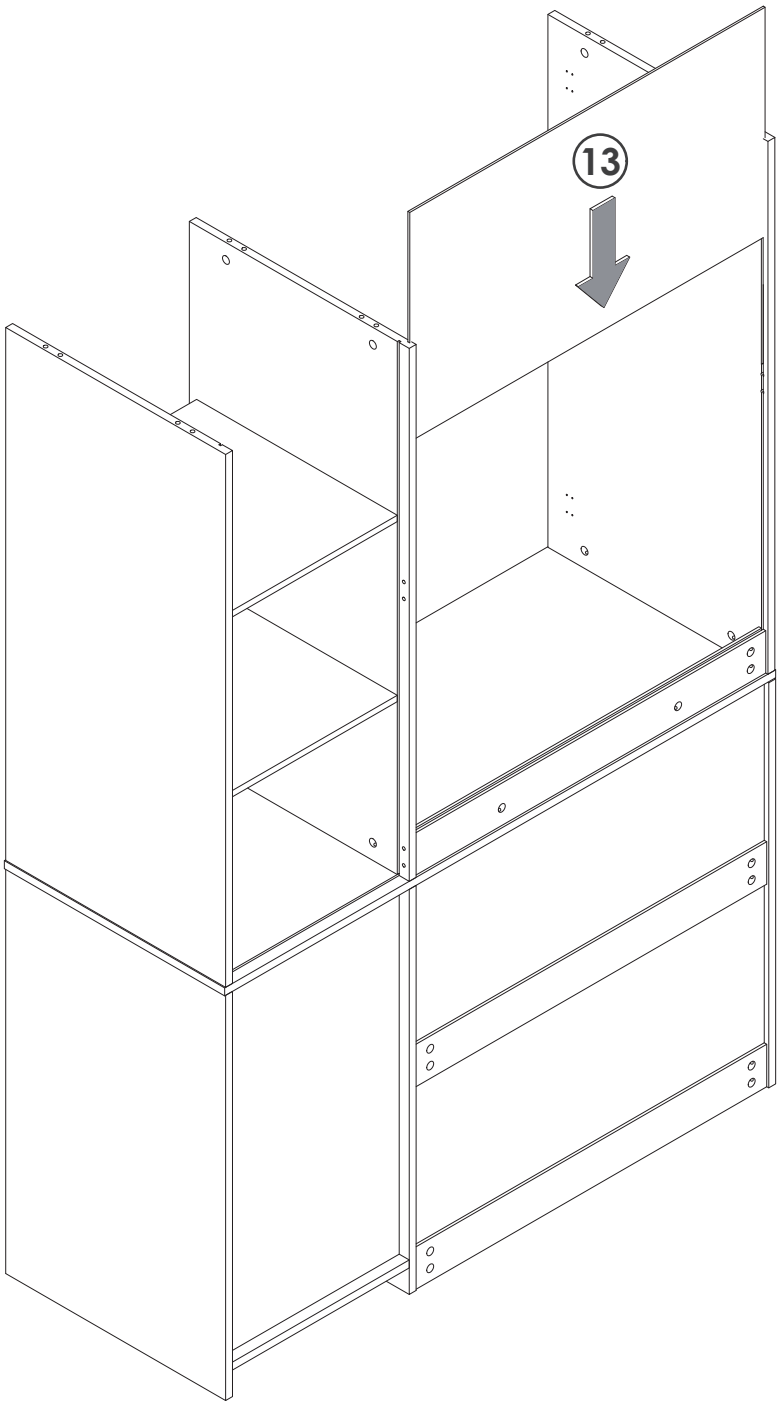

25

D x4pcs



M5*40mm

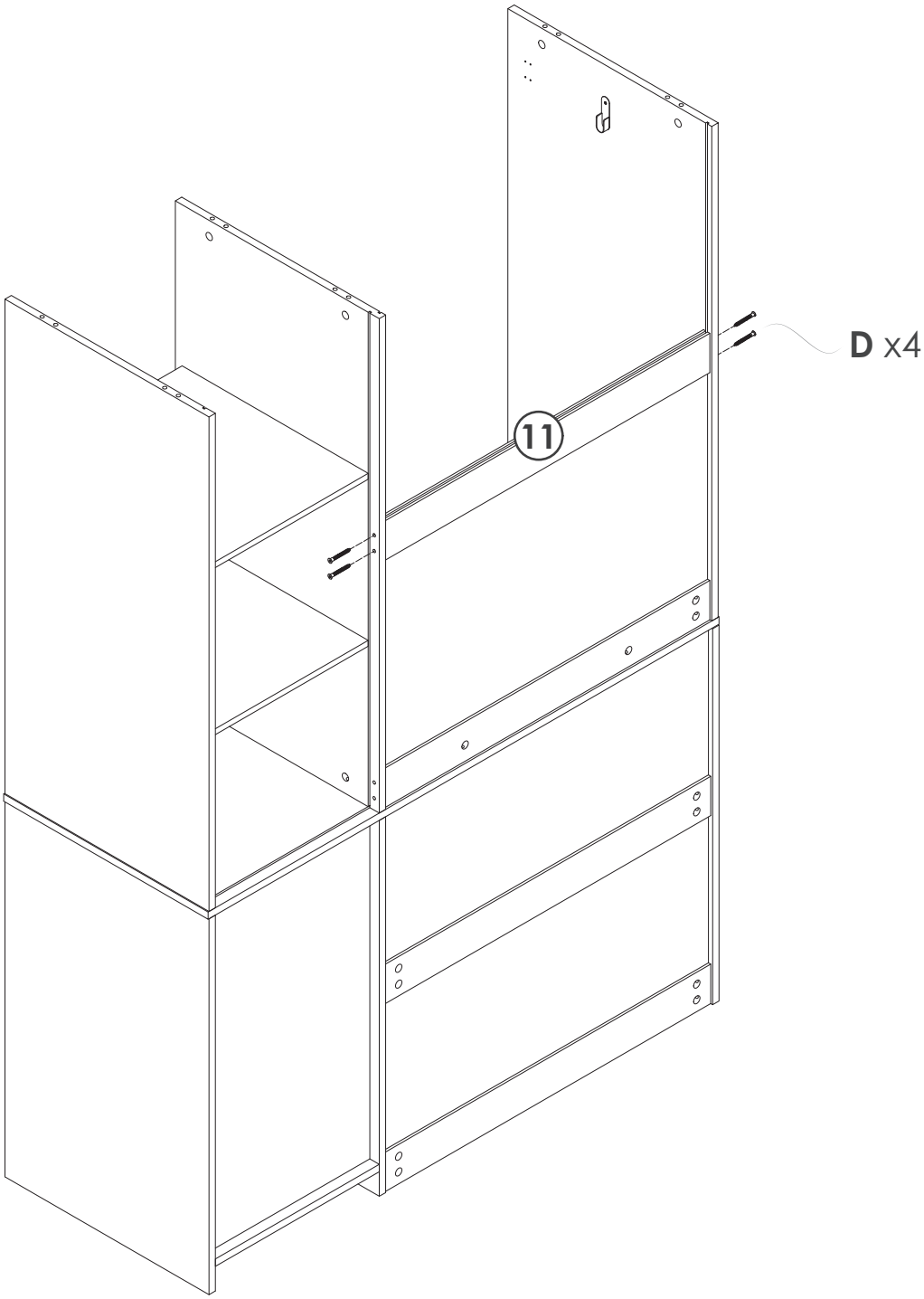

26

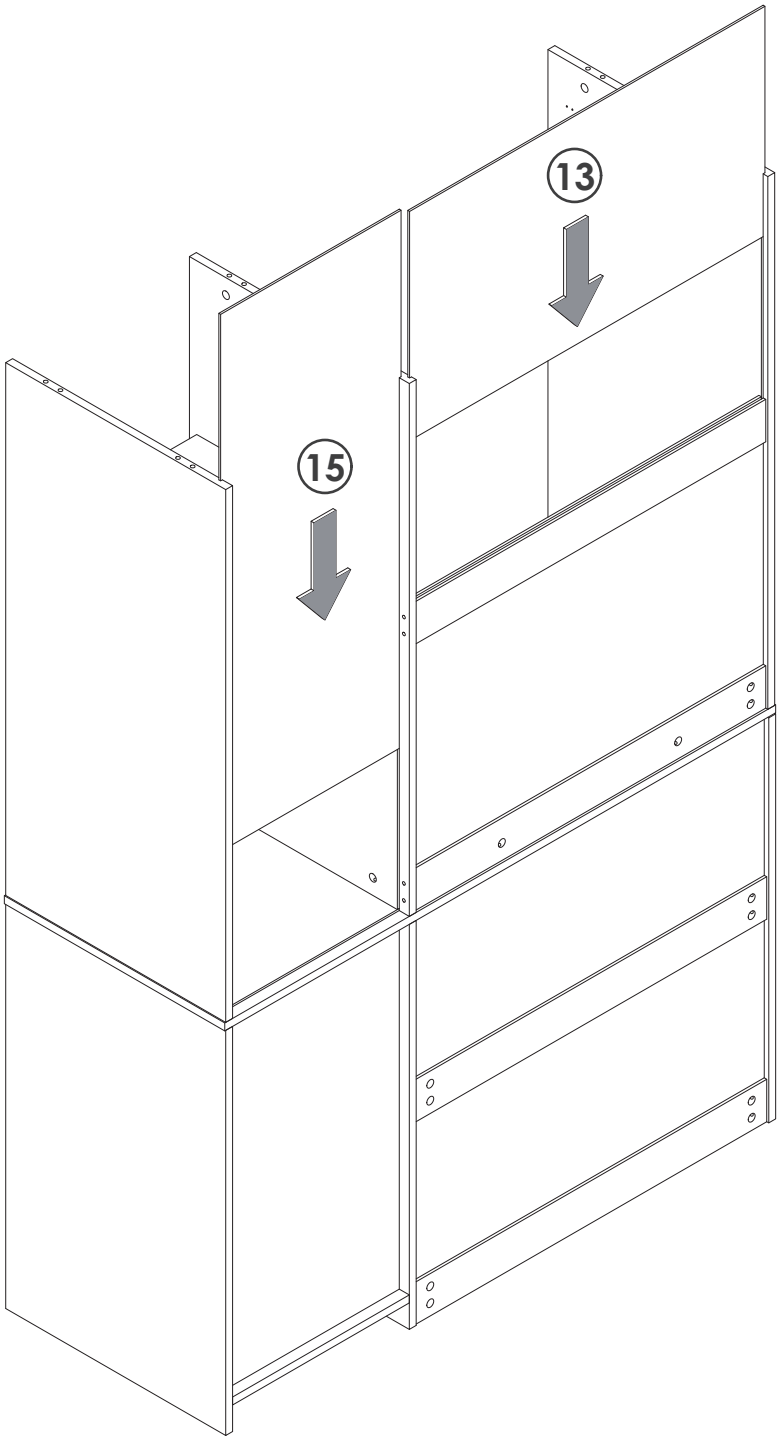

27

F x6pcs



M8*40mm

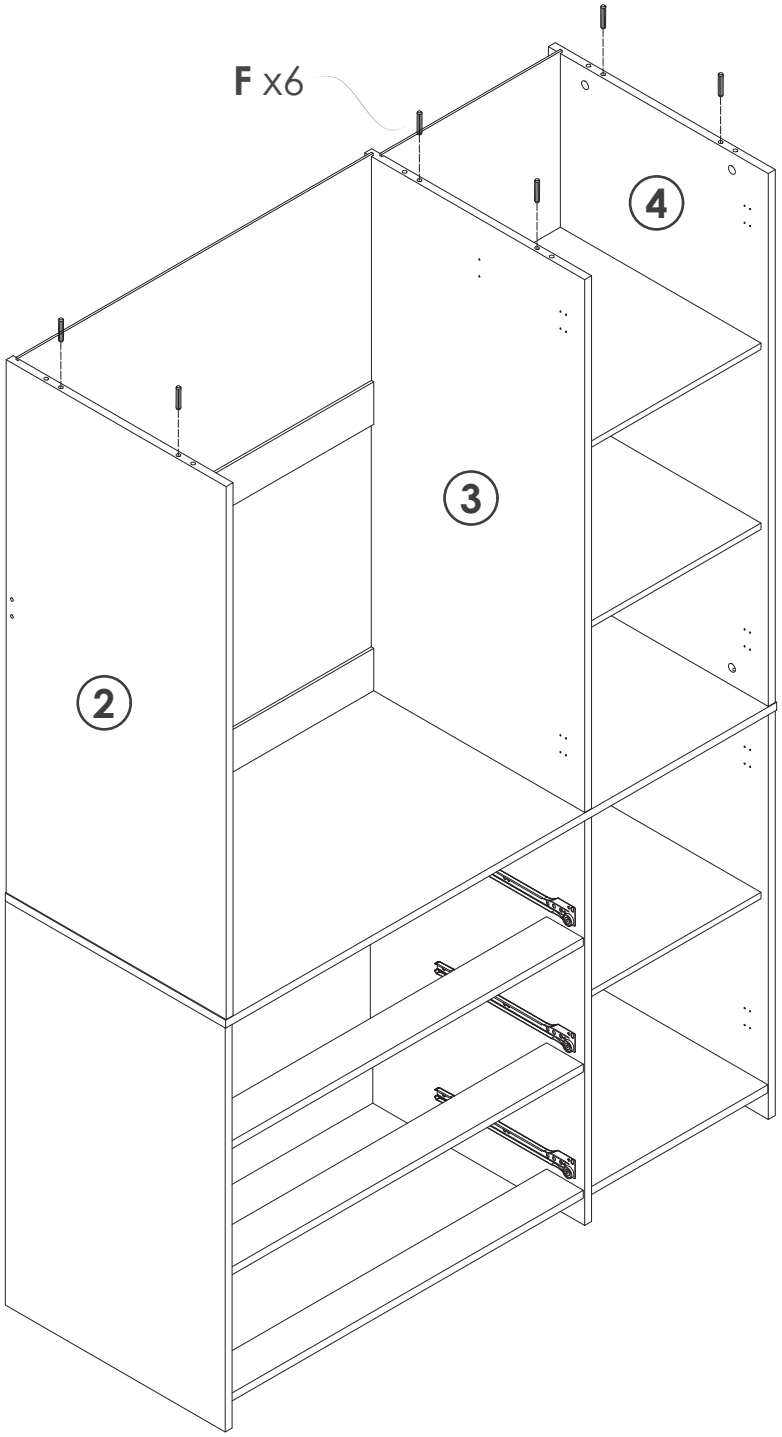

28

A x6pcs



M6*40mm

C x2pcs



M3.5*14mm

H x1pcs

H1



H2



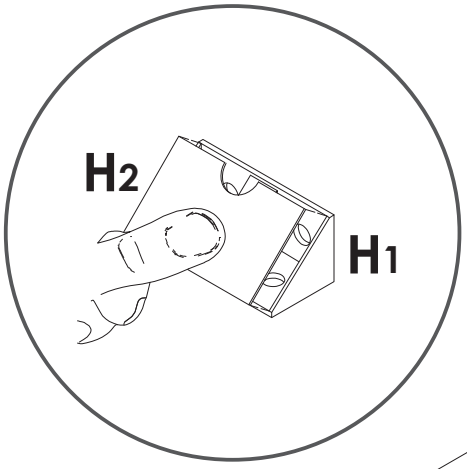

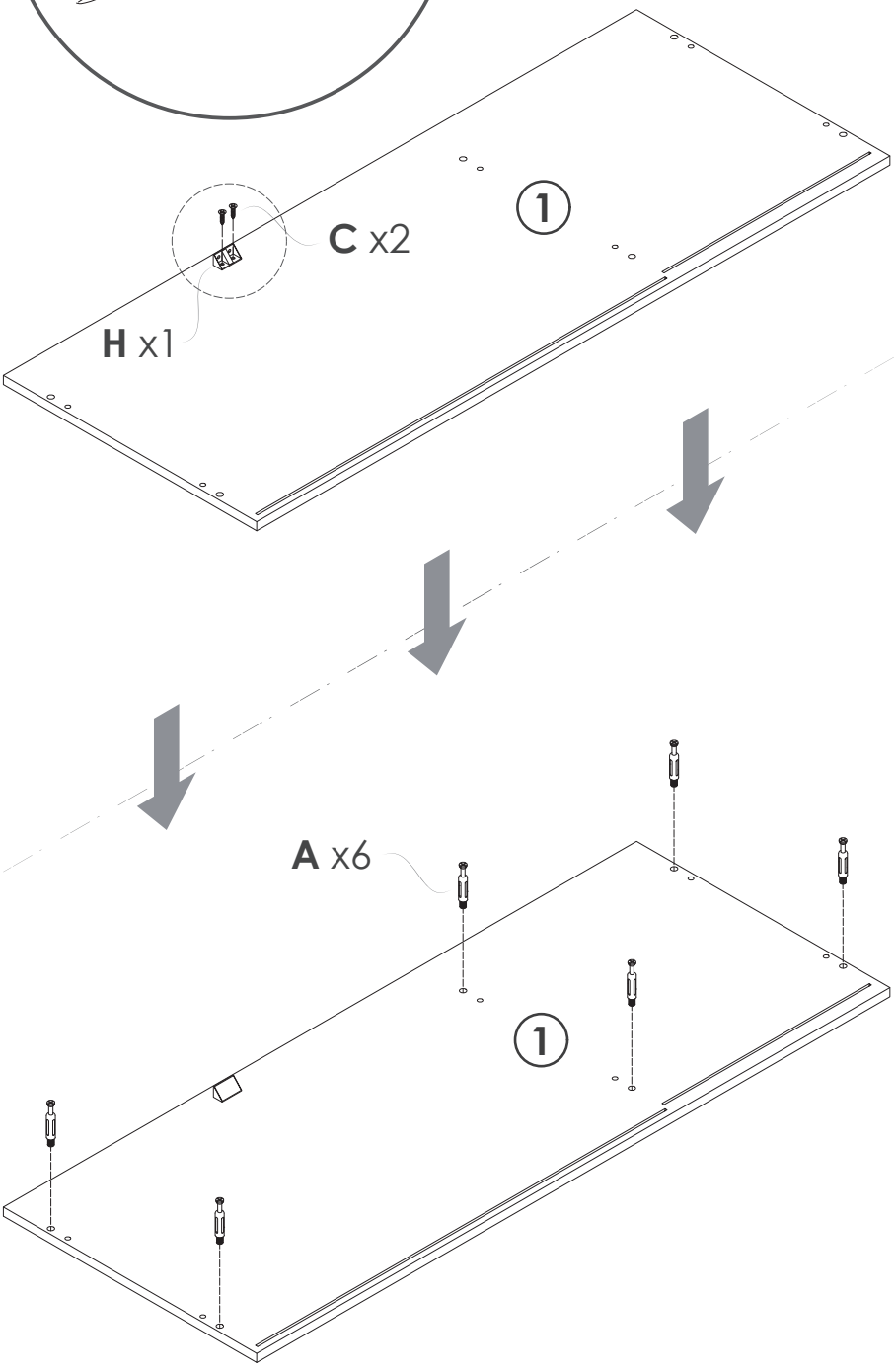

29

B x6pcs



M15*11mm

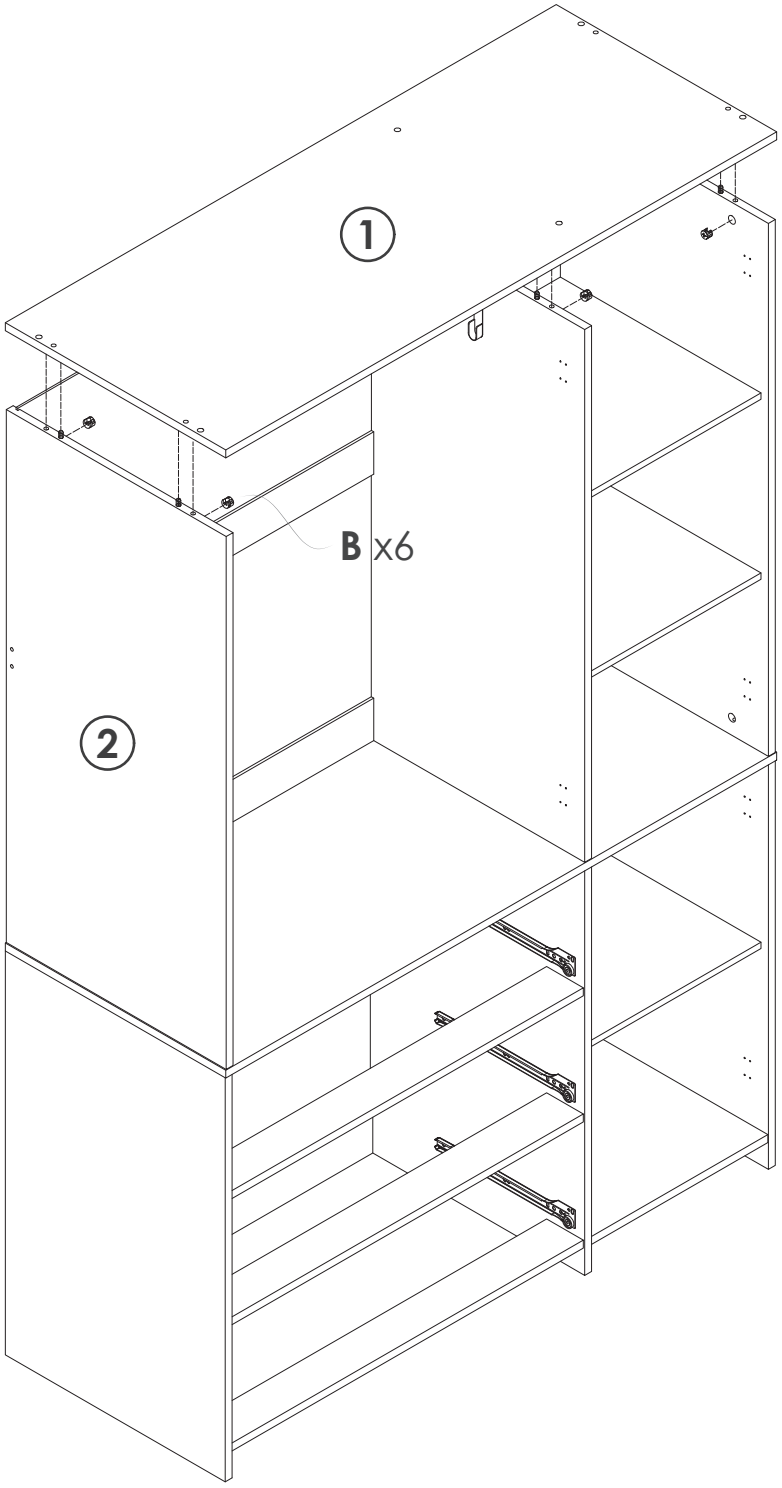

30

A x6pcs



M6*40mm

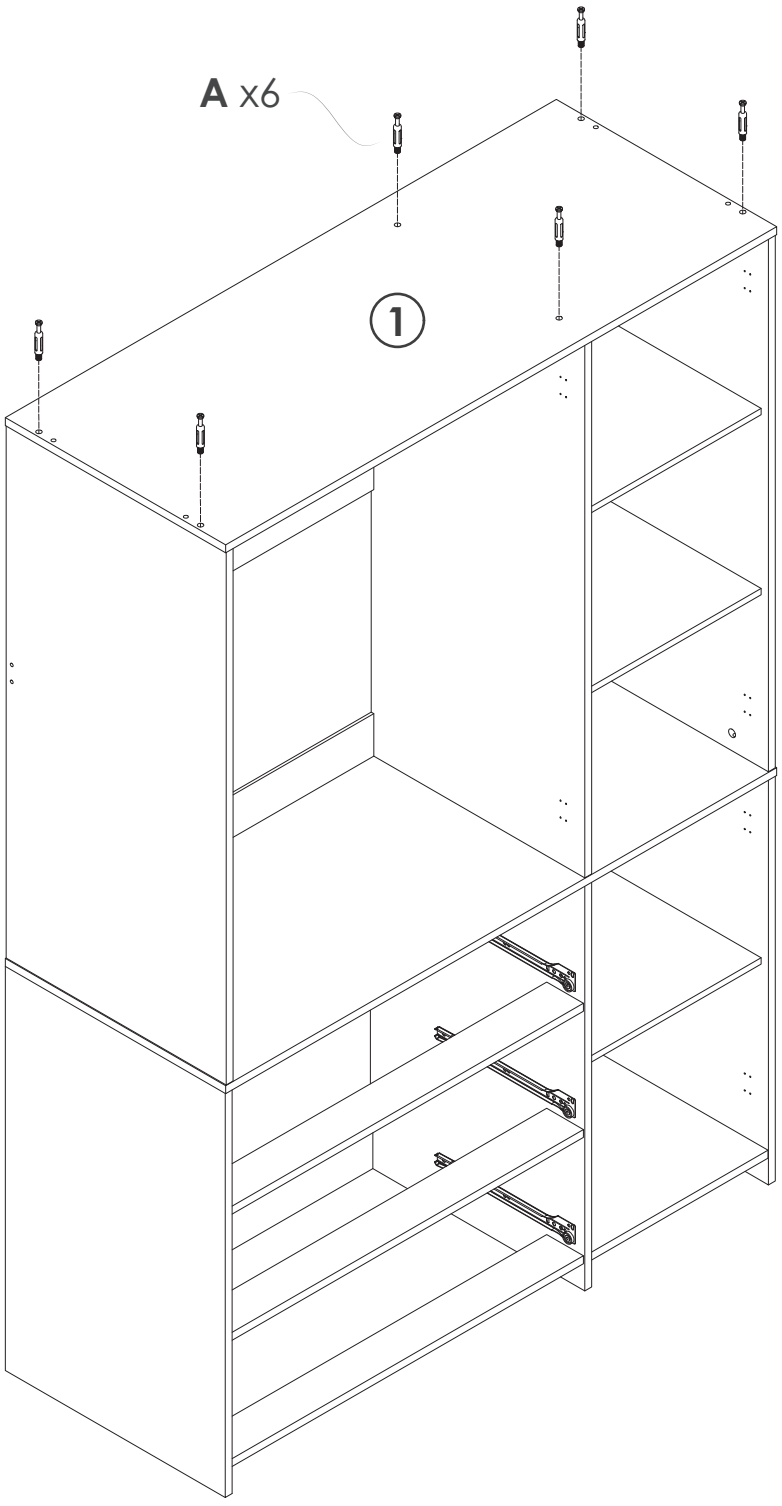

31

B x4pcs



M15*11mm

F x2pcs



M8*40mm

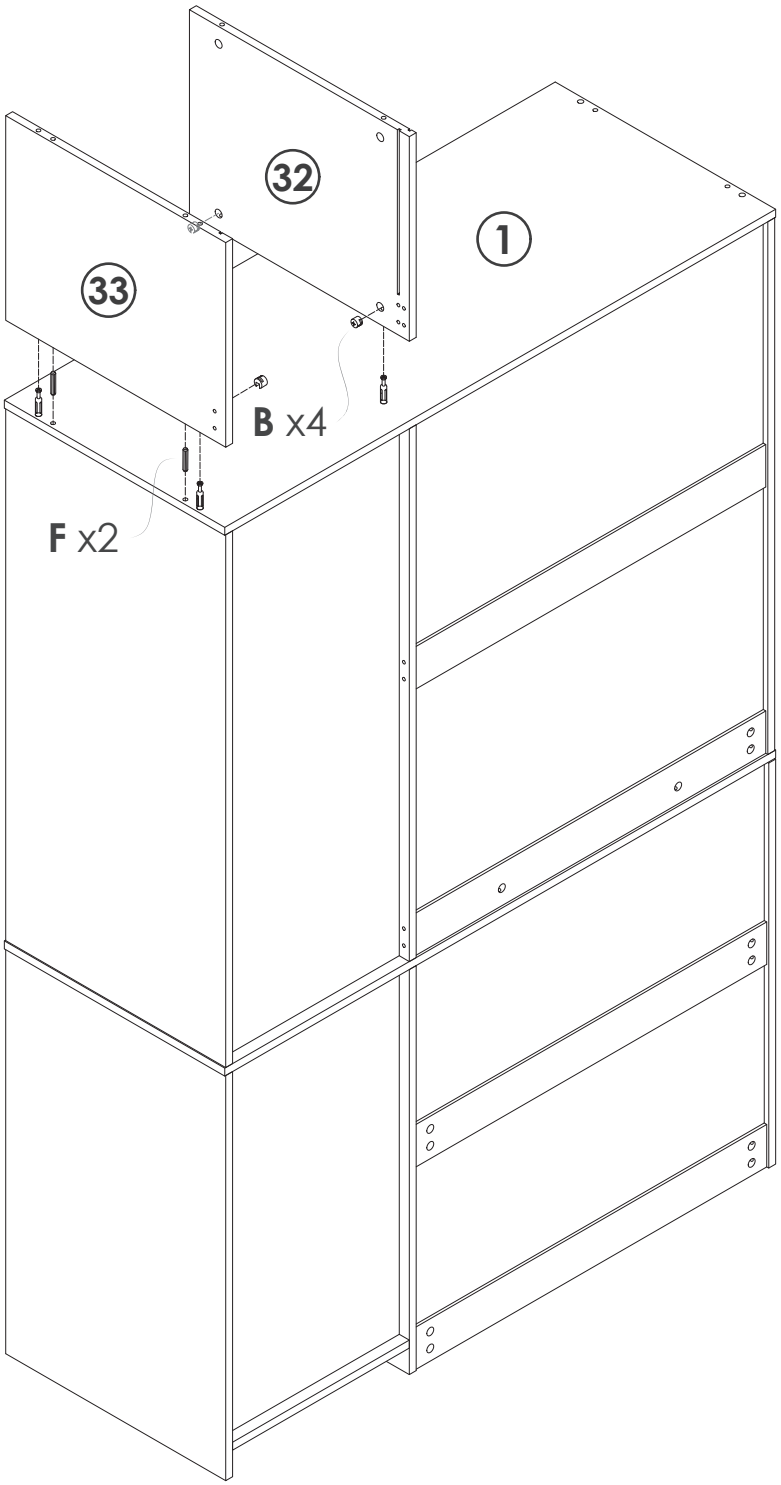

32

D x4pcs



M5*40mm

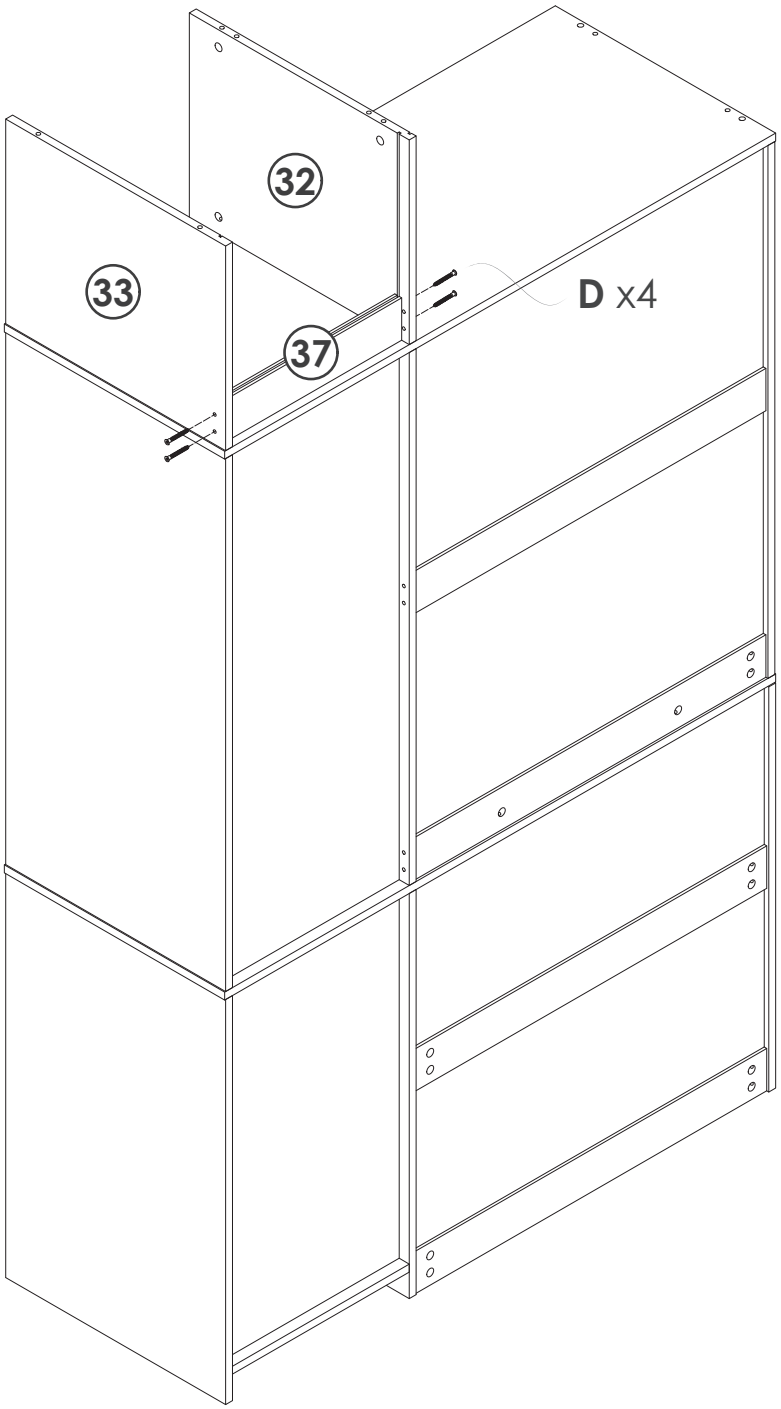

33

B x2pcs



M15*11mm

F x2pcs



M8*40mm

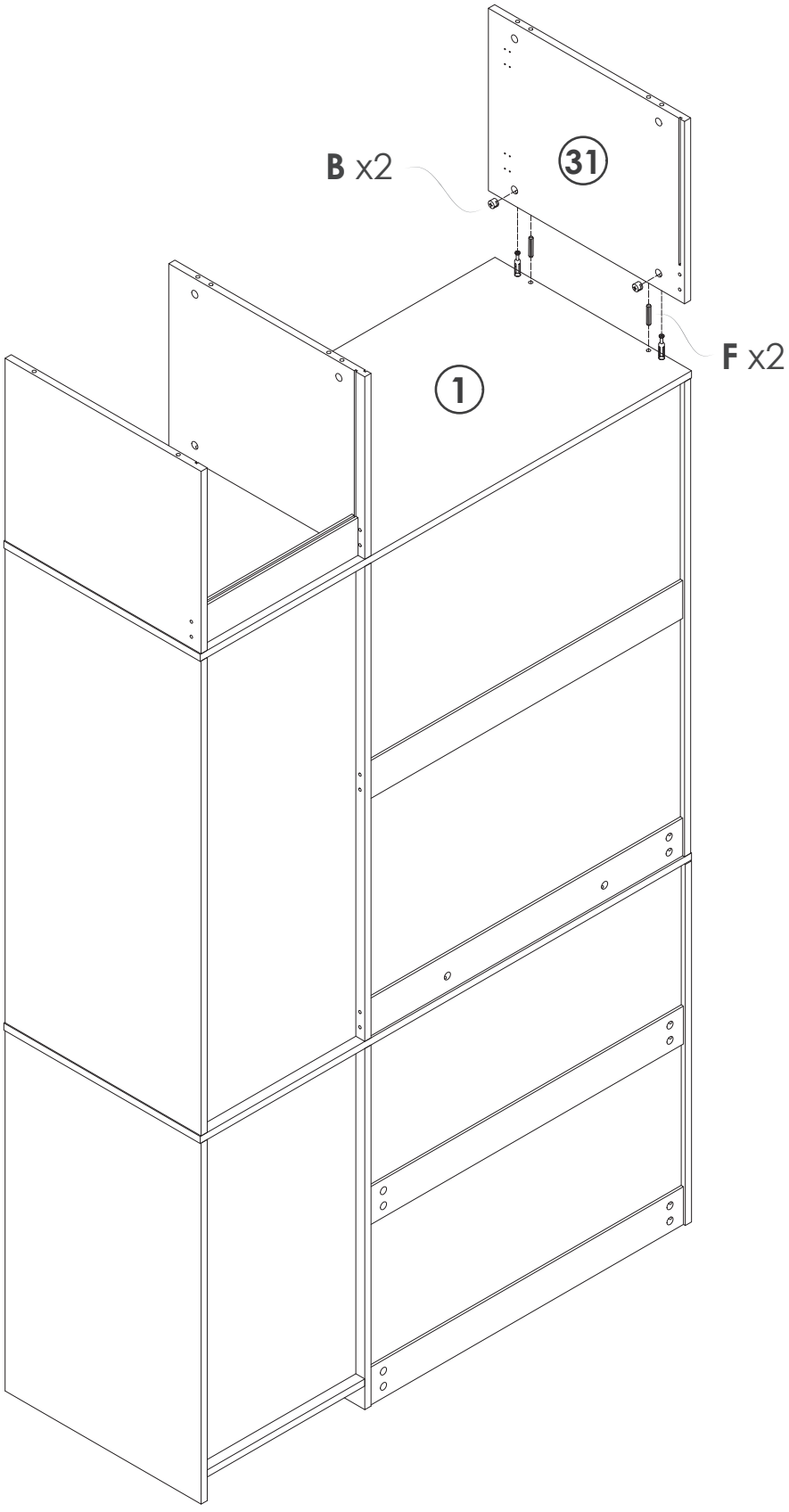

34

D x4pcs



M5*40mm

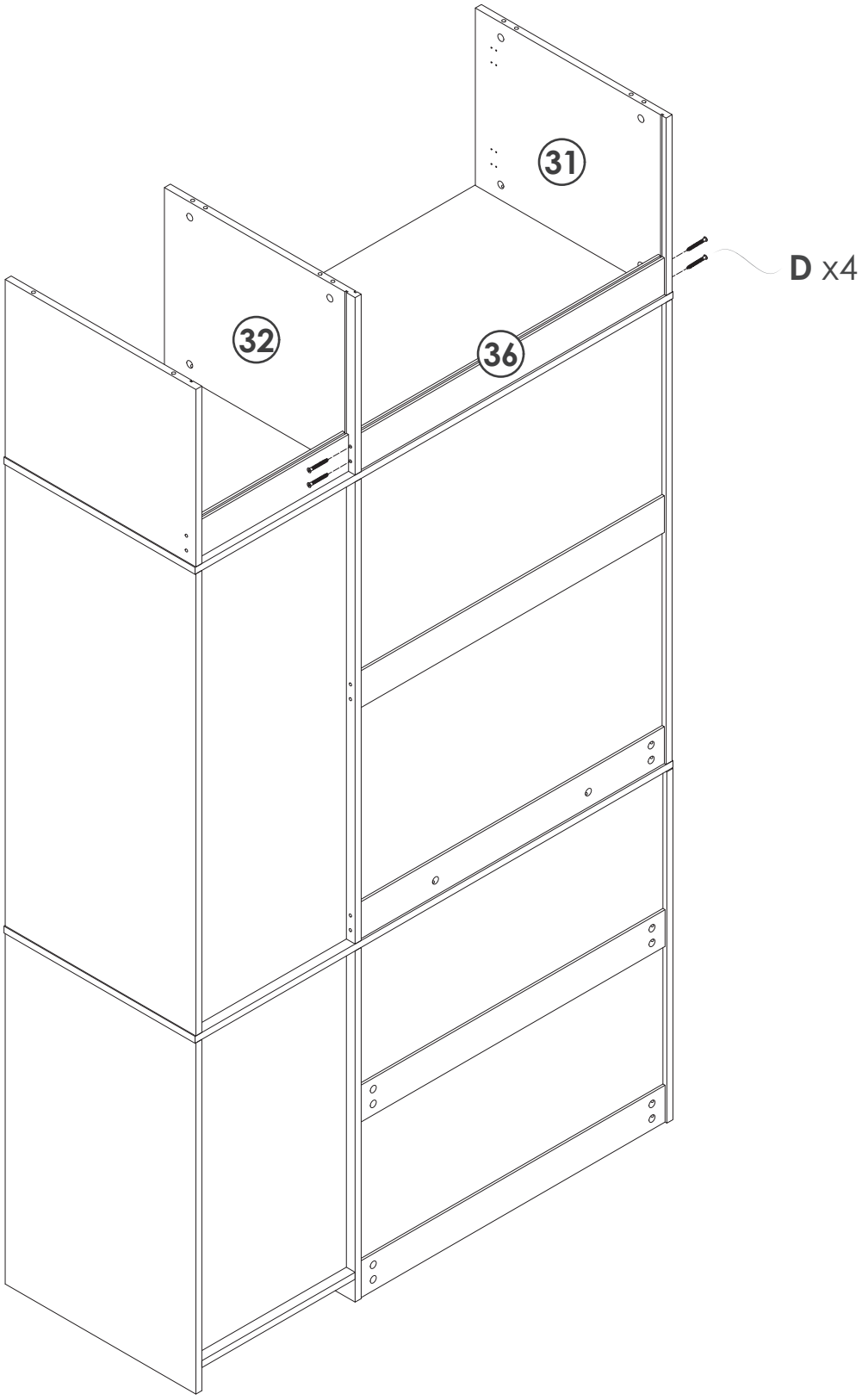

35

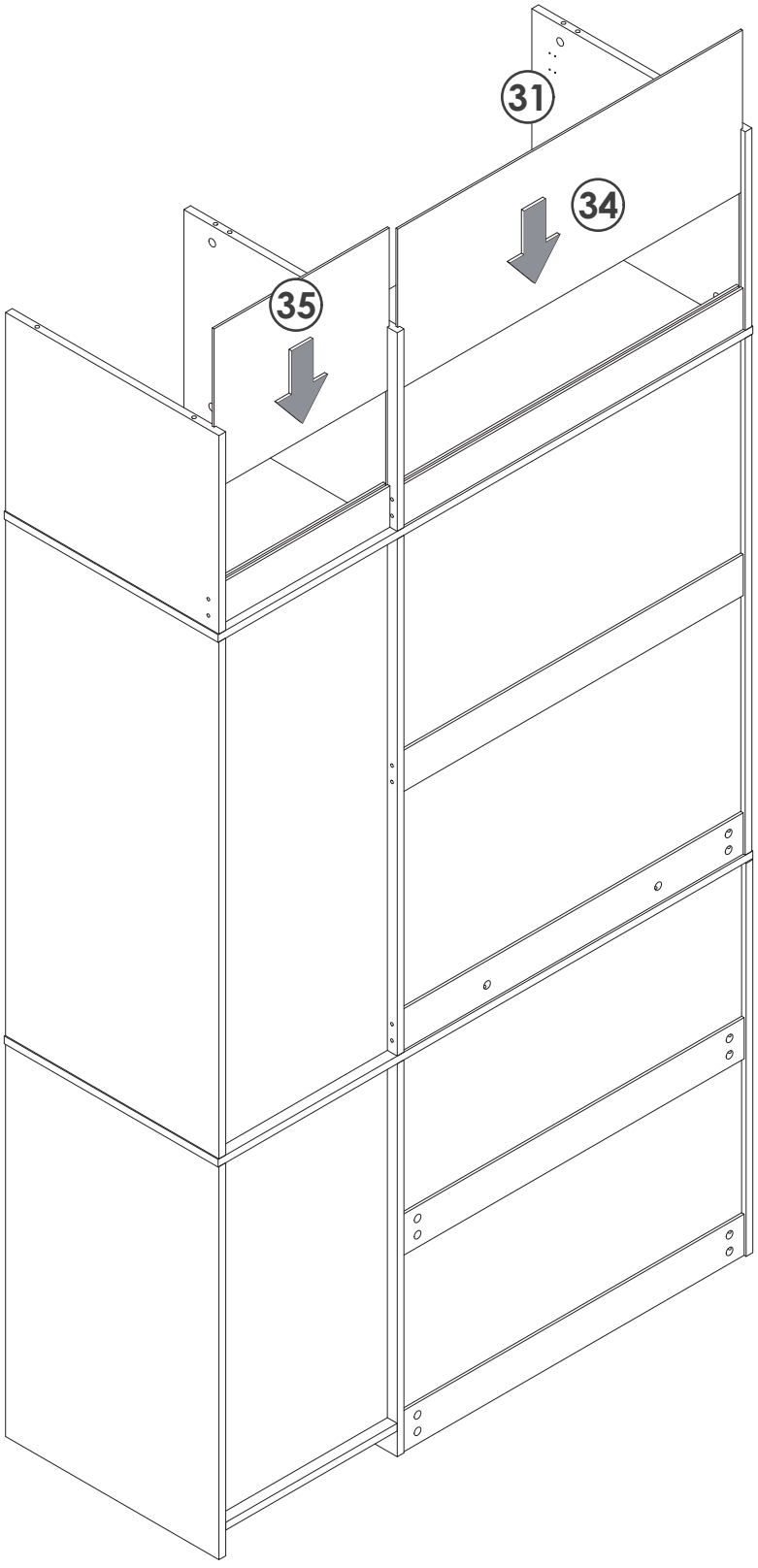

36

F x4pcs



M8*40mm

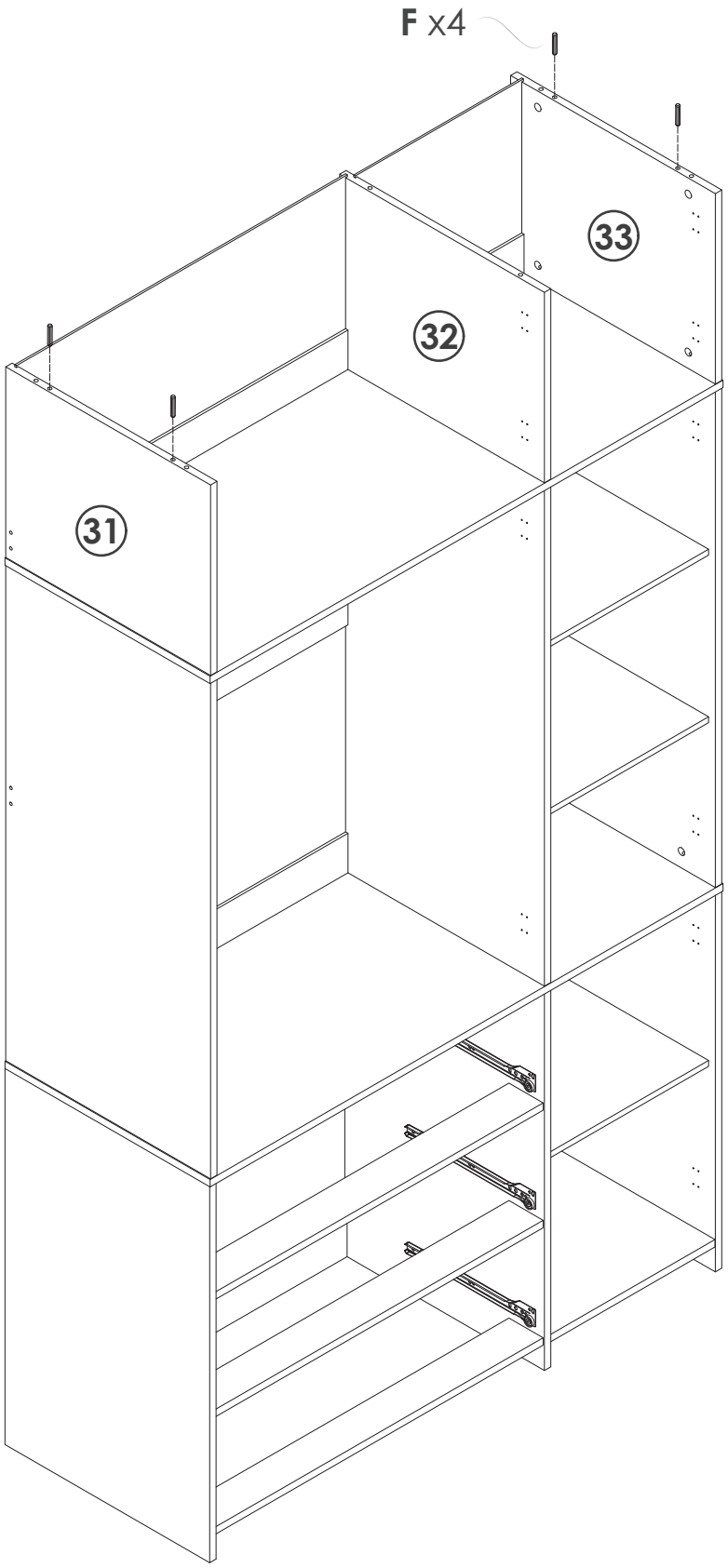

37

A x6pcs



M6*40mm

C x4pcs

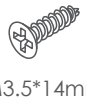

M3.5*14mm

H x2pcs

H1



H2



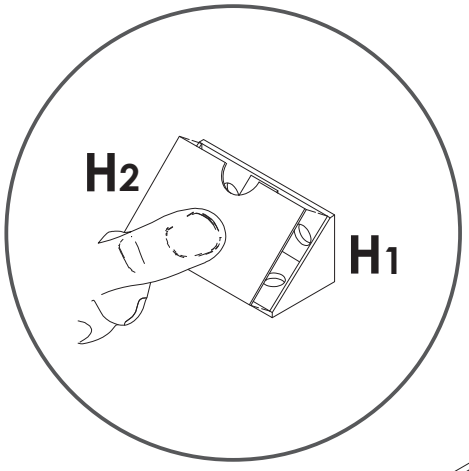

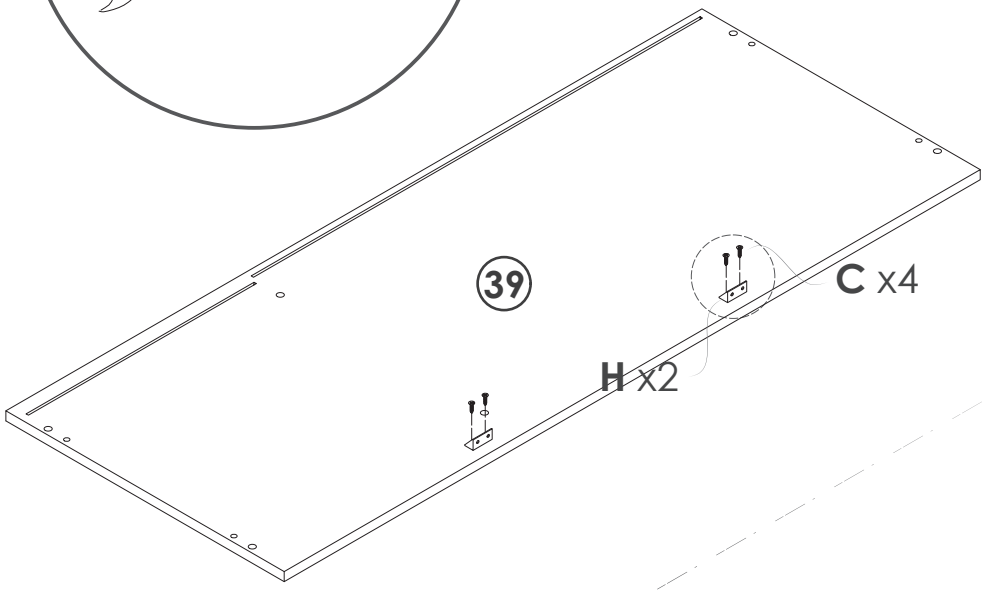

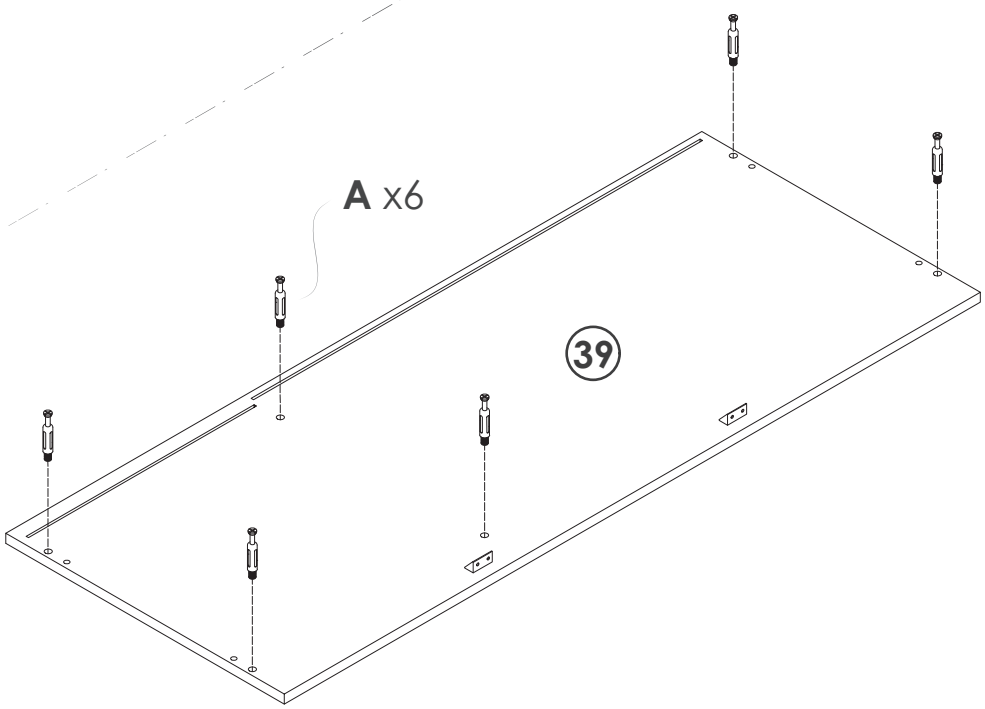

38

B x6pcs



M15*11mm

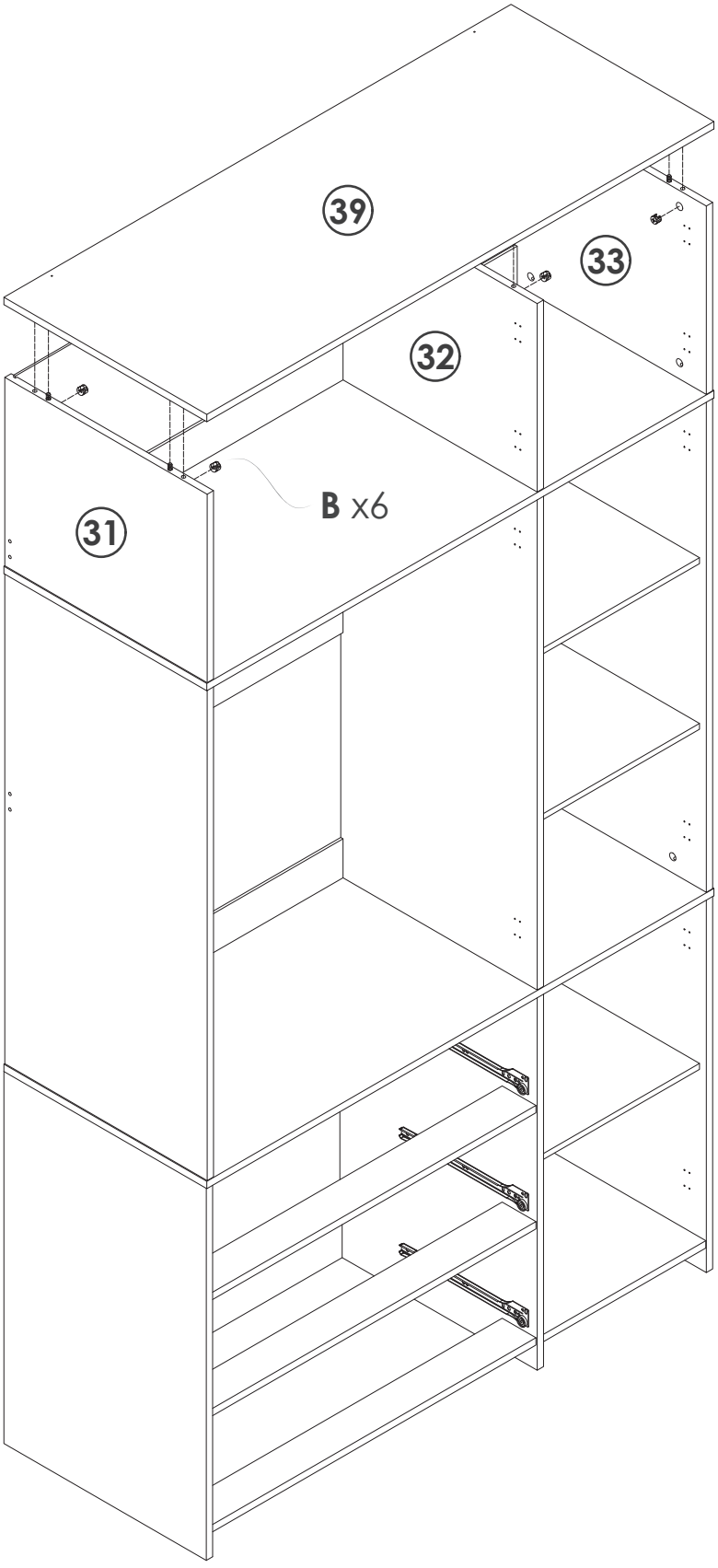

39

D x18pcs



M5*40mm

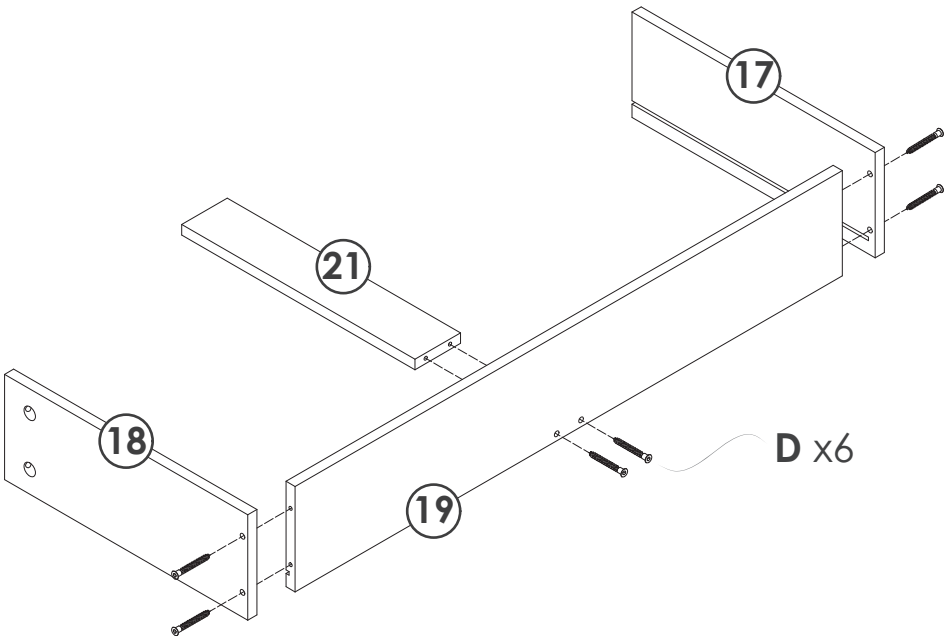

x3

40

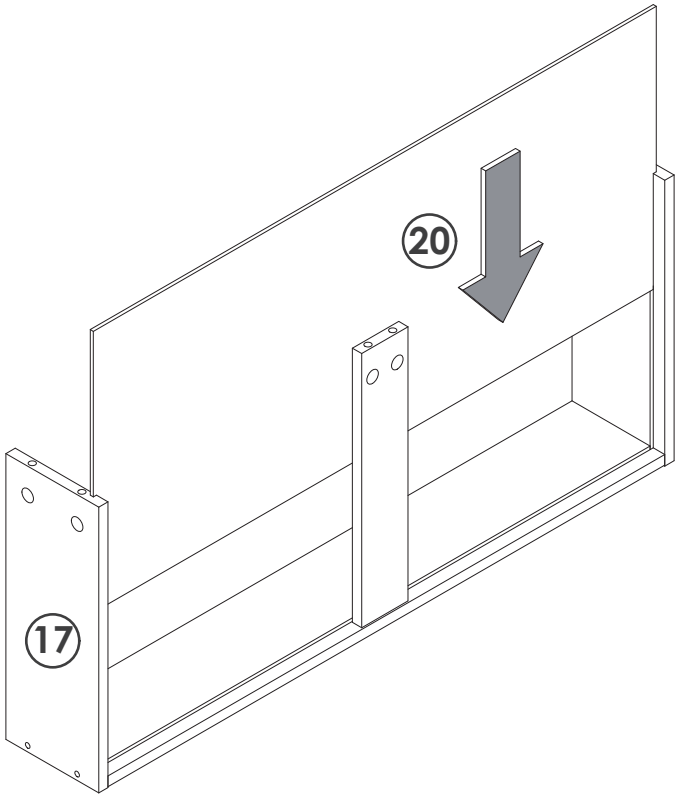

x3

41

A x18pcs

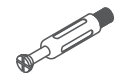

M6*40mm

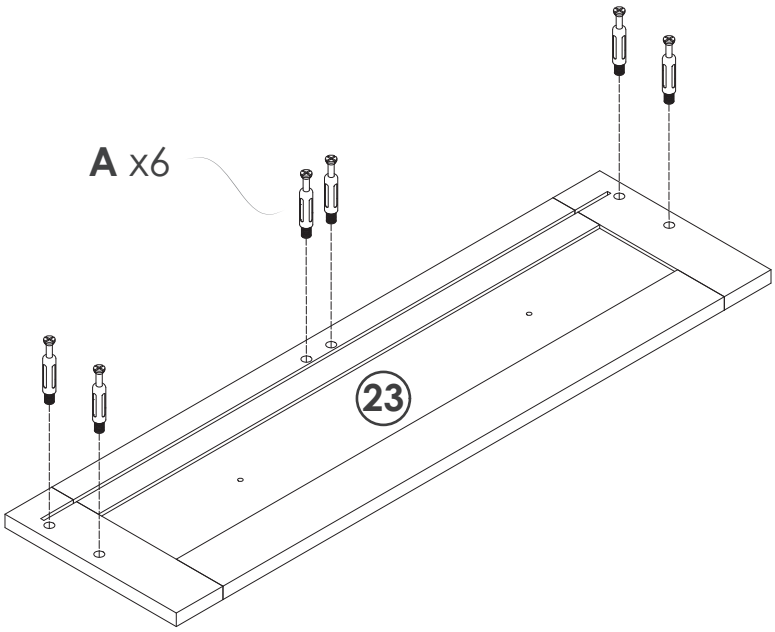

x3

42

B x18pcs



M15*11mm

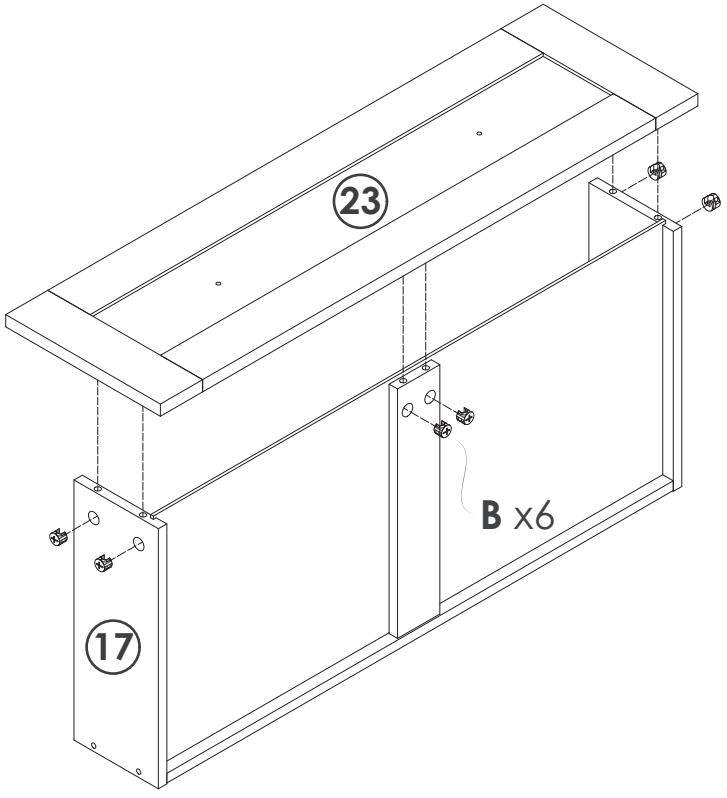

x3

43

J x6pcs



K x6pcs



M4*10mm

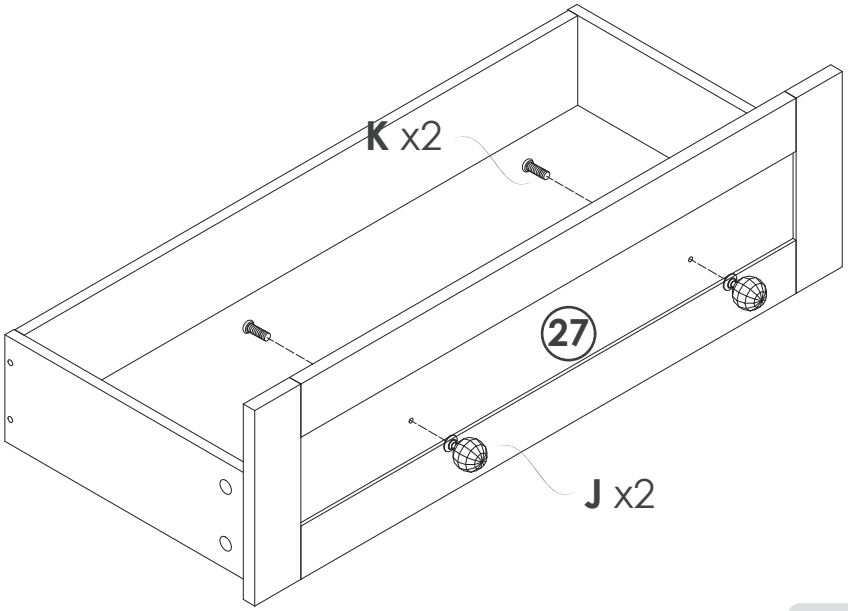

x3

44

L x3pcs

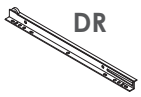



M x18pcs



M3*12mm

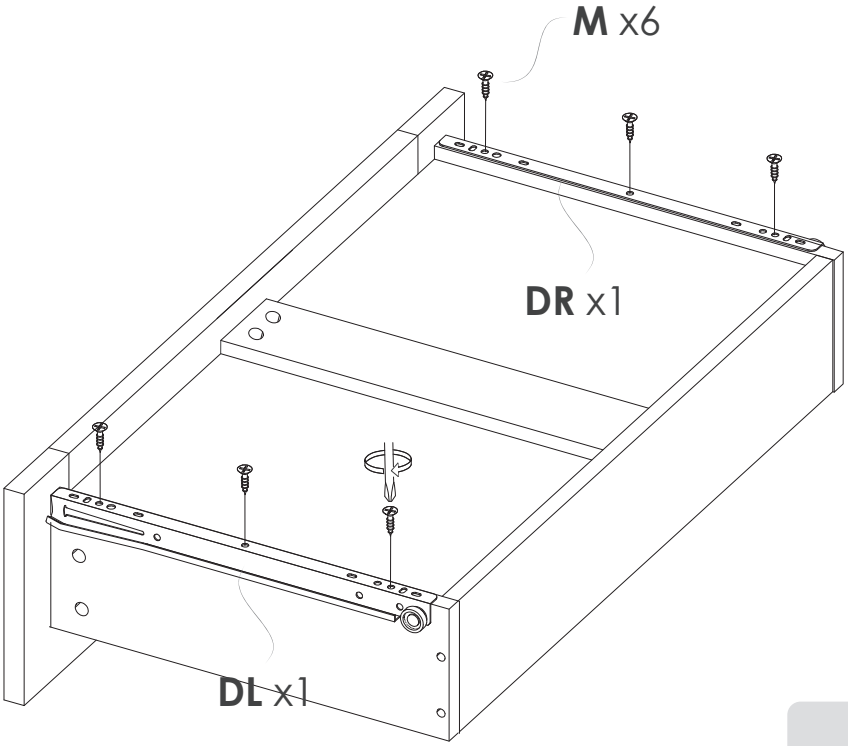

x3

45

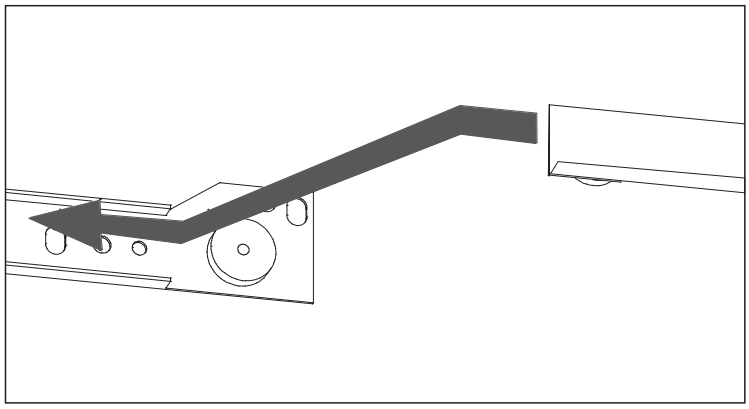

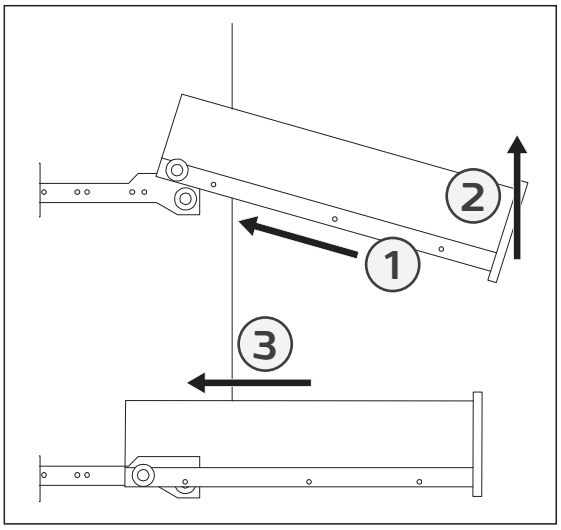

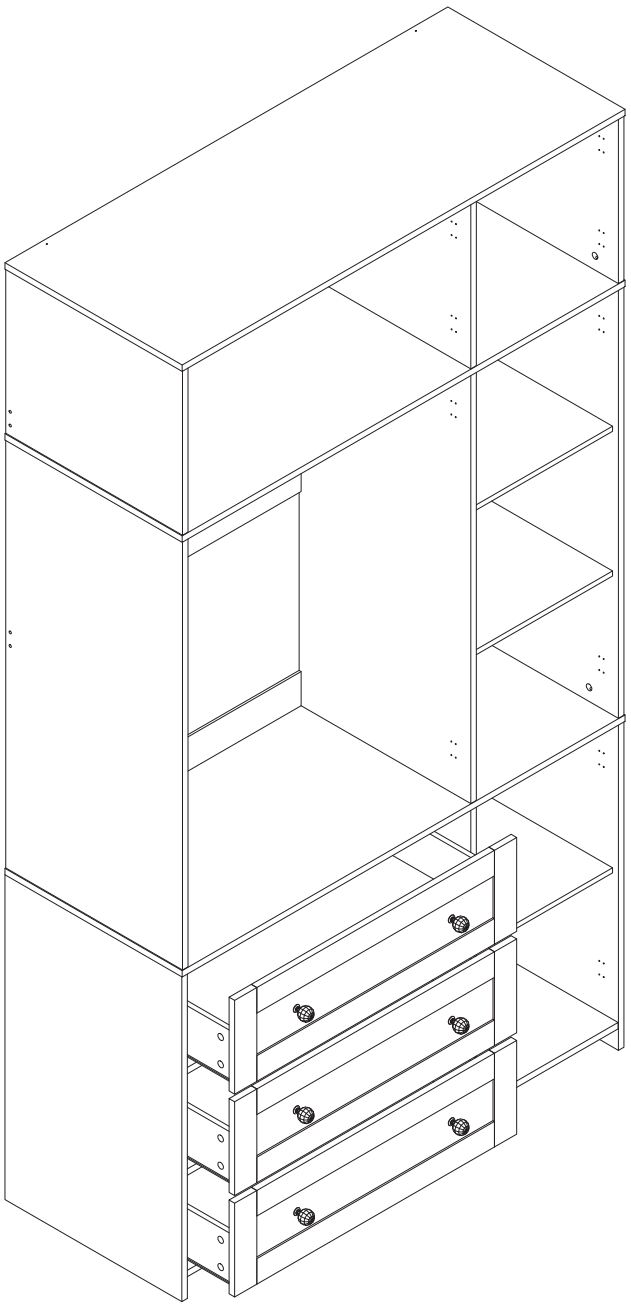

46

N x1pc

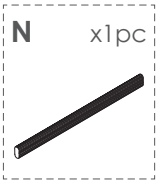

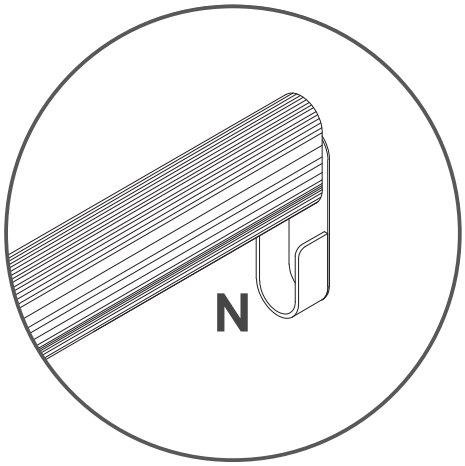

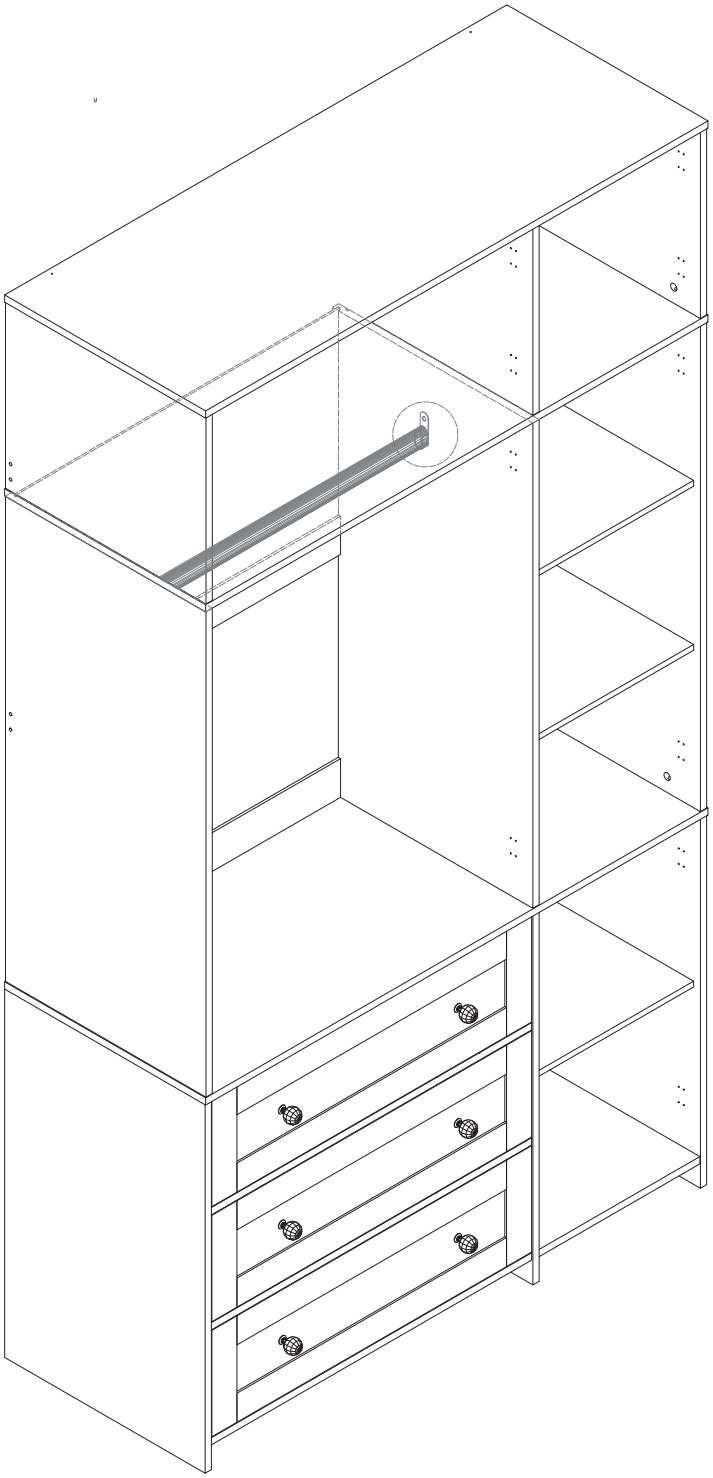

47

C x24pcs



M3.5*14mm

P x12pcs



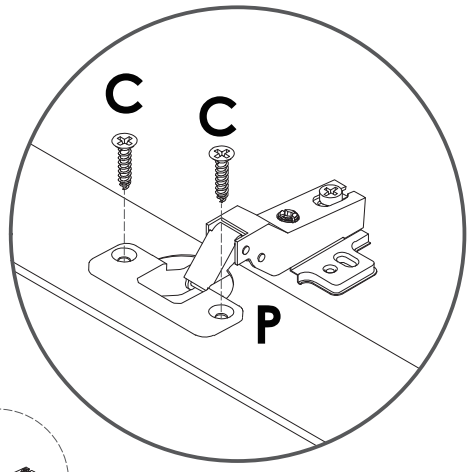

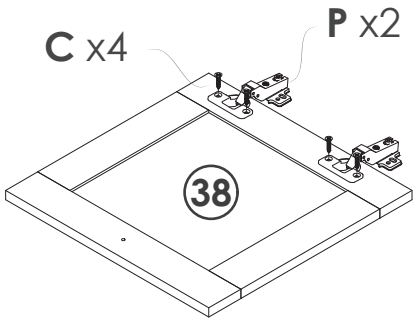

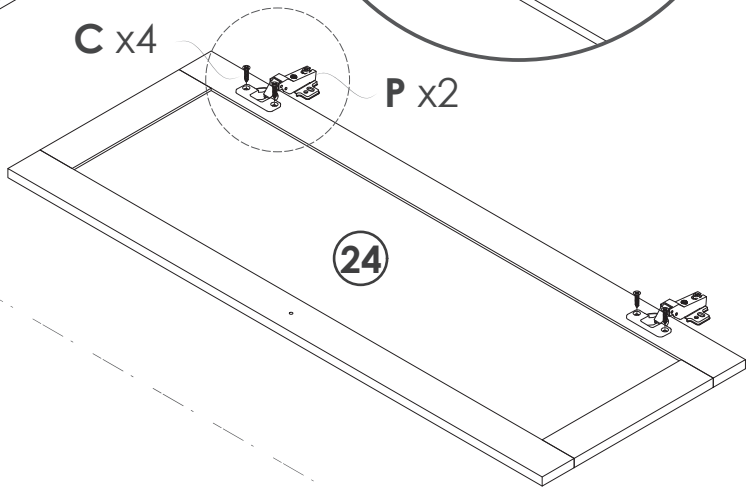

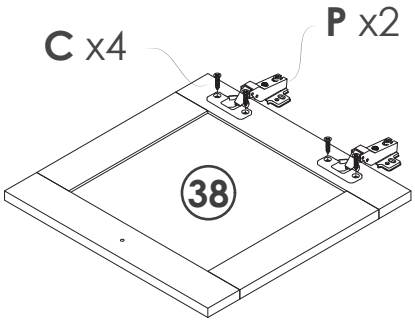

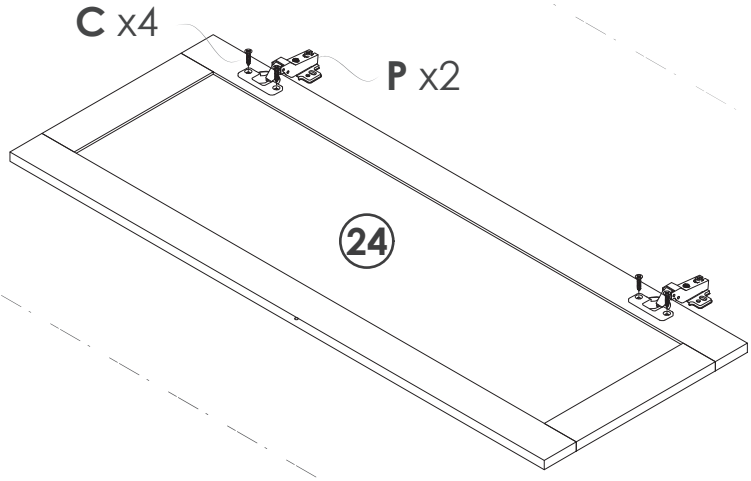

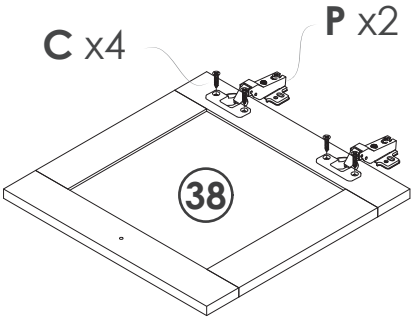

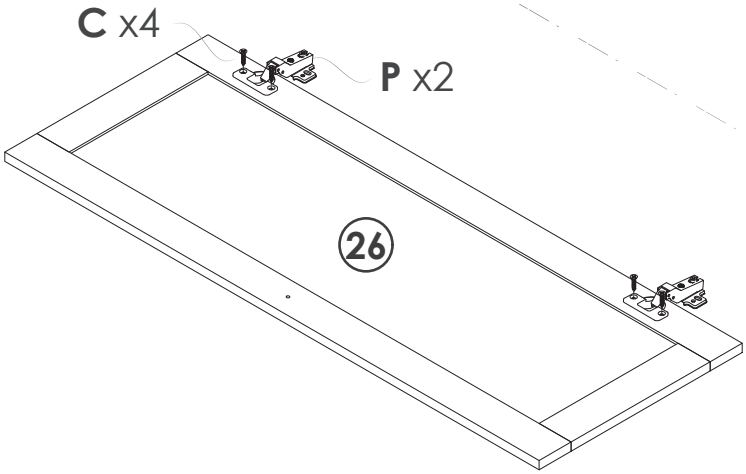

48

C x4pcs



M3.5*14mm

P x2pcs



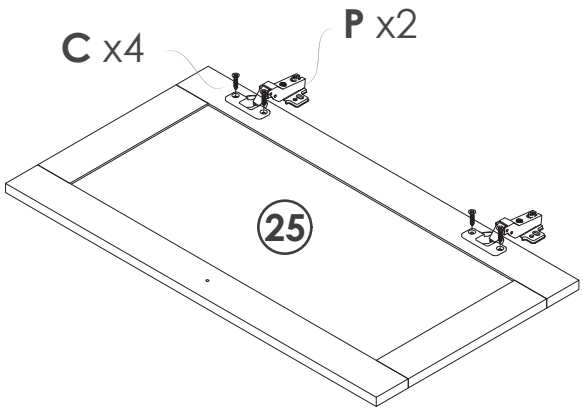

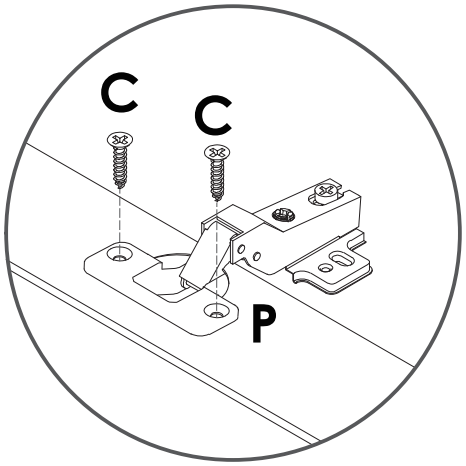

49

C x56pcs

M3.5*14mm

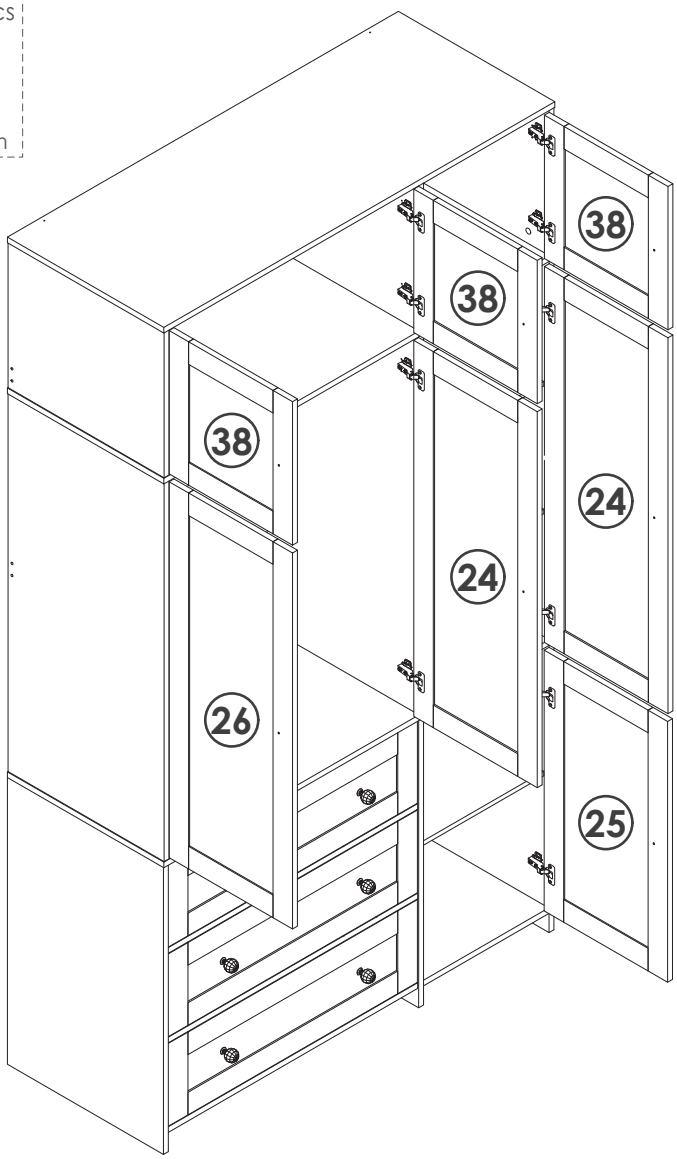

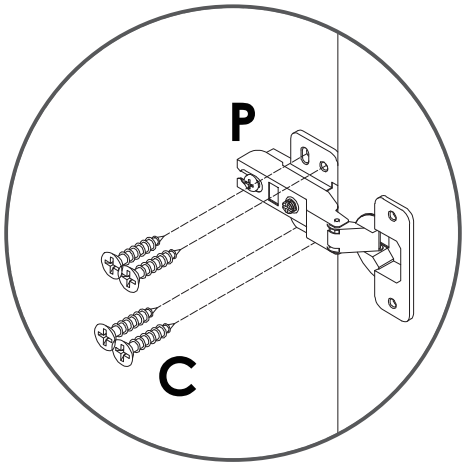

The ways to adjust the door

- ► Before adjusting the hinge, please check whether the cabinet is skewed.
- ► If the skew can not be repaired, adjust the cabinet to vertical position.
- ► Please adjust the hinge with the door open.

Obvious gaps between doors or Doors don't look closed

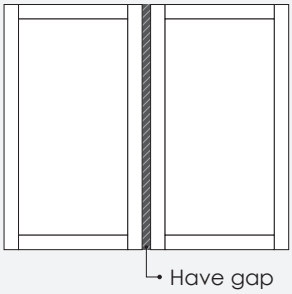

1 Turn "internal & external screw" to the right can make the door approach inside. Please adjust the doors little by little.

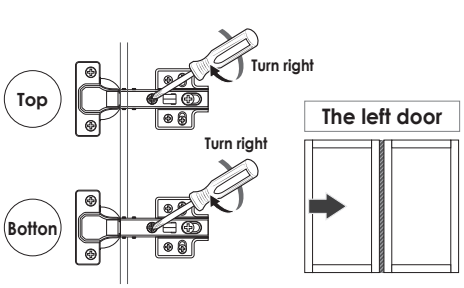

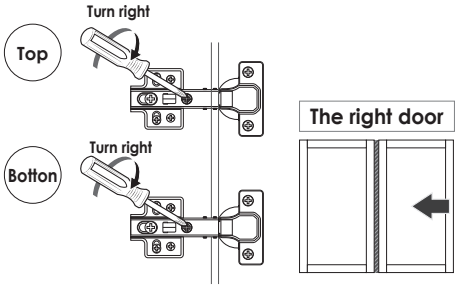

*** If the 2 doors are overlap, please turn the "internal & external screw" to the left.**

When door is crooked

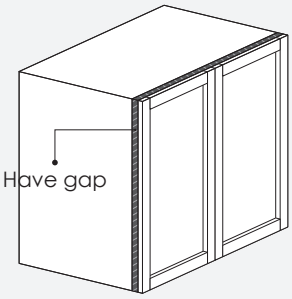

1 Rotate the "front and rear screws to the left.

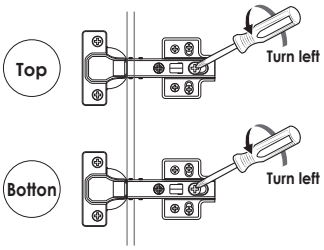

*After adjusting the "front and rear screw", the door still does not change, please turn the "internal & external screw" to the right Slightly.

2 Push the door to the cabinet.

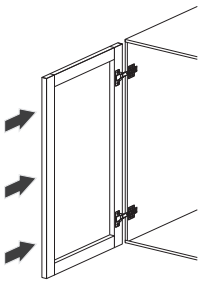

3 Rotate the "front and rear screws to the right.

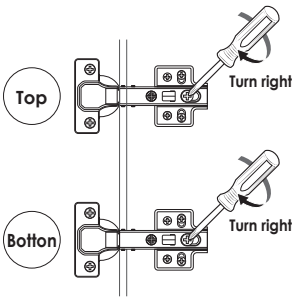

When door is leaning

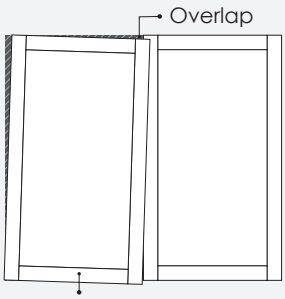

Turn "internal & external screw" to the left can make the top of the door tilted outward.

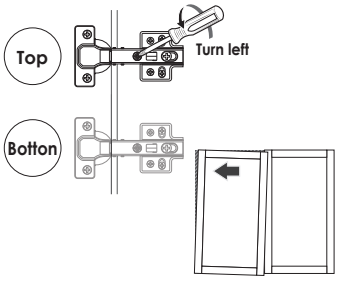

Protruding to the upside

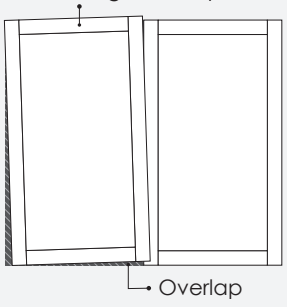

Tum "internal & external screw" to the left can make the bottom of the door tilted outward.

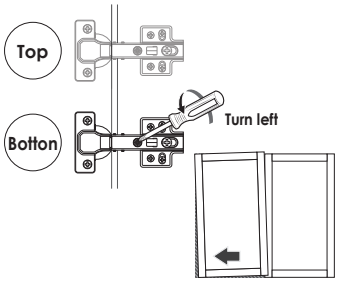

When the door is higher on top

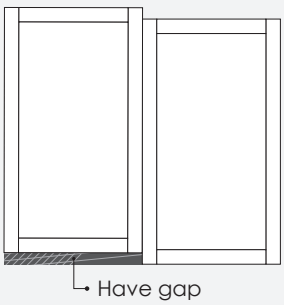

1 Tum "up & down screw" to the left.

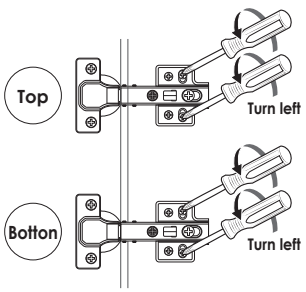

2 Lower the door's height so that 2 doors are of the same height.

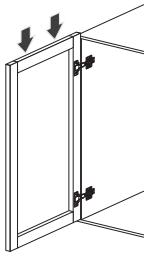

3 Turn "up & down screw" to the right.

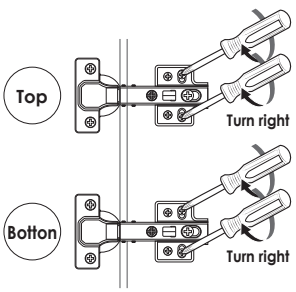

***If the door is lower on bottom, please lift up the left door slightly on step 2.**

50

J x7pcs



Q x7pcs



M4*20mm

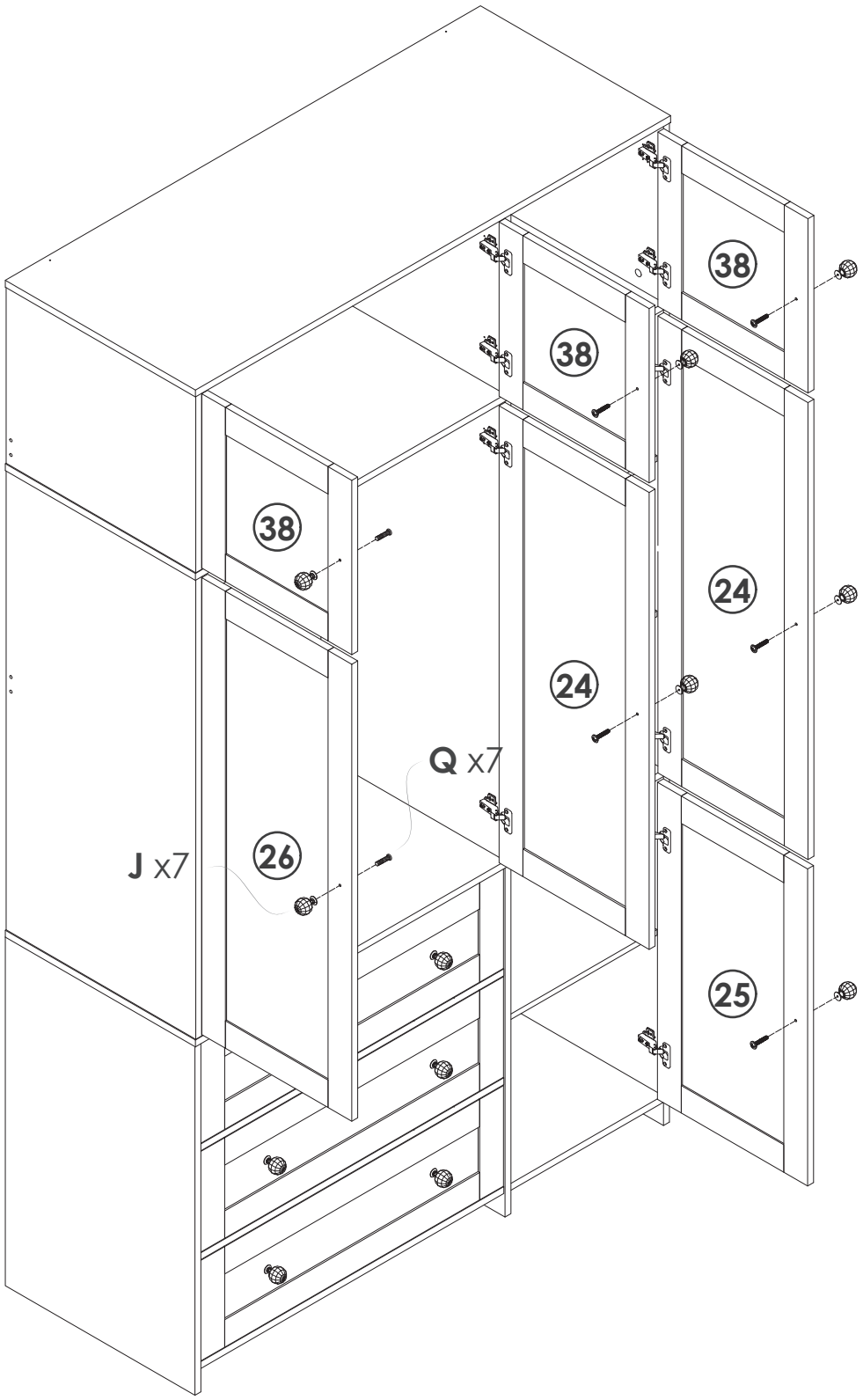

51

R x30pcs

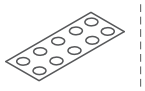

M3.5*14mm

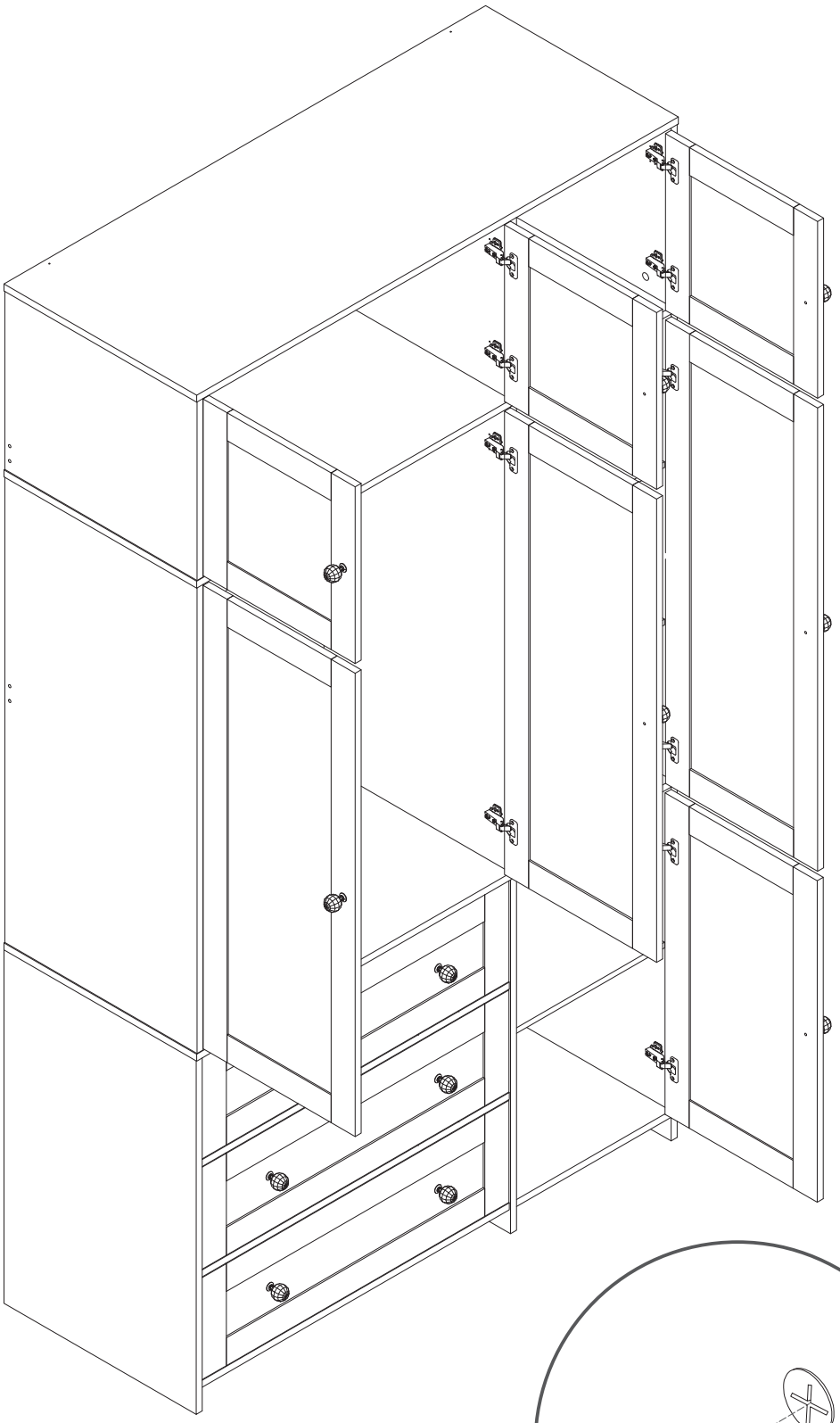

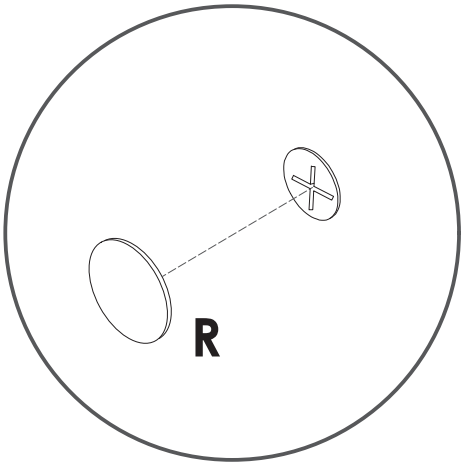

52

T x58pcs

T1

T2

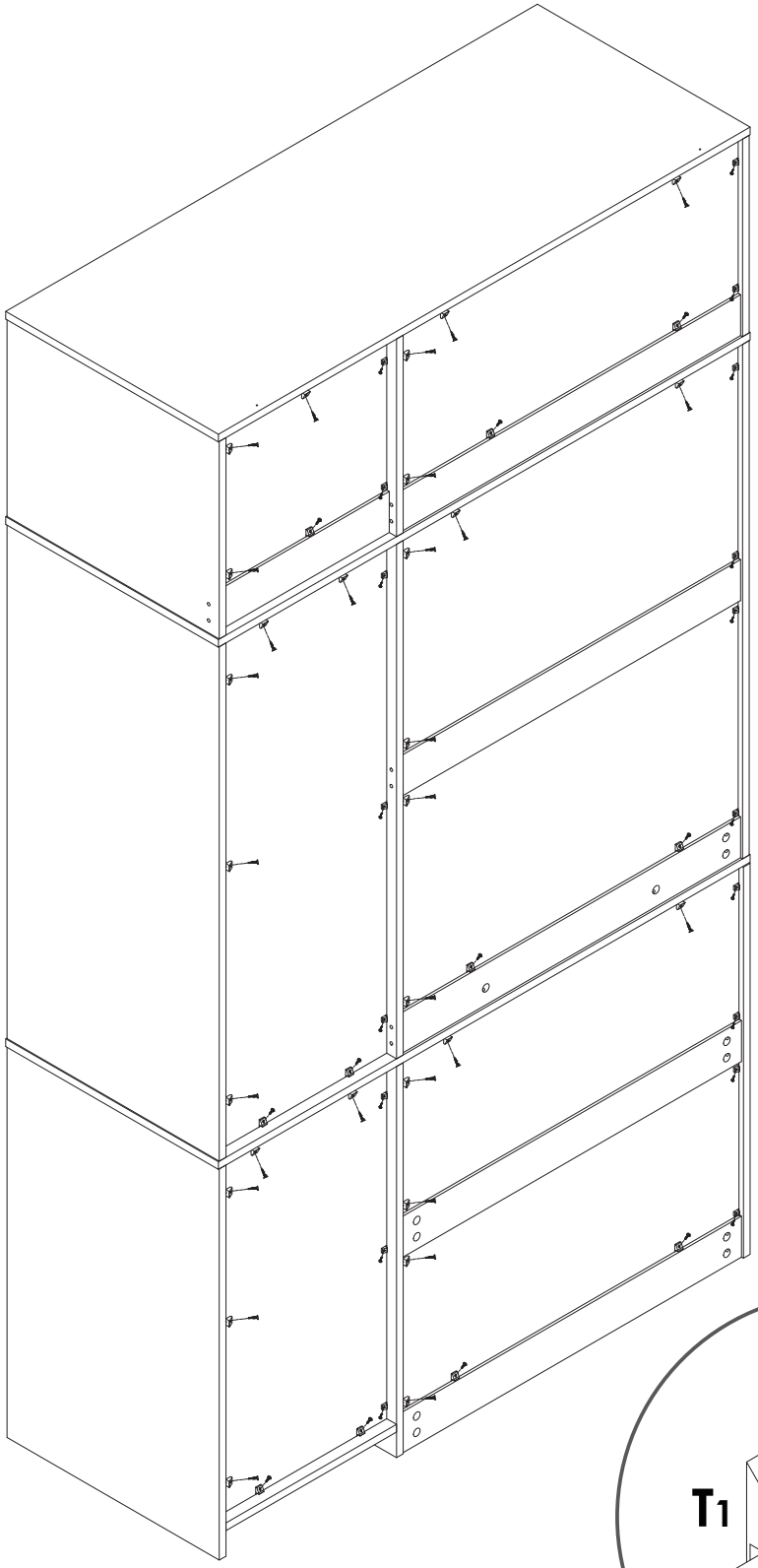

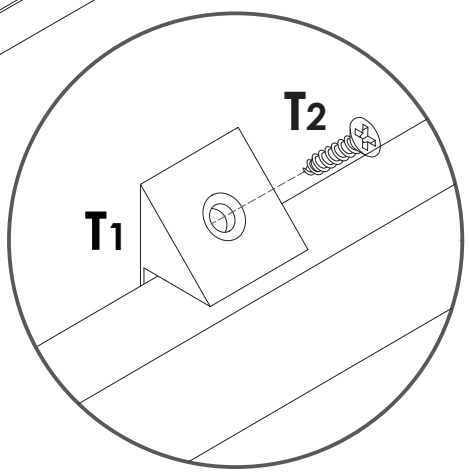

53 Mandatory!

S x2pcs

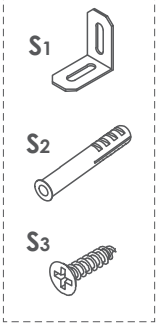

For safety reasons, we strongly recommend you follow these instructions to install the anti-tipping hardware, when installed properly, this hardware may prevent the unit from tipping unexpectedly.

⚠ WARNING

Children have died from furniture tipover. To reduce the risk of furniture tipover:

- ALWAYS install Anti-tip device provided.
- NEVER open more than one drawer at a time.
- NEVER put a TV on this product.
- Place heaviest items in the lowest drawers.
- NEVER allow children to stand, climb or hang on any drawers,doors, or shelves.

This is a permanent label. Do not remove!

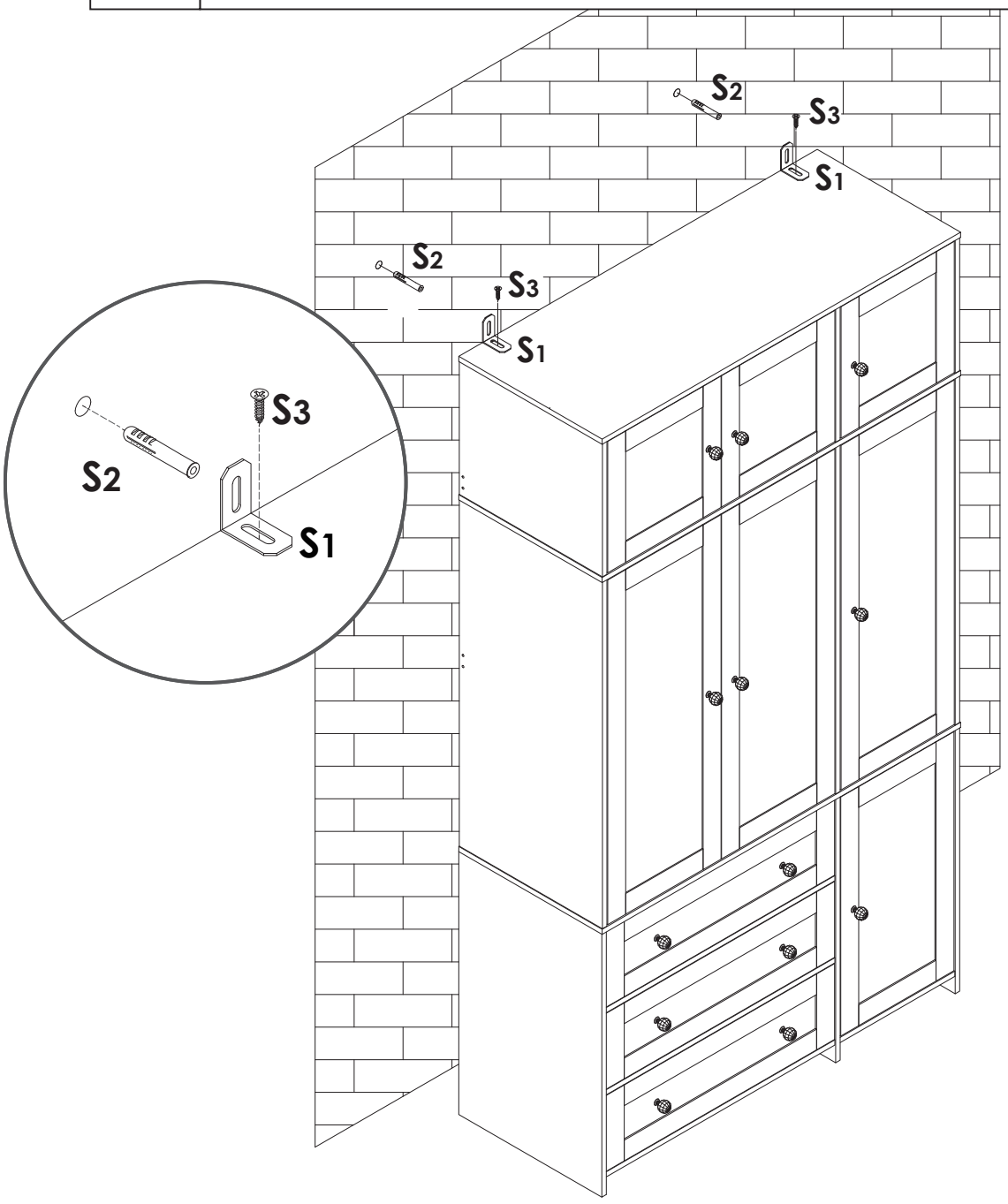

54

S x2pcs

