Dining Table and 4 Chairs

Assembly Instruction - Please keep properly for future reference.

If you find any missing boxes, damaged parts, or accessory shortages, please contact the customer service team of your purchasing channel immediately. We will resolve the issue as quickly as possible.

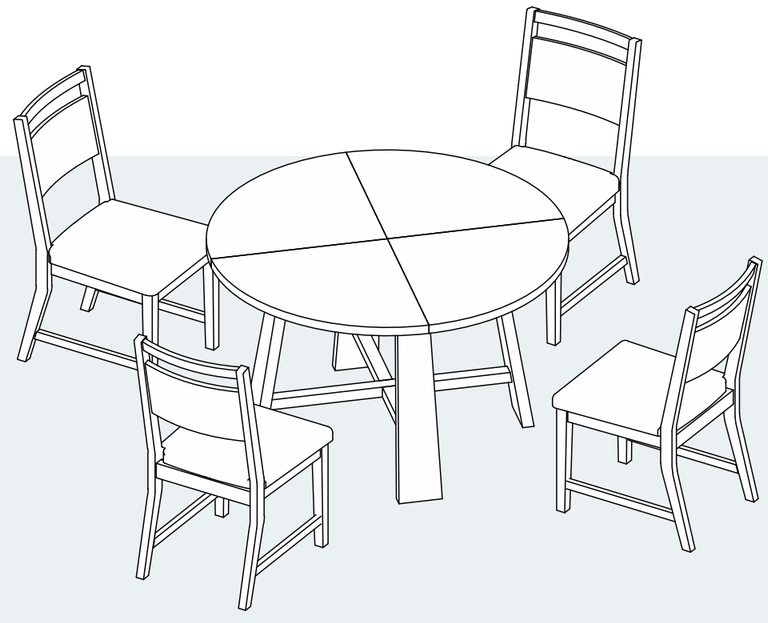

CONTACT US

- **Email: service@grandtunnel.com**
  In order to receive assistance more quickly, please provide

THE FOLLOWING INFORMATION:

- Order number
- Purchase platform
- Purchase date
- Detailed description of the issue along with photos (if applicable)

Important – Please read these instructions carefully before starting the installation.

Dining Table and 4 Chairs

SKU:
AL02IG-1B4A0

V1.0

EN

Before Assembly

Thank you for choosing our product!
To ensure a smooth installation process, please read this guide carefully to familiarize yourself with the required tools, materials, and installation steps.
Follow the relevant sections to avoid any damage caused by improper installation, and make sure to review all operation and safety guidelines for correct installation procedures.

Packaging Notice:

If you find any missing boxes, damaged parts, or accessory shortages, please contact the customer service team of your purchasing channel immediately. We will resolve the issue as quickly as possible.

Safety and Care Advice

Important :
Please read these instructions fully before starting assembly.

- Check you have all the components and tools listed on the following pages.
- Remove all fittings from the plastic bags and separate them into their groups.
- Keep children and animals away from the work area, small parts could choke if swallowed.
- Make sure you have enough space to layout the parts before starting.
- During assembly do not stand or put weight on the product, this could cause damage.
- Assemble the item as close to its final position (in the same room) as possible.
- Assemble on a soft level surface to avoid damaging the unit or your floor.
- Parts of the assembly will be easier with 2 people.



- To reduce the likelihood of damaging your product please ensure that your power drill is set on a low torque setting.

Email : **service@grandtunnel.com**

EN

Care and Maintenance

- Only clean using a damp cloth and mild detergent, do not use bleach or abrasive cleaners.
- From time to time check that there are no loose screws on this unit.
- This product should not be discarded with household waste. Take to your local authority waste disposal center.

Handy Hints

- Assemble all parts and bolts loosely during assembly, only once the product is complete should you fully tighten the bolts.
- Regularly check and ensure that all bolts and fittings are tightened properly.

Warning

In order to help prevent overturning, please follow these instructions.

- Use the anti tip strap or wall fixing method provided (if applicable).
- Do not allow children to climb or hang on the furniture.
- Do not open more than one drawer at a time.
- Do not place heavy items in the top drawers.
- Do not place heavy items on top of the furniture, unless the furniture has been designed for this purpose.
- Please note that only the anti tip strap is provided. You will need to provide wall plugs and screws applicable for your wall type.

Email : **service@grandtunnel.com**

Customer Service Guide

Thank you for choosing our product! We are committed to providing you with excellent service. If you find any missing parts, damaged packaging, or product damage after receiving all packages, please follow the steps below to quickly contact our customer service team. We will do our best to resolve your issue.

1. Missing Parts

Verify Parts:

1. Refer to the “Parts List” in the manual to verify the name, specifications, and quantity of the missing parts.
2. Take a clear photo of the parts list and mark the missing parts with detailed information, e.g., “Missing 5 pieces of M6×30mm screws.”

Contact Us:

By Email:

Send an email to **service@grandtunnel.com**, with the subject line “Missing Parts Issue.” Include the following in the email:

- A description of the missing parts and a photo of the parts list.
- Order details (order number, purchase platform, purchase date).

2. Product or Packaging Damage

If it affects normal use:

Steps:

1. Take clear photos or videos showing the damaged parts and the extent of the damage (multi-angle shots are recommended).
2. Email the photos/videos along with order details to **service@grandtunnel.com**, with the subject line “Product Damage Issue.”

Resolution:

After verification, we will arrange for a replacement part, product exchange, or refund as quickly as possible.

If it does not affect normal use:

Steps:

1. Contact our customer service team (by email: **service@grandtunnel.com**).
2. Provide a description of the damage and include relevant photos or videos.

Resolution:

We will provide repair guidance or an appropriate compensation plan based on the specific situation.

Contact Us:

Customer Service Email: **service@grandtunnel.com**

Helpful Tips

To process your issue efficiently, please prepare the following information:

- Order details (order number, purchase platform, purchase date).
- Clear photos or videos.
- We are committed to providing quick and professional solutions, no matter the size of the issue, to ensure your satisfaction.

Thank you for your trust and support!
We hope you enjoy using our product!

EN

Parts List - Panels

Please check you have all the panels listed below.

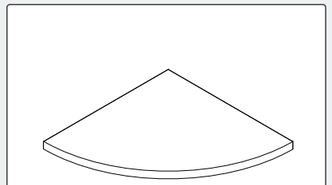

1 584x584x32mm x4

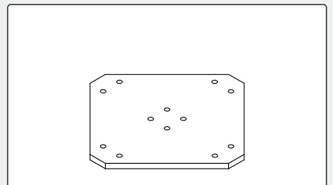

2 400x400x17mm x1

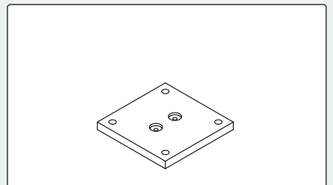

3 180x180x17mm x4

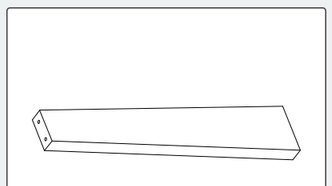

4 730x125x32mm x4

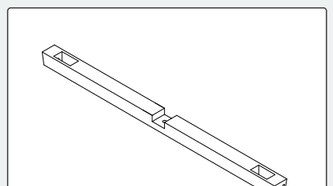

5 849x45x38mm x1

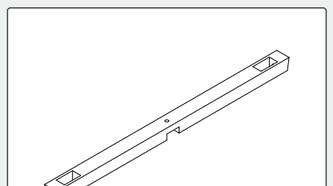

6 849x45x38mm x1

Chair

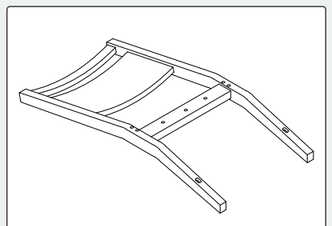

7 915x431x120mm x4

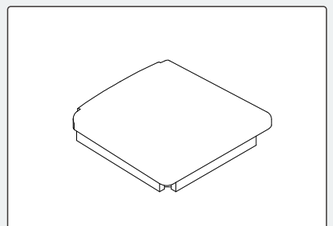

8 455x450x110mm x4

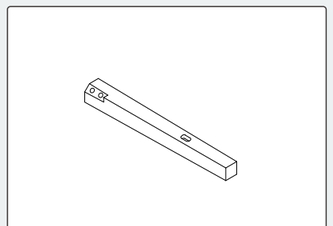

9 410x40x40mm x4

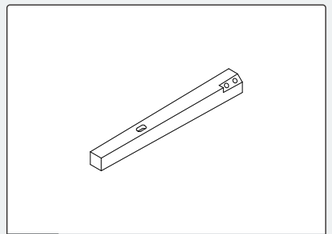

10 410x40x40mm x4

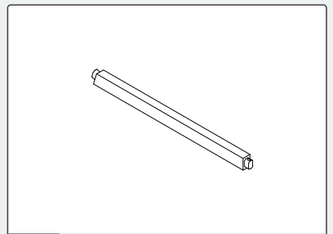

11 460x30x20mm x8

Email : **service@grandtunnel.com**

Parts List - Fittings

Please check you have all the fittings listed below.

Note: The quantities below are the correct amount to complete the assembly. In some cases more fittings may be supplied are required.

Hardware for dining table

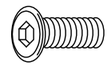

A 1/4"x15mm x8



B 1/4"x11mm x8

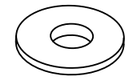

C 1/4"x19mm x8

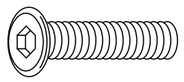

D 5/16"x30mm x41

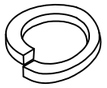

E 5/16"x13mm x41

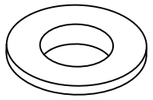

F 5/16"x19mm x41

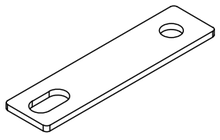

G 100x25x3mm x4

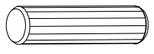

H Ø8x30mmmm x12

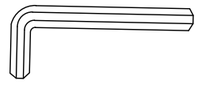

I 4mm x1

EN

Email : **service@grandtunnel.com**

Hardware for dining chair

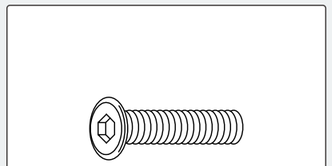

J 5/16"x38mm **x8**

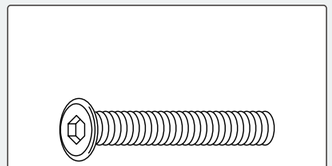

K 5/16"x50mm **x16**

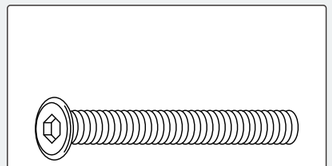

L 5/16"x76mm **x16**

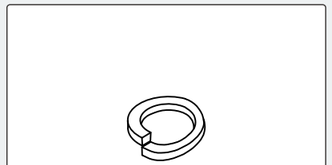

M 5/16"x13mm **x40**

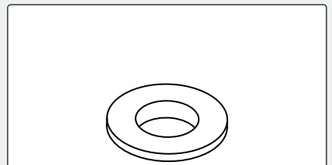

N 5/16"x19mm **x40**

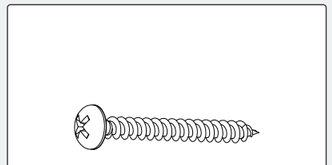

O #4x45mm **x16**

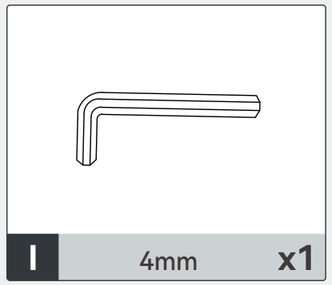

I 4mm **x1**

Tools required

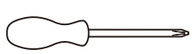

Phillips screwdriver
(medium & large)

Ruler

Use this ruler to help correctly identify the screws

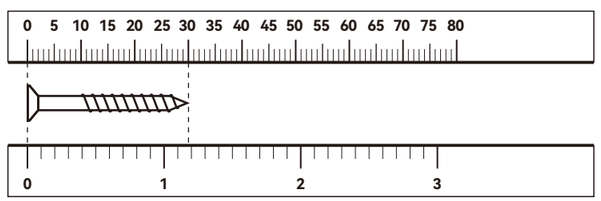

The screws length is measured from the head to the point (30mm screw shown).

Email : **service@grandtunnel.com**

Assembly Instructions

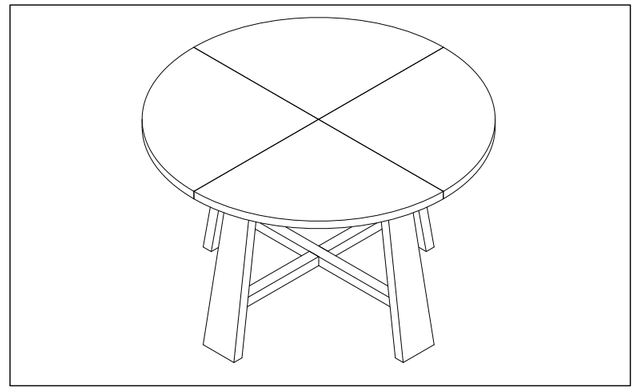

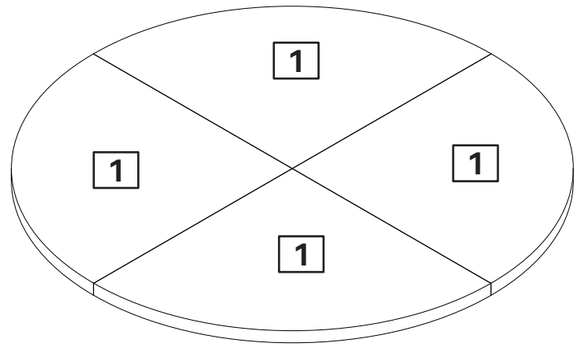

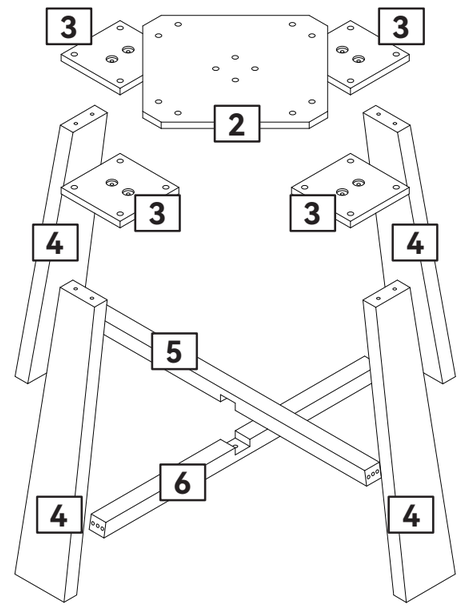

Email : **service@grandtunnel.com**

EN

Assembly Instructions

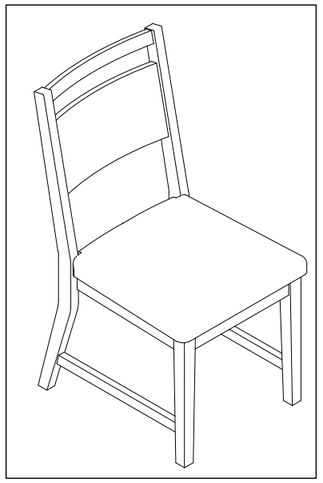

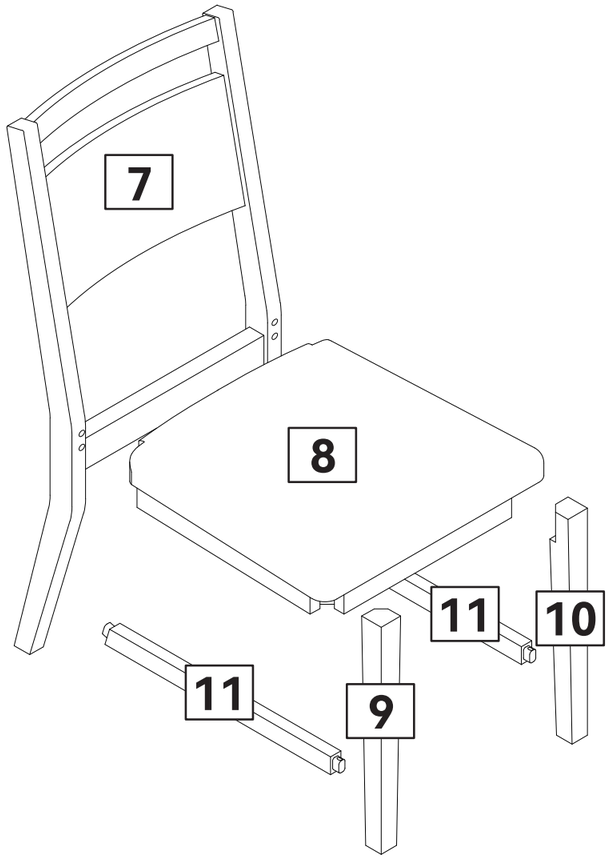

x4

Email : **service@grandtunnel.com**

Step 1

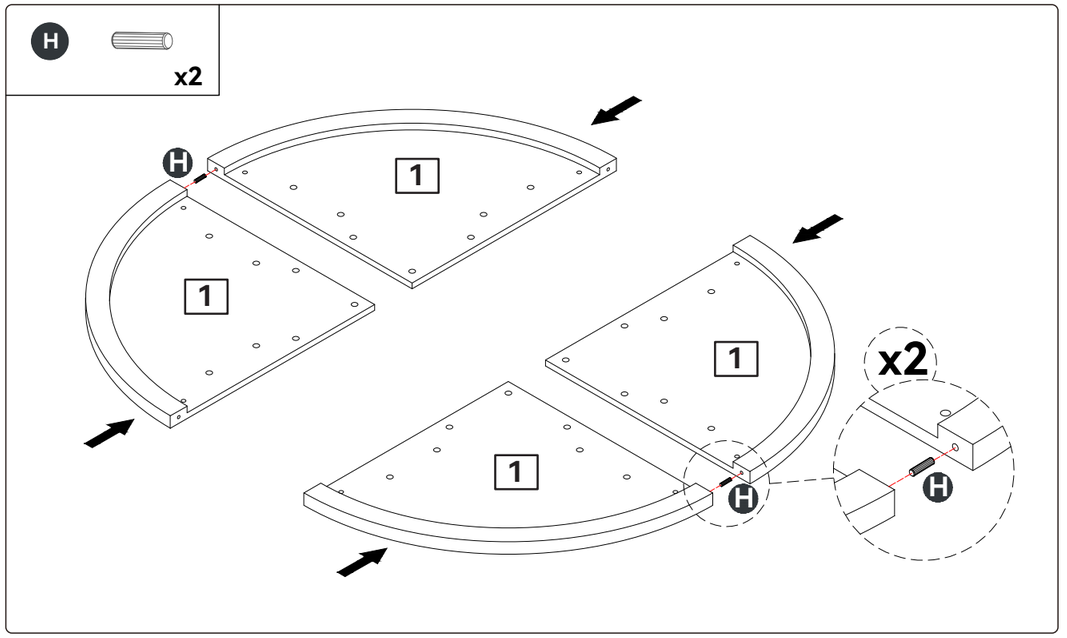

Use the Wooden Dowels (H) to connect the two Panels (1).

Step 2

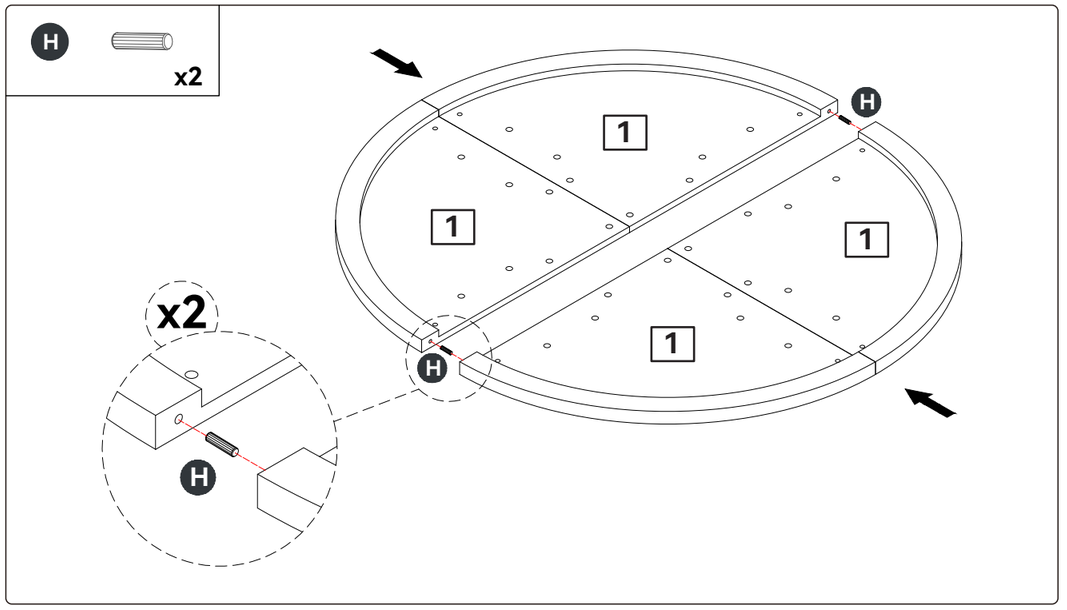

Insert the Wooden Dowels (H) into the other side of the Panels (1) and bring the four panels together.

Email : **service@grandtunnel.com**

EN

Step 3

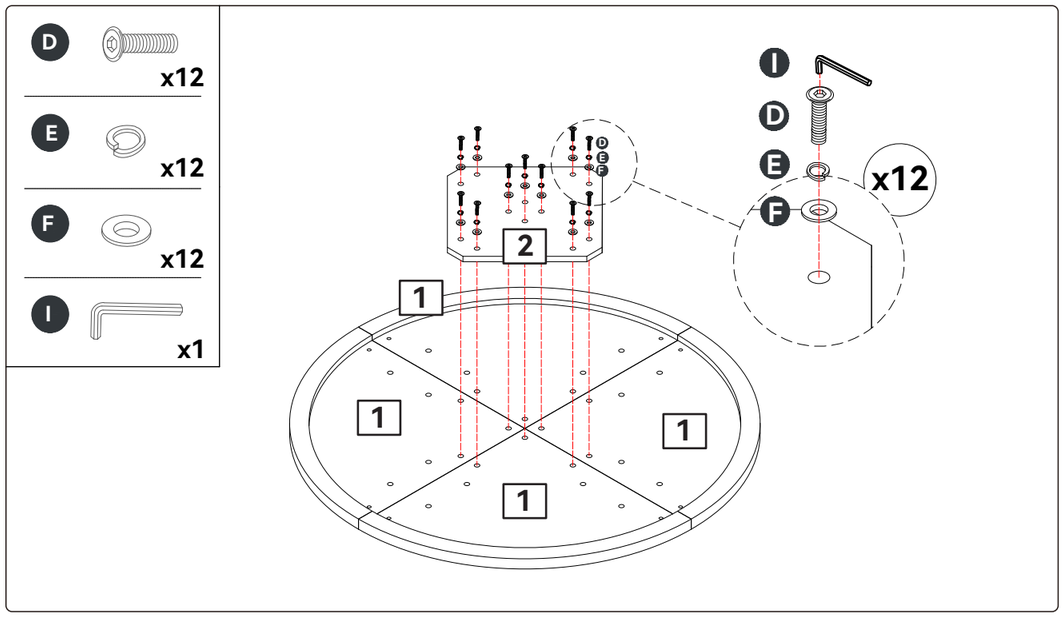

Attach Part (2) to Panels (1), using Flat Washer (F), Lock Washer (E), and Bolt (D). Tighten them with the Allen Key (I).

Step 4

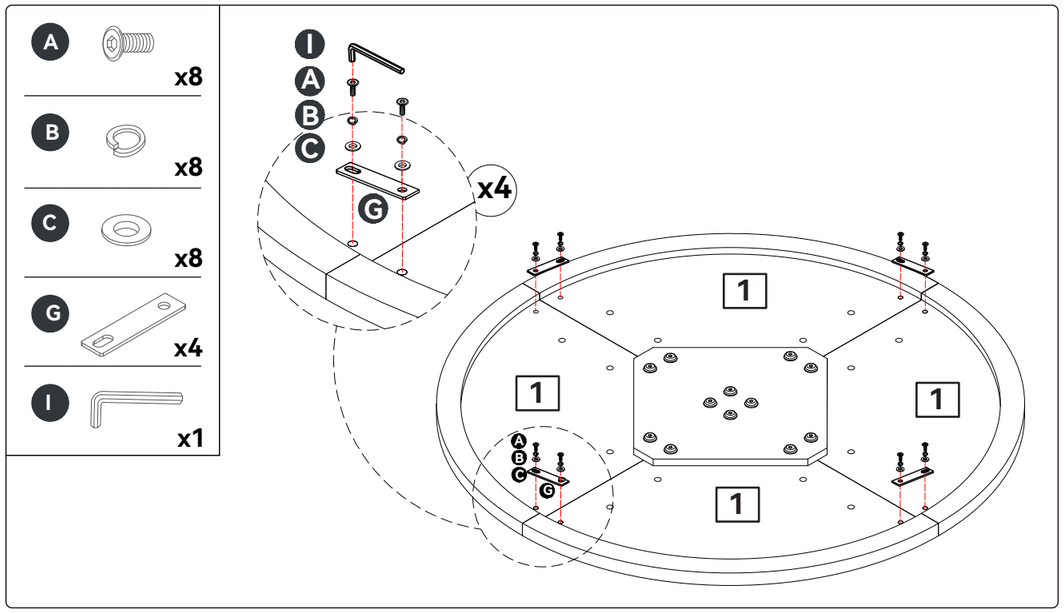

Attach Parts (G) to Panels (1), using Flat Washer (C), Lock Washer (B), and Bolt (A). Tighten them with the Allen Key (I).

Email : **service@grandtunnel.com**

Step 5

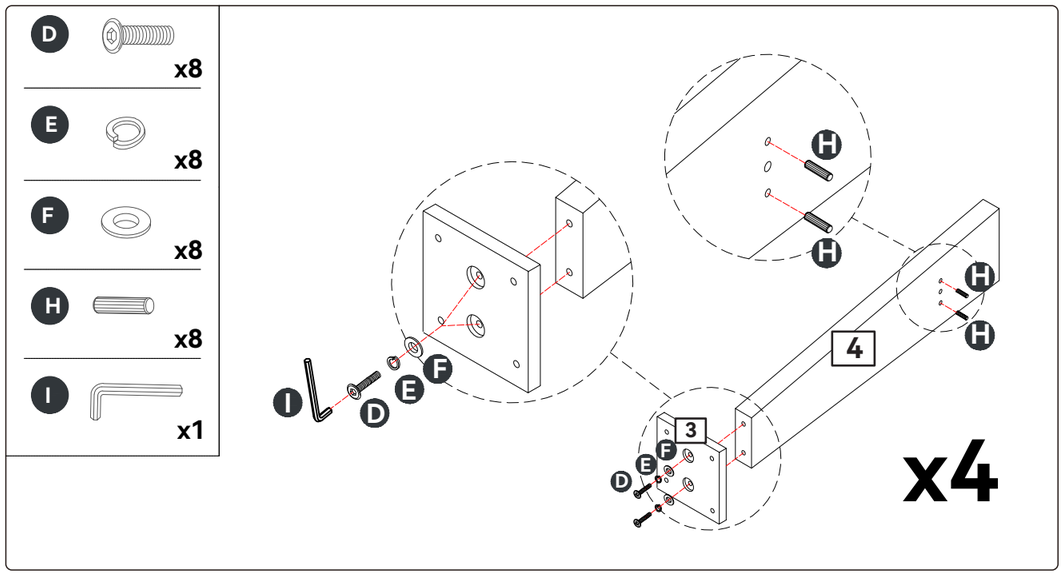

- Attach Parts (3) to Parts (4), using Flat Washer (F), Lock Washer (E), and Bolt (D). Tighten them with the Allen Key (I).
- Insert Wooden Dowels (H) into Parts (4).

Step 6

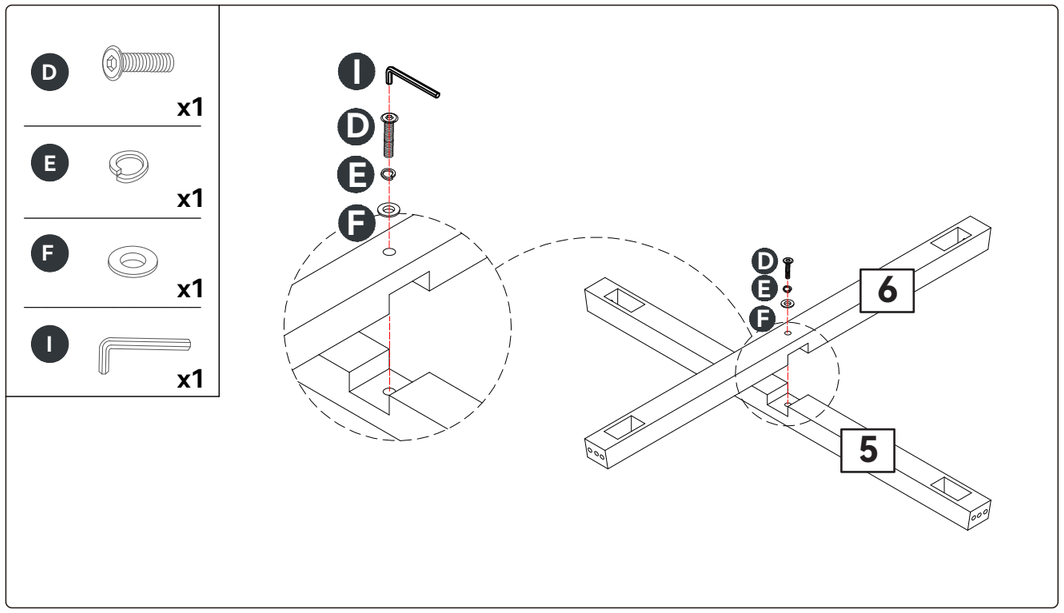

Attach Part (6) to Part (5), using Flat Washer (F), Lock Washer (E), and Bolt (D). Tighten it with the Allen Key (I).

Email : **service@grandtunnel.com**

EN

Step 7

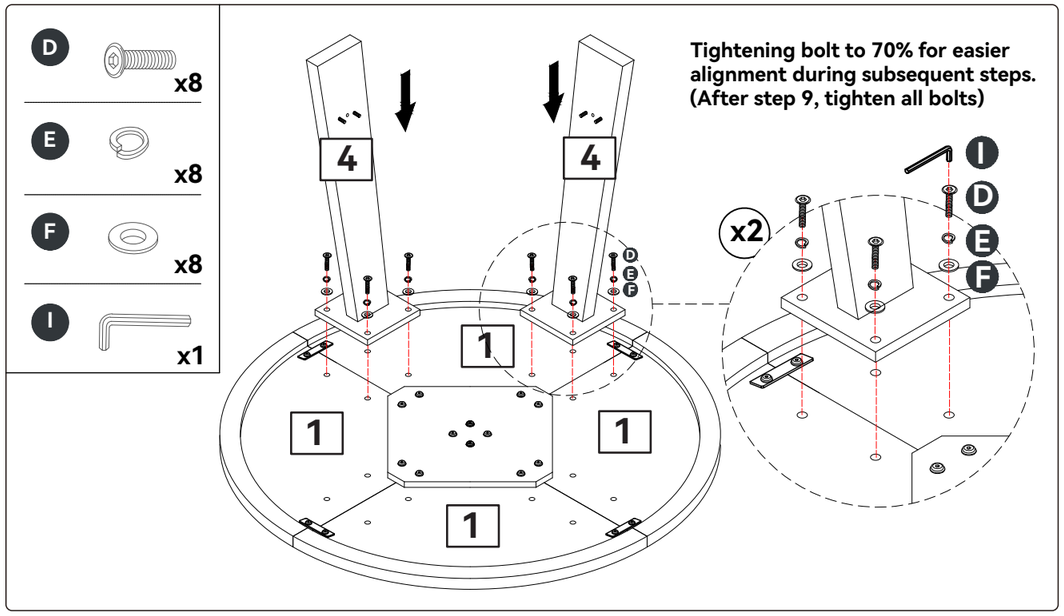

Attach Legs (4) to Panels (1), using Flat Washer (F), Lock Washer (E), and Bolt (D). Tighten them with the Allen Key (I).

Step 8

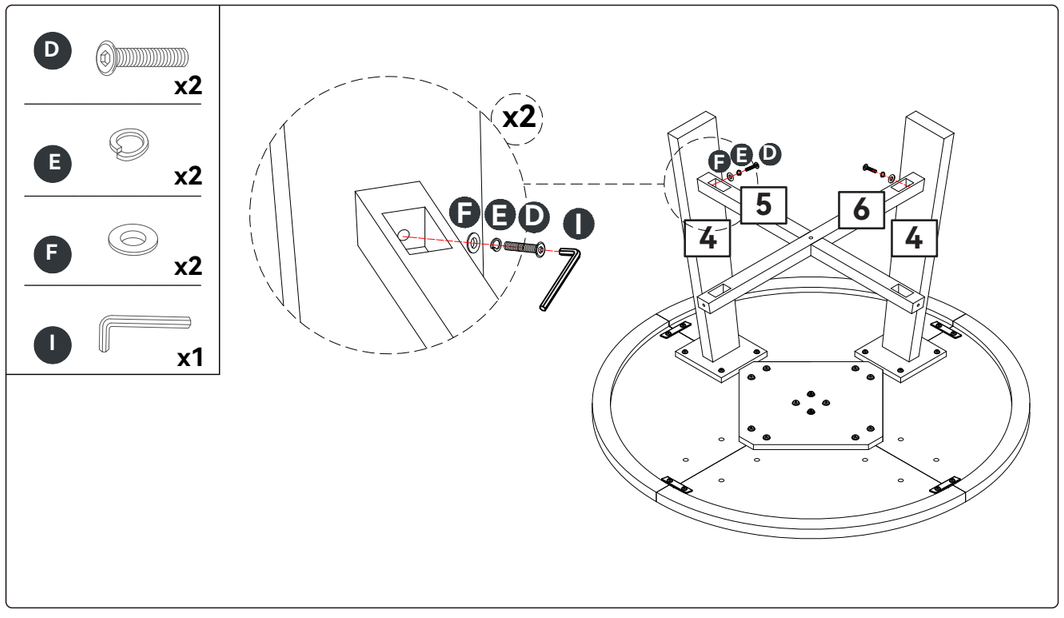

Attach Bottom Rail (5,6) to Parts (4), using Flat Washer (F), Lock Washer (E), and Bolt (D). Tighten them with the Allen Key (I).

Email : **service@grandtunnel.com**

Step 9

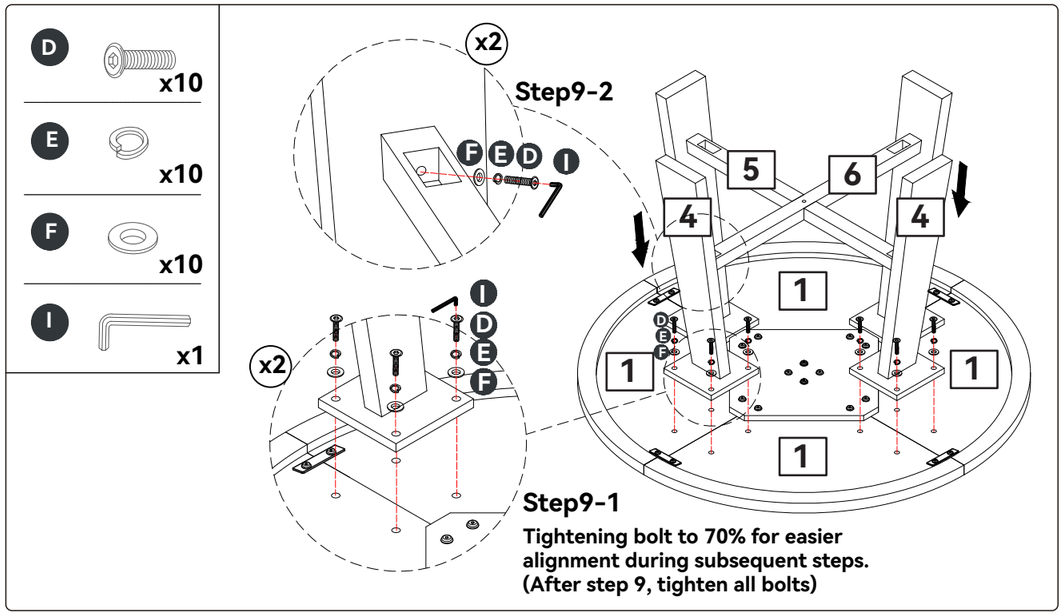

- Attach the other two Legs (4) to Panels (1), using Flat Washer (F), Lock Washer (E), and Bolt (D). Tighten them with the Allen Key (I).
- Align the Wooden Dowel on the other two Legs (4) with Parts (5,6), using Flat Washer (F), Lock Washer (E), and Bolt (D). Tighten them with the Allen Key (I).

Step 10

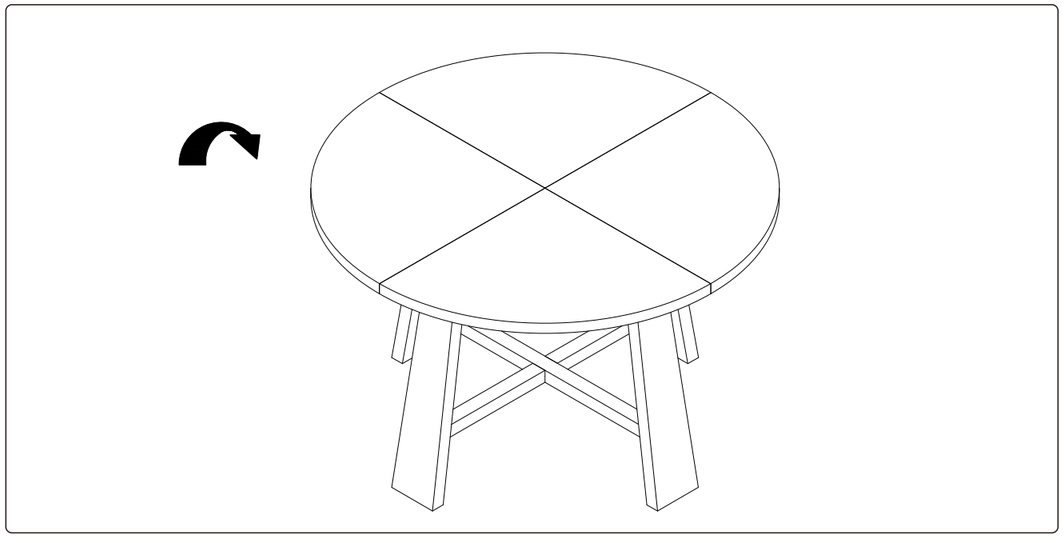

Overturn the table and place it on a flat surface, then tighten all the bolts in Step (7,9) with the Allen Key (I).

Email : **service@grandtunnel.com**

Step 11

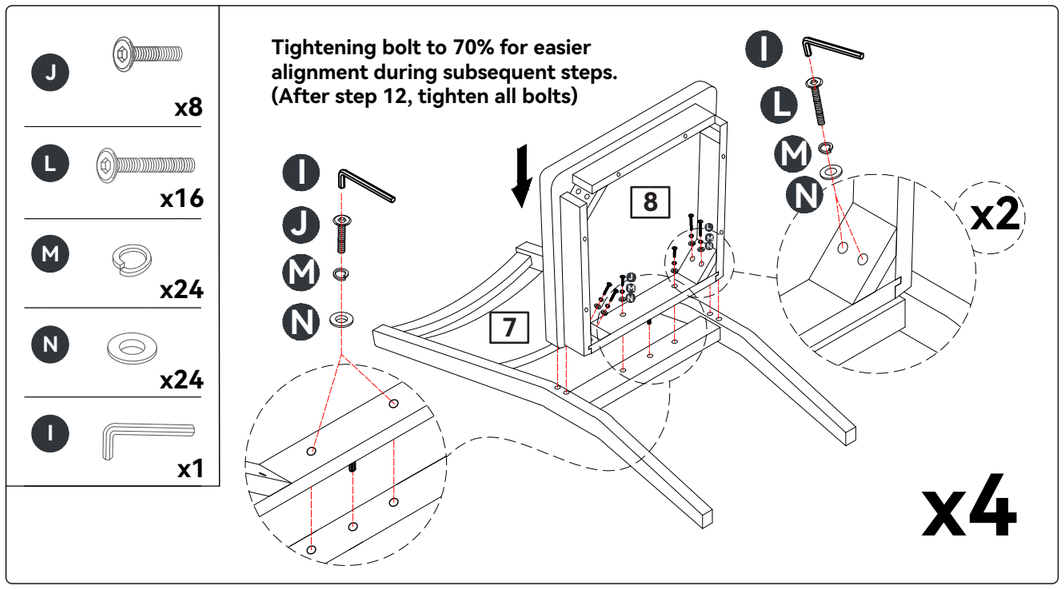

Attach Part (8) to Part (7), using Flat Washer (N), Lock Washer (M), and Bolt (J,L). Tighten them with the Allen Key (I).

Step 12

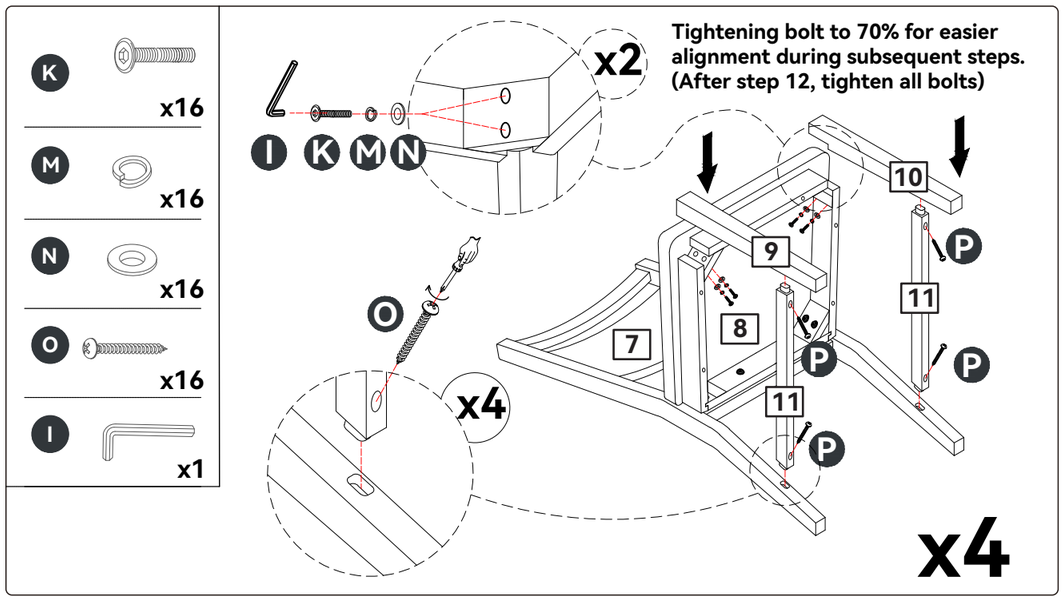

- Attach Parts (9,10) to Part (8), using Flat Washer (N), Lock Washer (M), and Bolt (K). Tighten them with the Allen Key (I).
- Insert Parts (11) to Parts (7,9,10), using the Screw (O) with a screwdriver.

Email : **service@grandtunnel.com**

Step 13

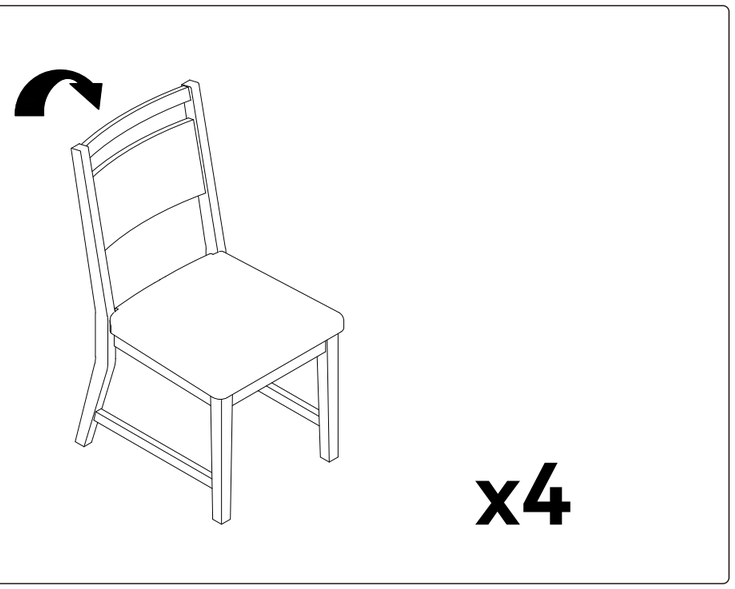

Overturn the chair and place it on a flat surface, then tighten all the bolts in Step (11,12) with the Allen Key (I).

Step 14

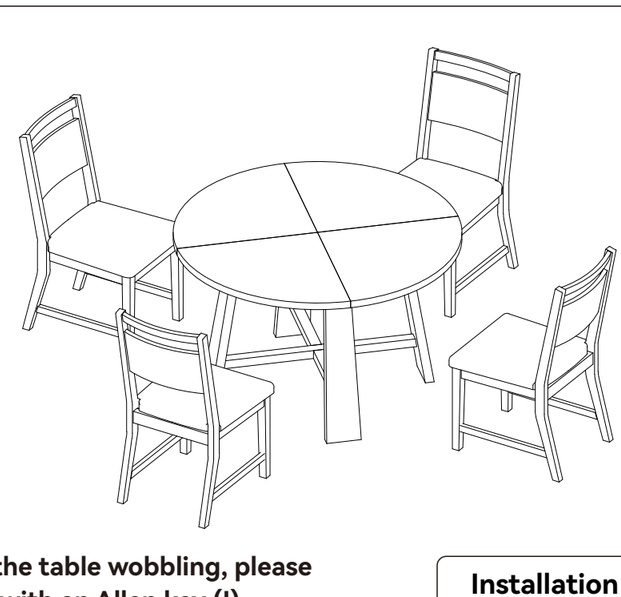

Note: If you find the table wobbling, please tighten the bolts with an Allen key (I).

Installation Complete.

Installation Complete.

Email : **service@grandtunnel.com**