Instruction Manual

Item model number : THN00260-18Inch

(To reduce the risk of fire, electric shock, or injury to persons):

1. We suggest installation by a licensed electrician.
2. Before you start, A).Go to the main fuse, or circuit breaker, box in your home.
   Place the main power switch in the “OFF” position. B). Place the wall switch in the “OFF” position.
3. Make sure that the ceiling or wall can bear the weight of the lamp before fixture.
4. Make sure the voltage you are using is 120V. The maximum wattage is 60W per bulb.
5. When replacing bulb, you should turn off or unplug the lamp and you must wait until it is cool as bulbs get hot quickly.
6. The safety instructions appearing in this manual are not meant to cover all possible conditions that may occur.

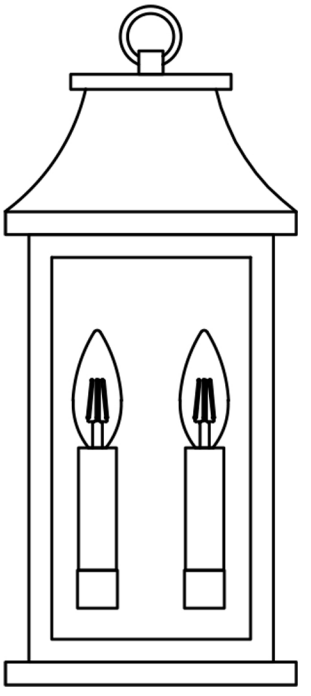

HARDWARE INCLUDED

Metal Holder Tube | Metal Ring | Rubber Gasket | Mounting Screws | Wire Nuts

Installation Procedure

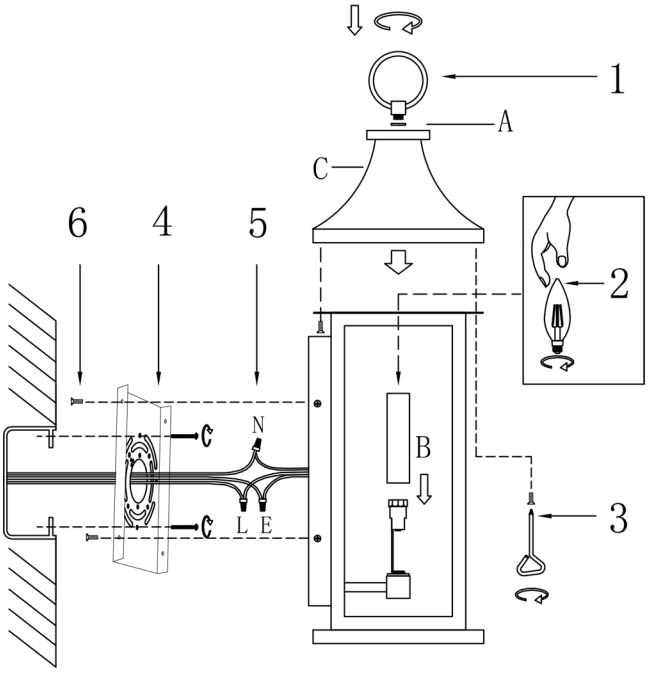

If you encounter any problems during installation, such as not knowing how to install components or missing accessories, please contact us immediately through the **'Contact Seller'** option on your order page. We will resolve your issue promptly.

Step1. Install Main Assembly:
Place the rubber gasket (A) onto the bottom of the metal ring. Attach the metal ring to the light fixture's top cover (C) and rotate until secure.

Step2. Install Bulb Holder & Bulb:
Attach the metal bulb holder tube (B). Install an E12 base bulb into the holder.

Step3. Secure Top Cover:
Position the top cover (C) onto the lamp body. Secure with provided screws to complete lamp assembly.

Step4. Prepare Mounting Area:
Turn off power at the circuit breaker. Mount the hanging plate to the electrical junction box.

Step5. Connect Wiring:
Connect the lamp's power cord wires (L [Live], N [Neutral], E [Earth/Ground]) to corresponding terminals in the junction box.

Step6. Mount the Light Fixture:
Place the assembled lamp onto the wall mounting plate. Secure firmly with screws. Installation is complete.

If you need any help, please contact us.