DIMENSIONS

Rough-In Dimensions

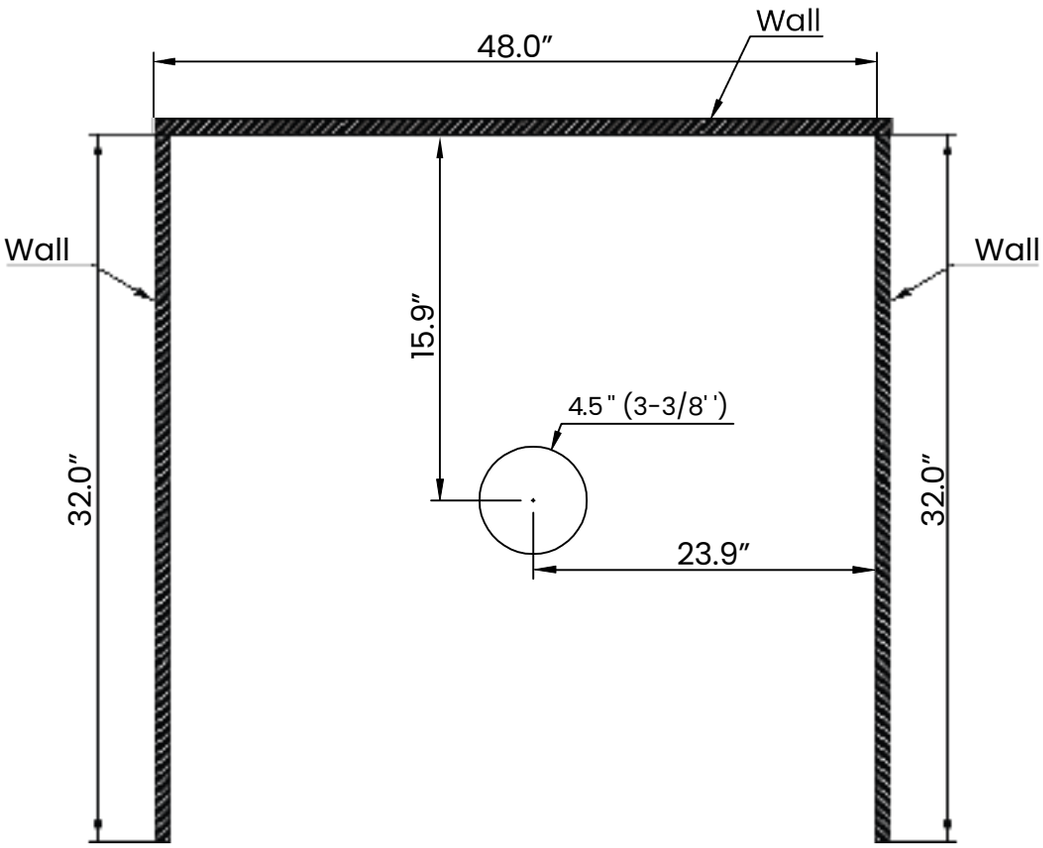

Product Dimensions

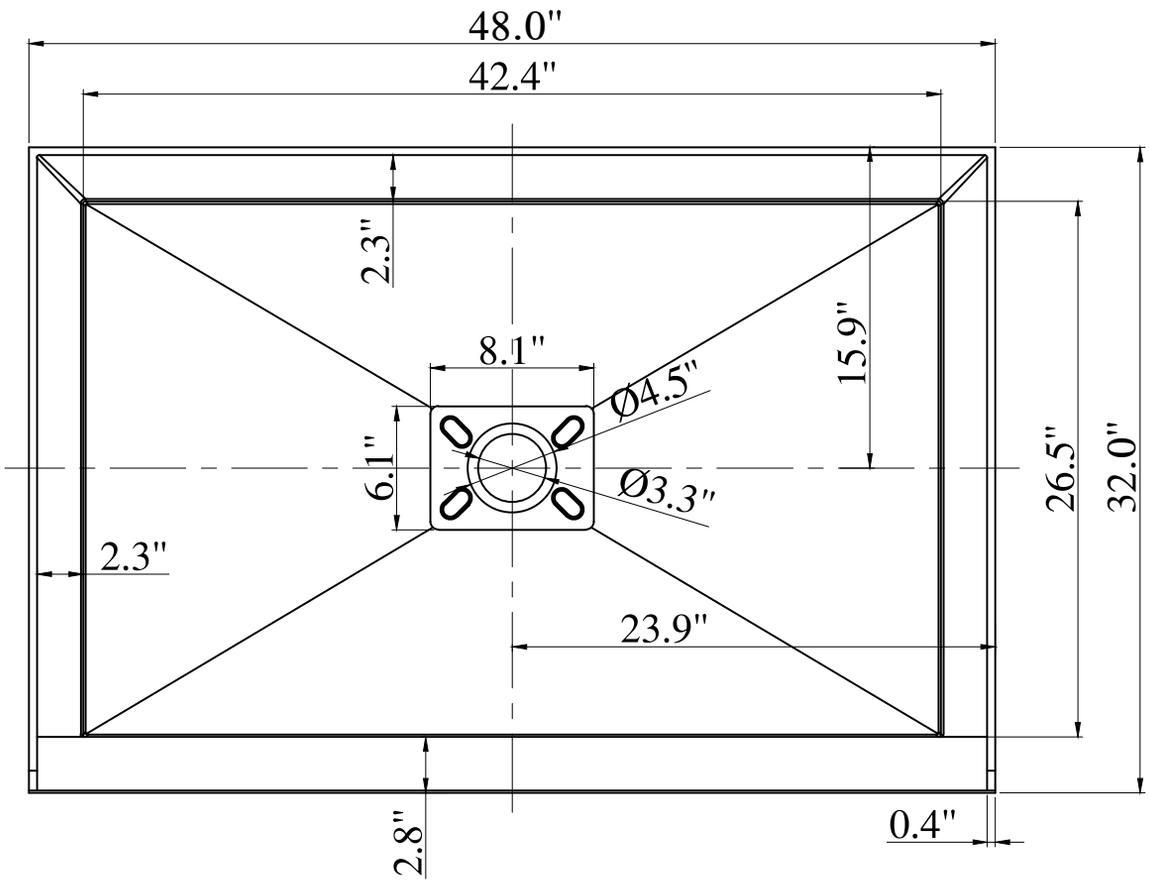

DIMENSIONS

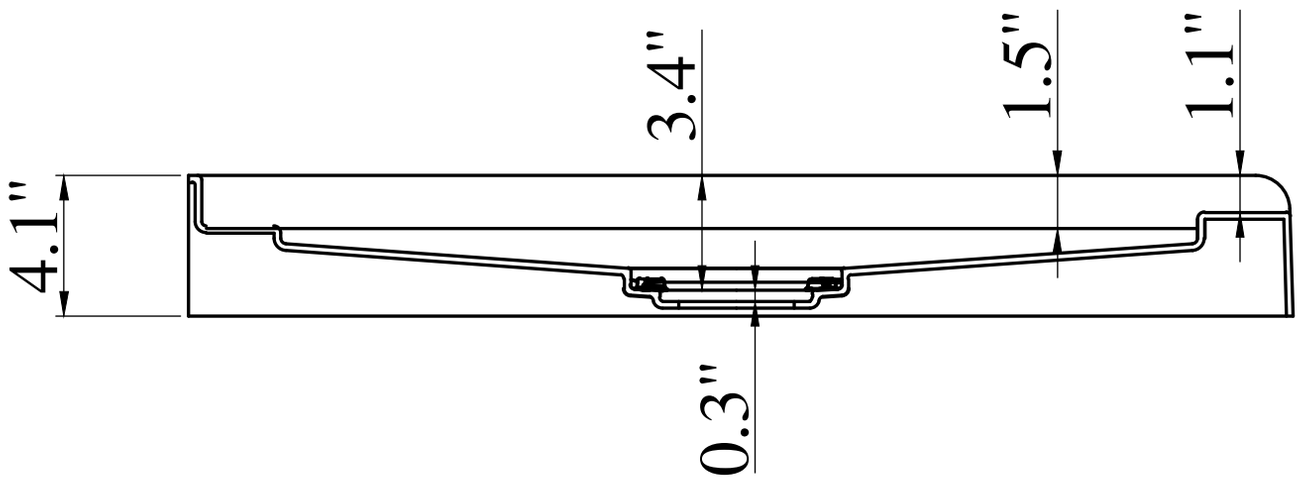

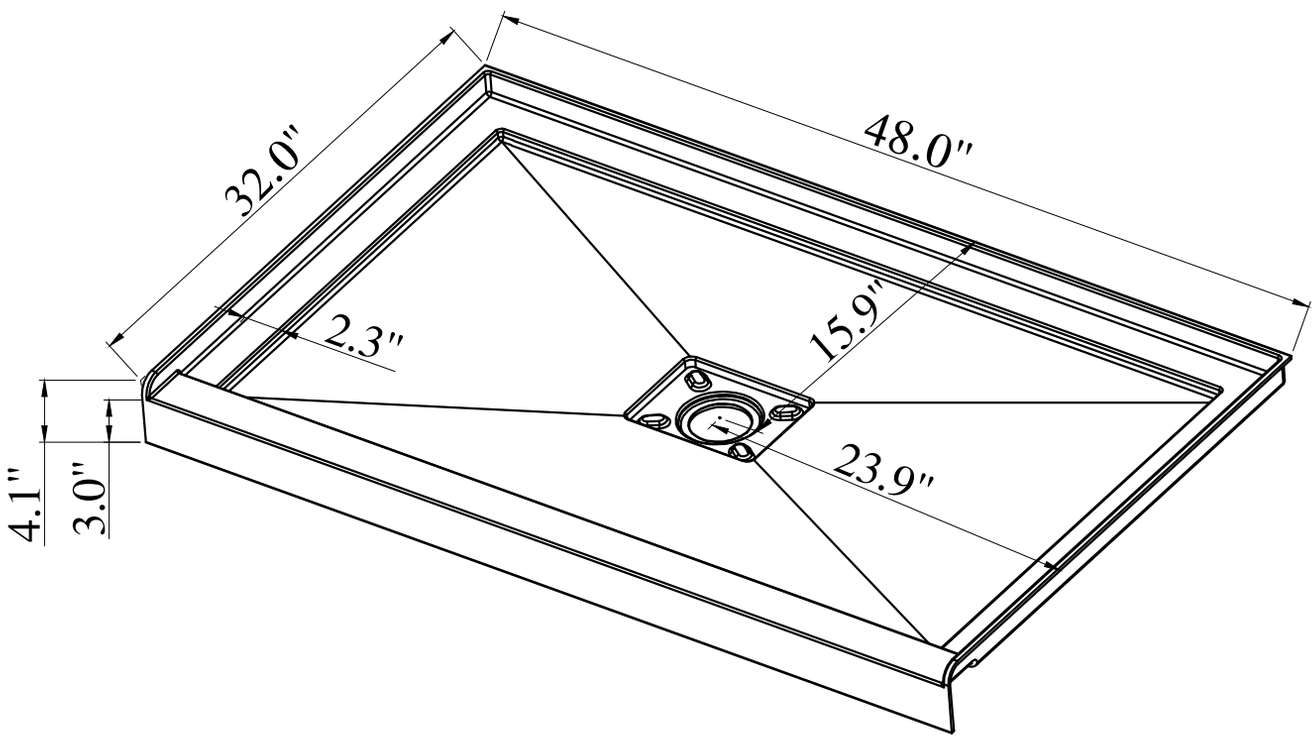

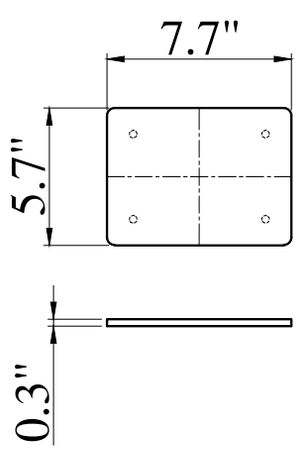
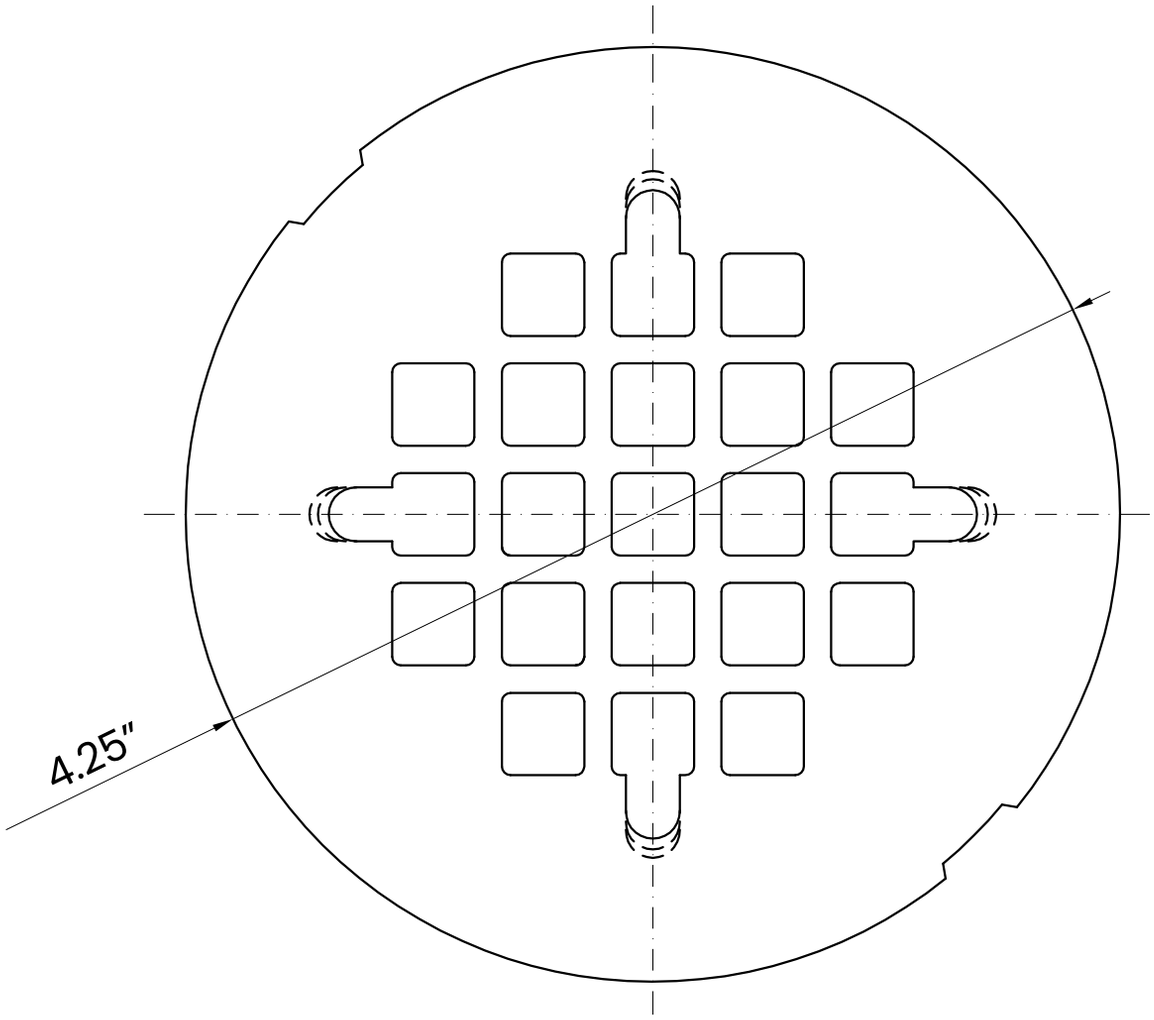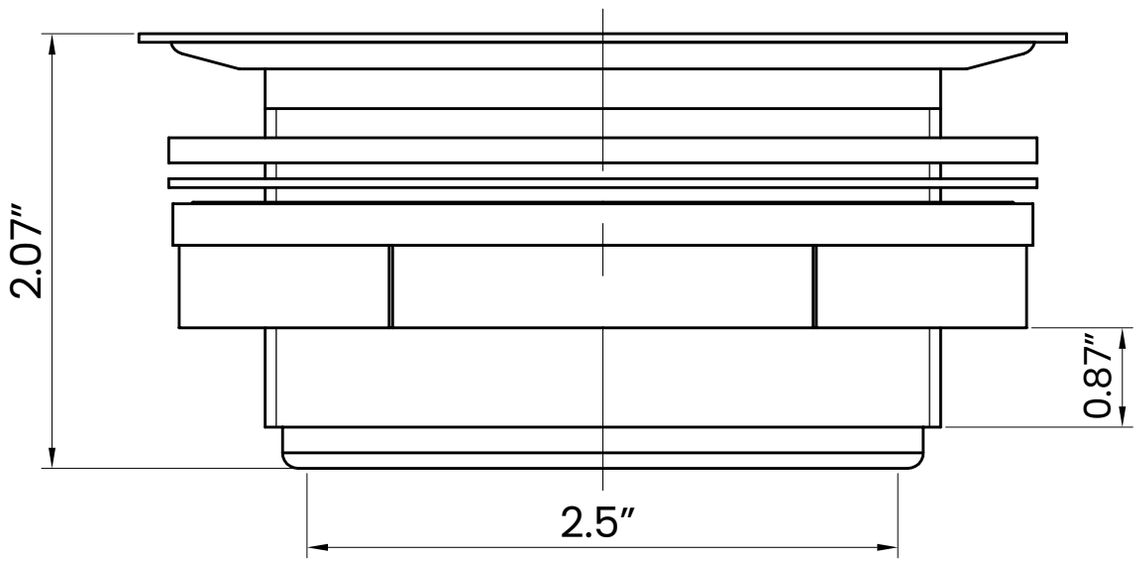
DIMENSIONS