# Installation Manual

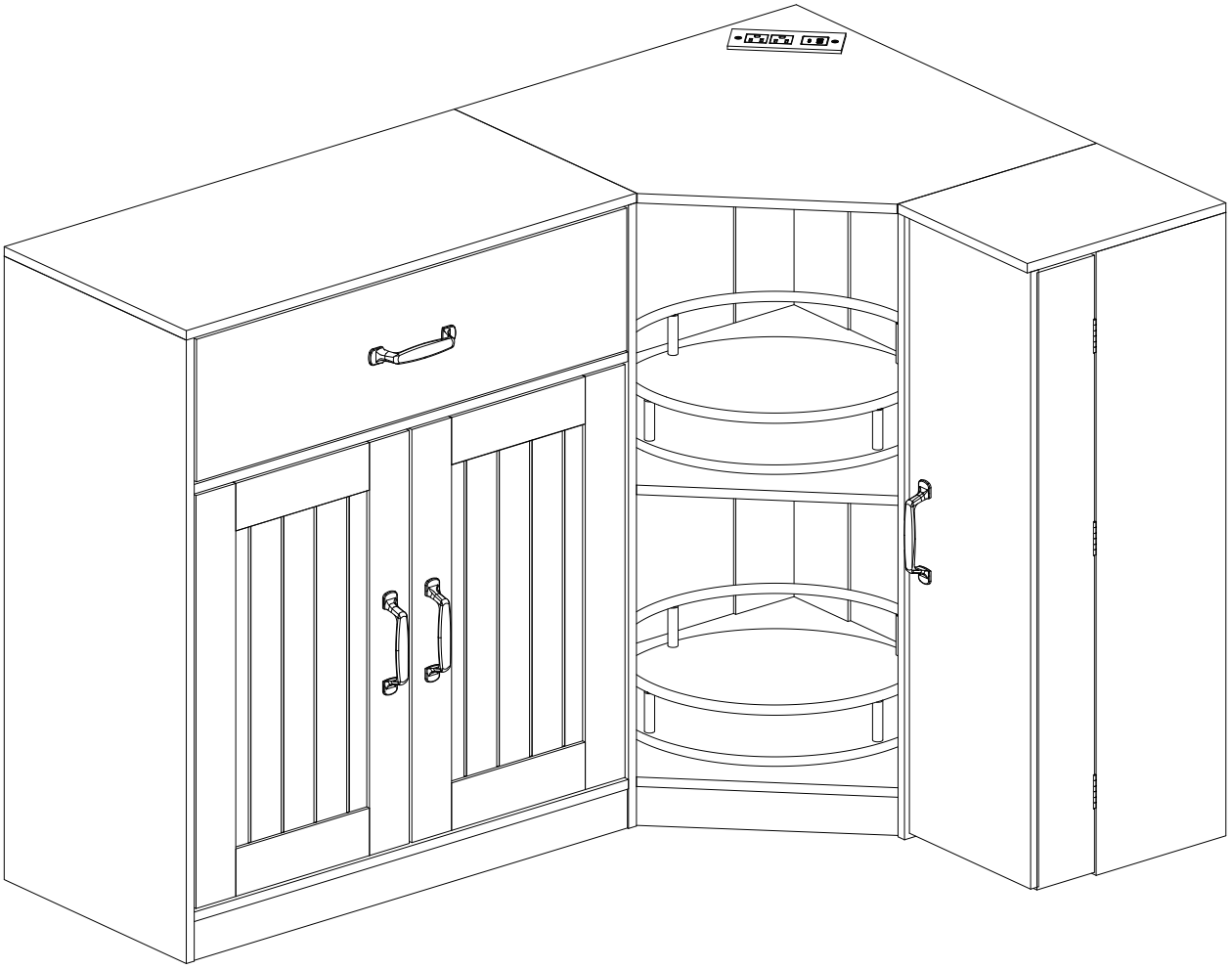

Made in China

**Hi! Dear buyer, Thank you for choosing our products. Please carefully follow the assembly instructions below to ensure proper assembly and to avoid any potential issues.**

**Recommendations Before Beginning Assembly:**
1. Read instructions, cover to cover
2. Check that you have all the necessary tools listed in the instruction manual.
3. Assemble on a clean non-marring surface.
4. Have at least 2-3 adults on hand for assembly.
5. Save all packaging until finished.
6. Keep small parts and tools away from children.

**Assembly Notice:**
- Lay out all the parts and hardware in an organized manner.
- Identify each part and match them with the corresponding labels in the manual.
- Assemble the product in the sequence specified to ensure stability.
- Do not overtighten screws during assembly as it may damage the parts or strip the threads.
- Double-check each step before proceeding to the next one.
- When you have completed assembly, we suggest you have more than one person to assist you with lifting and placing the product.

**** What should you do when you encounter problems?Don't Worry—We'll Take Care of Everything!**
If you encounter any difficulties (e.g., missing parts, damaged parts, unsuccessful assembly, etc.) during assembly, do not hesitate to contact the seller directly. The after-sales team will get back to you within 24 hours.

- If the product is damaged or missing any components, we are happy to provide replacement parts or a new product at no cost to you.
- To assist us in resolving your issue quickly, please contact our support team and provide clear photos of the damaged item or missing parts. This will help us identify the problem accurately and ensure a prompt solution. √√

**** Return Policy**
IMPORTANT NOTICE: Dear, If you encounter any issues with the product (quality-related or otherwise) that may require a refund or exchange, there is no need to initiate a return immediately. Please contact the seller directly, and in most cases, we can resolve the issue without requiring you to return the item. Thank you!

We hope these instructions help you successfully assemble the product. If you have any further questions or concerns, please feel free to contact the seller for assistance. Enjoy your new furniture!

**WARNUNG**

Bei unerwarter Montage oder Verwendung können schwere oder tödliche Verletzung auftreten.

1. Legen Sie in den Montageprozess alle Teile weg von Babys oder Kindern.

2.Stellen Sie sicher,dass der gebohrte Wandbereich frei von verborgenen Stromkabeln,Wasser-und Gasleitungen ist, wenn Sie dieses Produkt an der Wand befestigen.

3. Die Verwendung von kippsicherungen kann die Gefahr eines Kippens nur verringern,jedoch nicht beseitigen.

4. Setzen Sie bitte keine schweren Gegenstände auf dieses Produkt, es sei denn, dass das Produkt speziell fur die Unterbringung konzipiert wird.

5. Legen Sie bitte die schwersten Gegenstände auf das unterste Regal.

6. Erlauben Sie nie Kindern, auf Schubladen, Turen oder Regale zu klettern oder zu knallen.

# Parts List

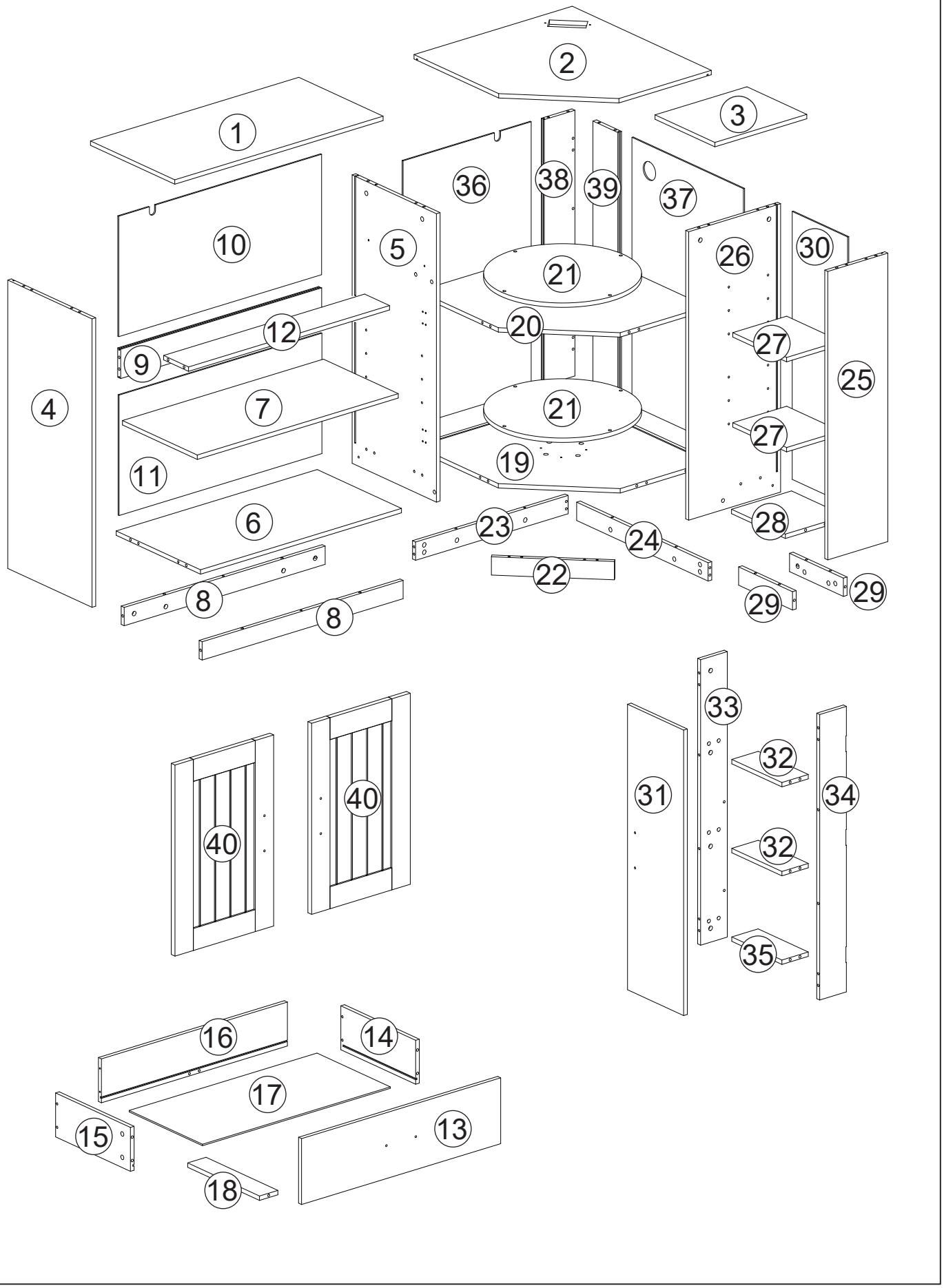
1
2
3
4
5
6
7
8
8
9
10
11
12
16
14
17
15
13
18
36
38
39
37
21
20
21
19
23
24
22
26
30
27
25
27
28
29
29
40
40
33
32
31
34
32
35

# Parts List

| | | |
|---|---|---|
| 1 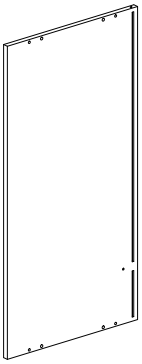 x1 | 2 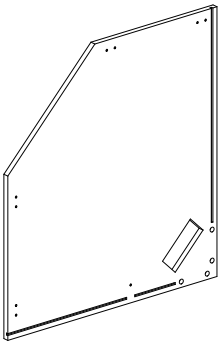 x1 | 3 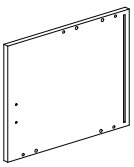 x1 |
| 4 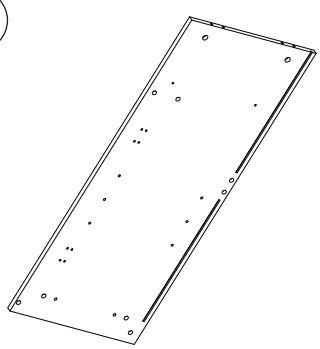 x1 | 5 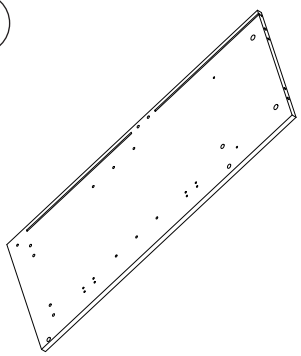 x1 | 6 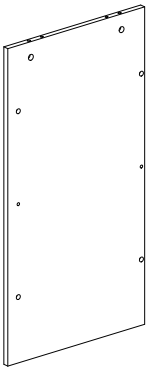 x1 |
| 7 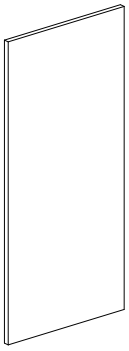 x1 | 8  x2 | 9  x1 |
| 10 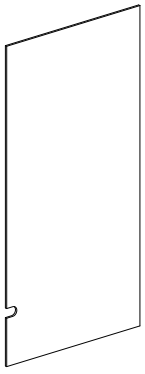 x1 | 11 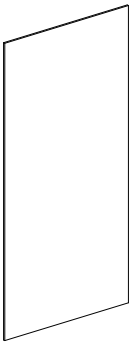 x1 | 12 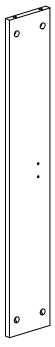 x1 |
| 13 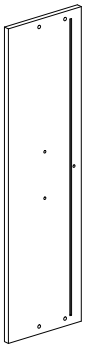 x1 | 14  x1 | 15 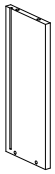 x1 |

# Parts List

| | | |
|---|---|---|
| 16  x1 | 17 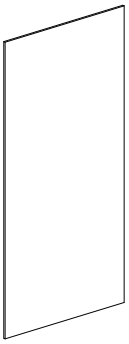 x1 | 18  x1 |
| 19 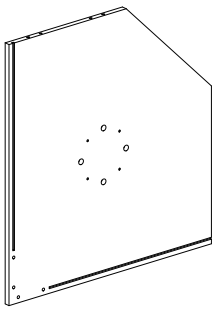 x1 | 20 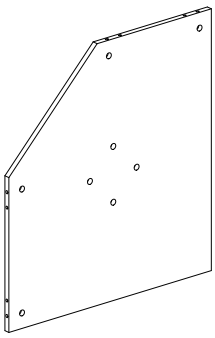 x1 | 21 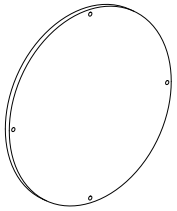 x2 |
| 22  x1 | 23  x1 | 24  x1 |
| 25 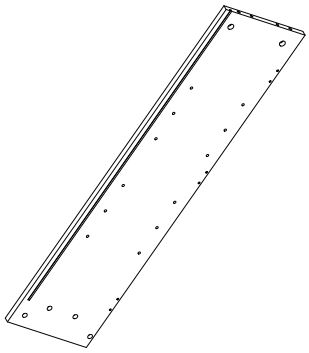 x1 | 26 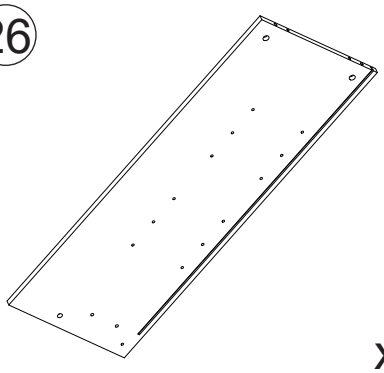 x1 | 27 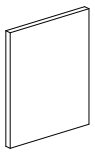 x2 |
| 28 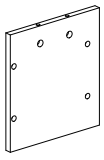 x1 | 29  x2 | 30 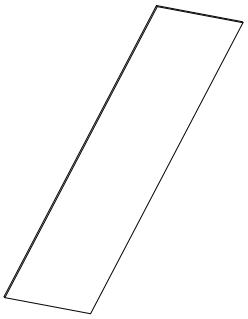 x1 |

# Parts List

| | | |
|---|---|---|
| 31 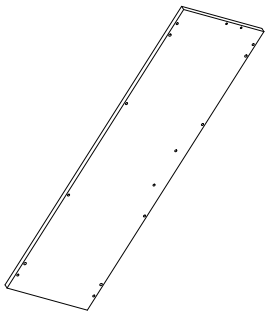 x1 | 32 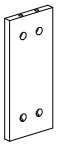 x2 | 33 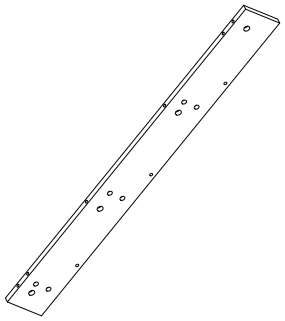 x1 |
| 34 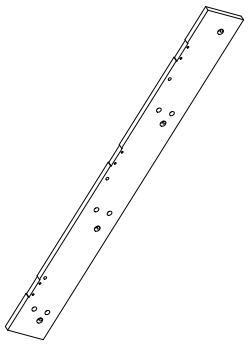 x1 | 35 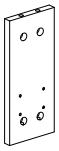 x1 | 36 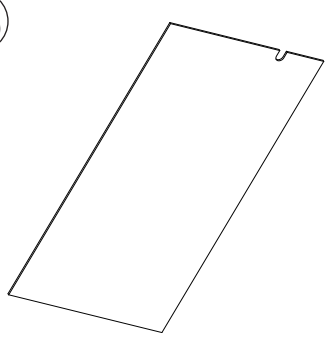 x1 |
| 37 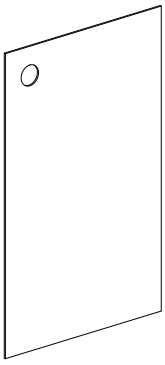 x1 | 38 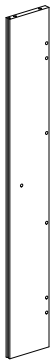 x1 | 39 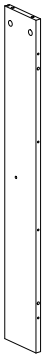 x1 |
| 40 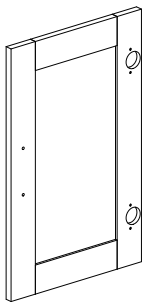 x2 | | |
| | | |

# Hardware List

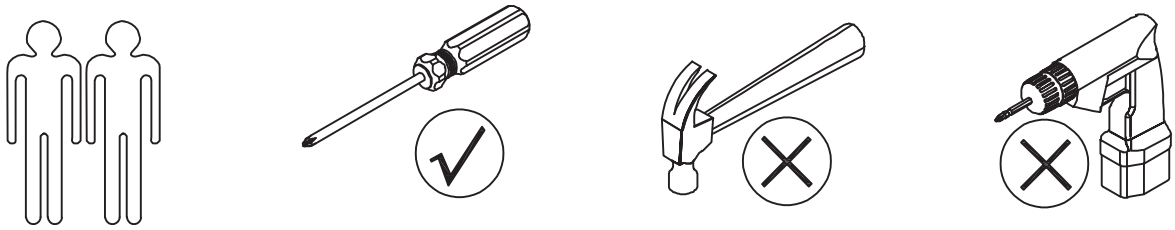

| | | | | |
|---|---|---|---|---|
| A 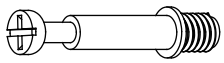 Ø6x40 58PCS | B 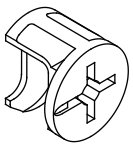 Ø12x10 81PCS | C 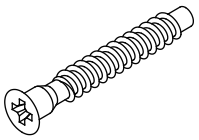 M5x40 24PCS | D 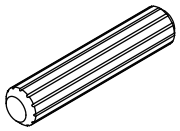 Ø6x40 30PCS | E 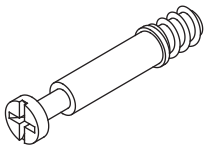 Ø6x40 23PCS |
| F 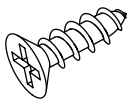 M3.5x12 76PCS | G 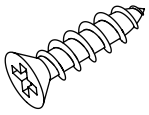 M3.5x14 38PCS | H 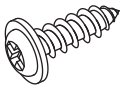 M3.5x12 4PCS | I 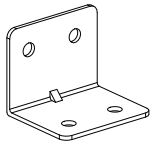 4PCS | J 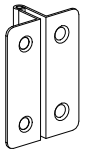 3PCS |
| K 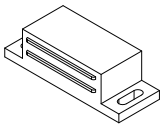 1PC | L  1PC | M 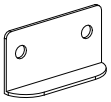 1PC | N  4PCS | O  M4x18 4PCS |
| P  M4x16 4PCS | Q  12PCS | R 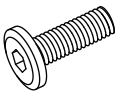 M6x20 8PCS | S 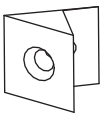 28PCS | T  M4 1PC |
| U 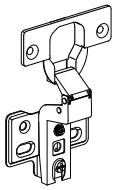 4PCS | V 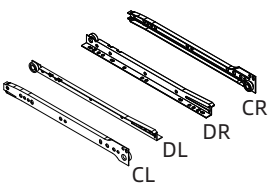  300x30 1PC | W 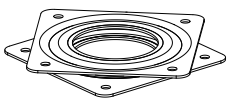 2PCS | X 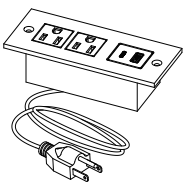 1PC | Y 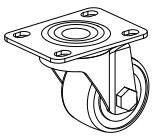 1PC |

# Hardware List

| | | | | |
|---|---|---|---|---|
| Z 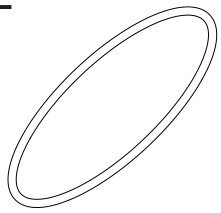 2PCS | A1  8PCS | B1  8PCS | C1 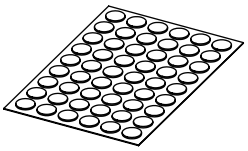 Ø21 1PC | D1 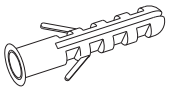 M6x30 2PCS |
| E1 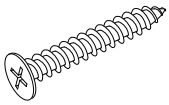 M4x40 2PCS | F1 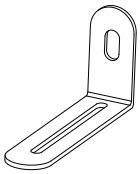 2PCS | G1 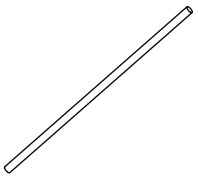 ø5 3PCS | | |
| | | | | |
| | | | | |
| | | | | |
| | | | | |

# CAM BOLT INSTALLATION AS BELOW:

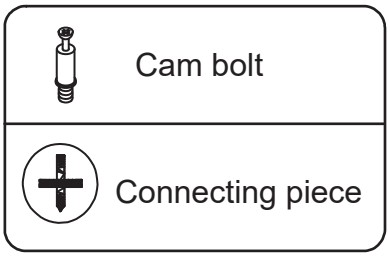





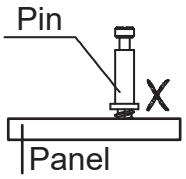


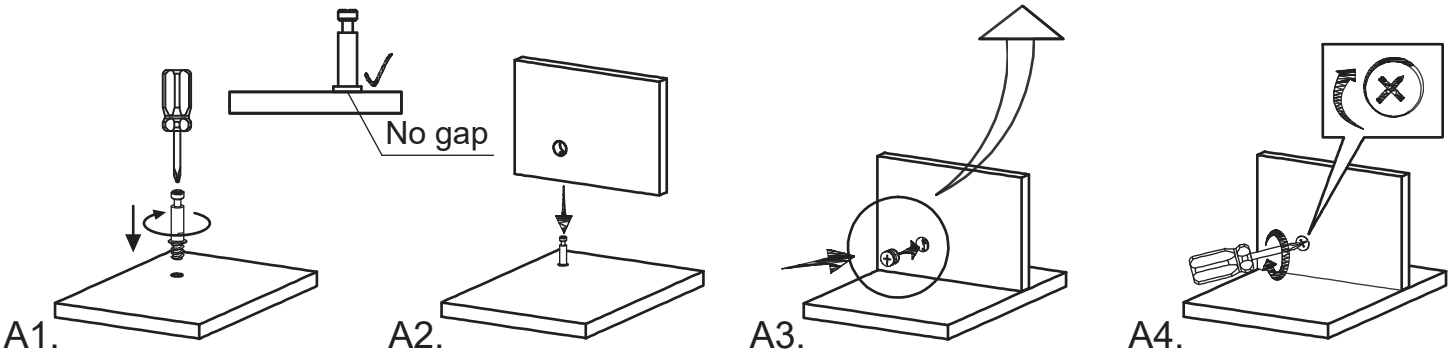


EN

After opening the packaging, please lay the foam in the packaging flat on the ground to place the boards, to prevent them from being damaged by collision.

DE

Nachdem Sie die Verpackung geöffnet haben, legen Sie bitte den Schaumstoff auf den Boden, um die Platten vor Beschädigungen zu schützen.

# Assembly

## 1

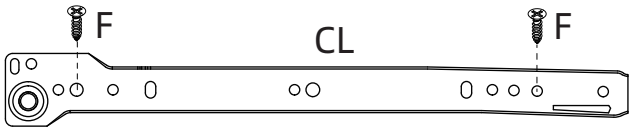


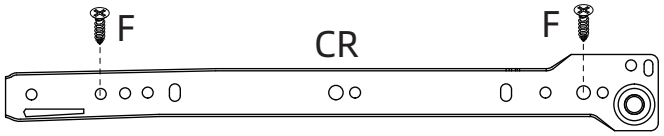


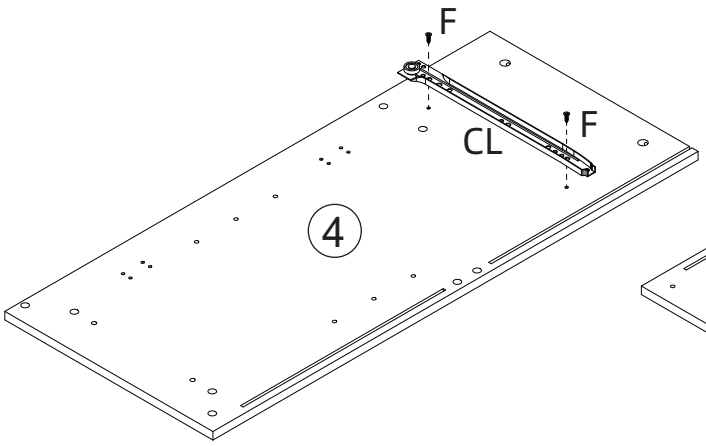


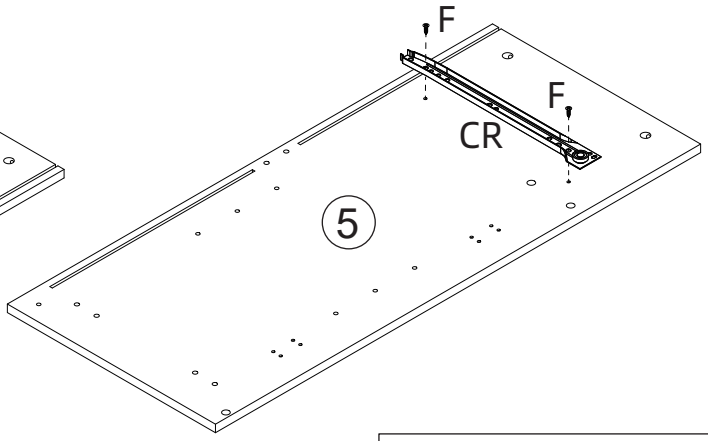


| | | |
|---|---|---|
| V | 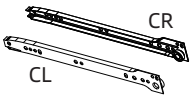  | x1 |
| F |  | x4 |

## 2

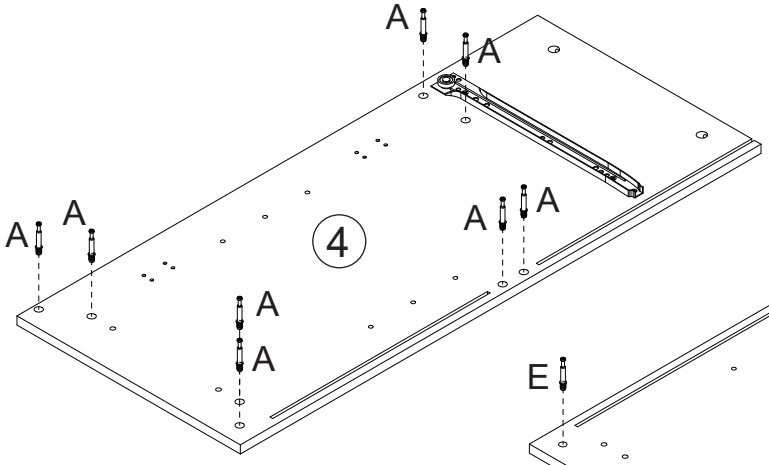


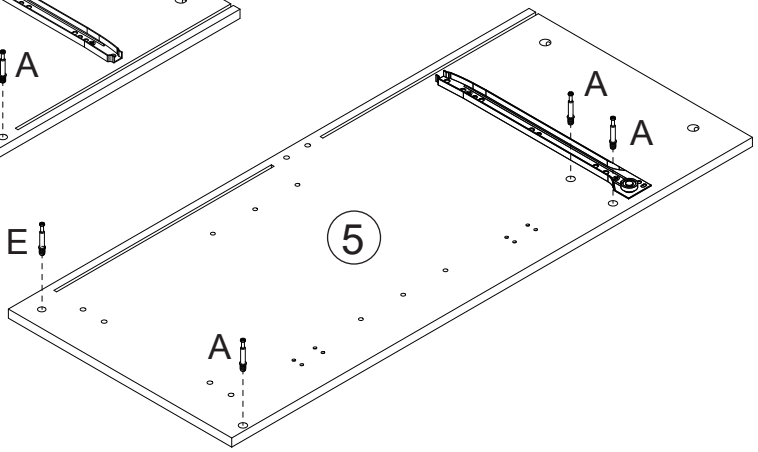


| | | |
|---|---|---|
| E | 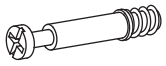 | x1 |
| A | 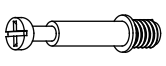 | x11 |

# Assembly

## 3

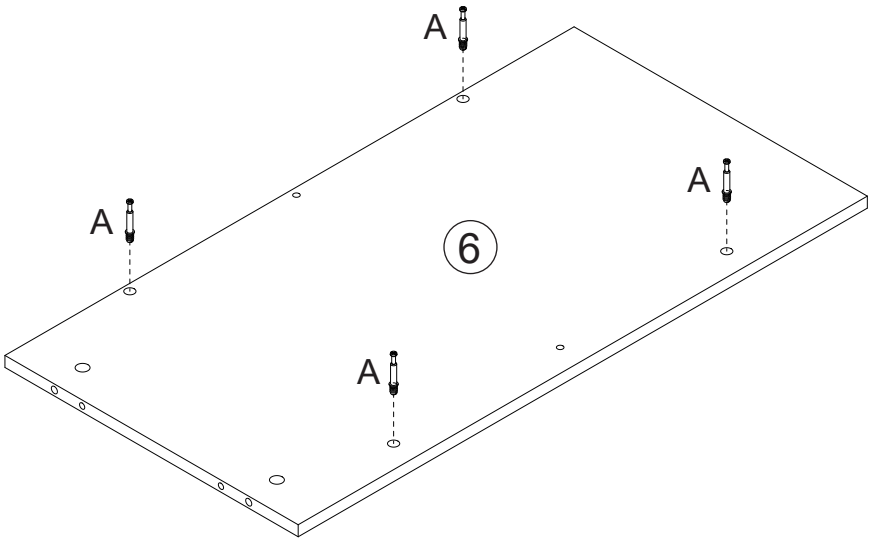


| | | |
|---|---|---|
| A | 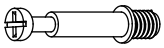 | x4 |

## 4

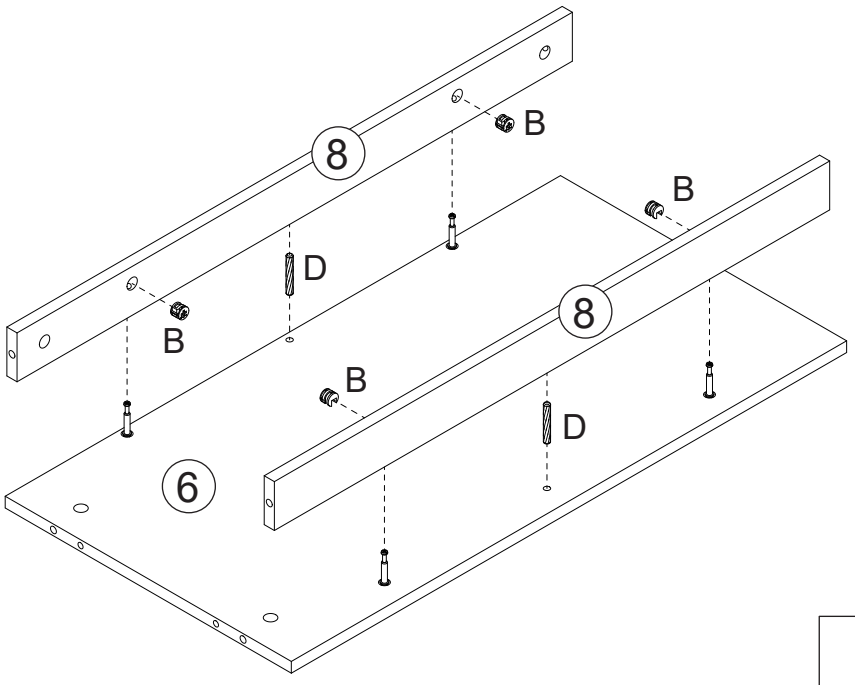


| | | |
|---|---|---|
| B |  | x4 |
| D |  | x2 |

# Assembly

## 5

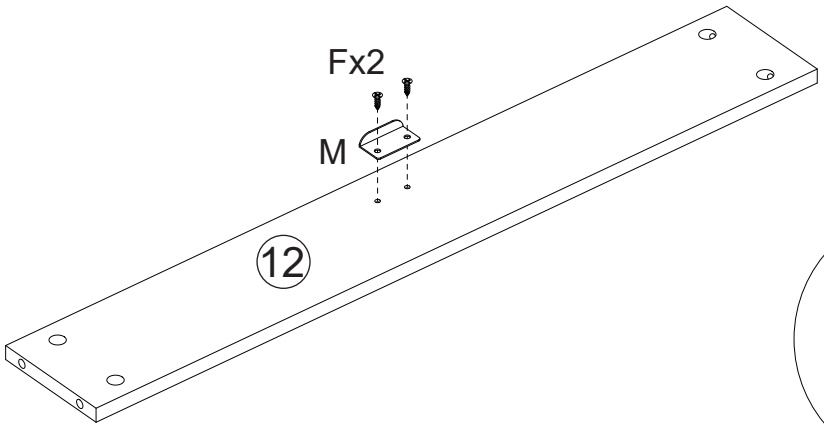


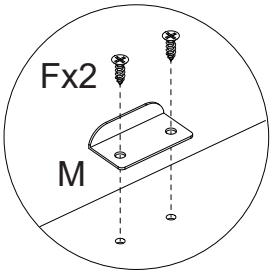


| | | |
|---|---|---|
| M |  | x1 |
| F | 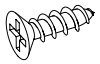 | x2 |

## 6

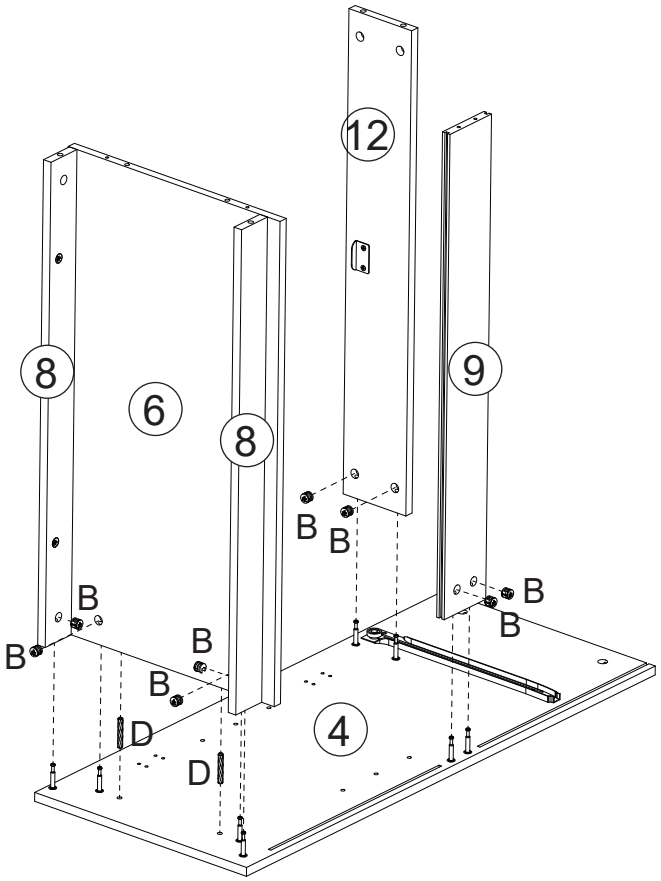


| | | |
|---|---|---|
| B |  | x8 |
| D |  | x2 |

# Assembly

## 7

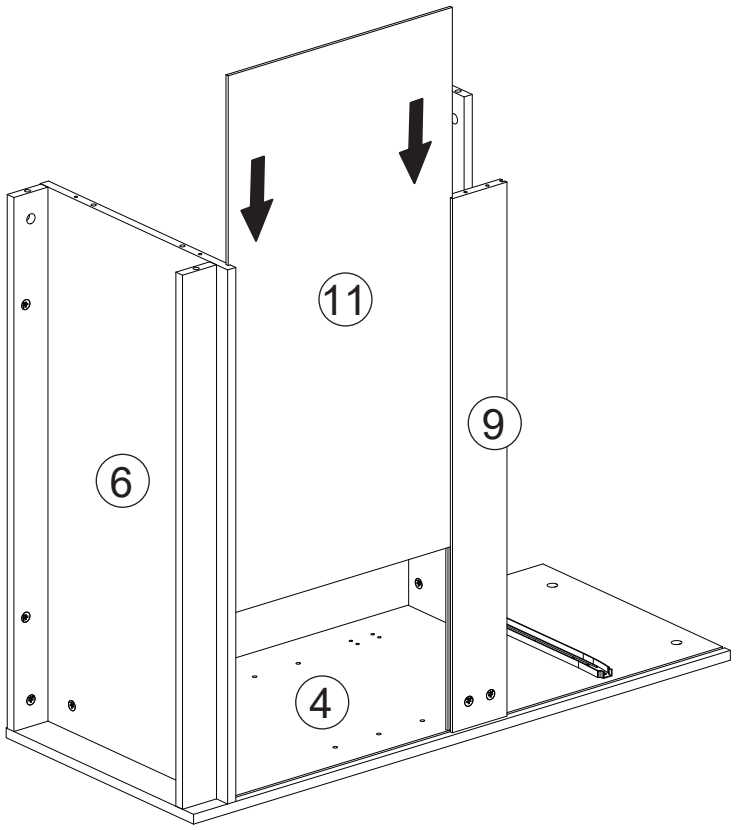


## 8

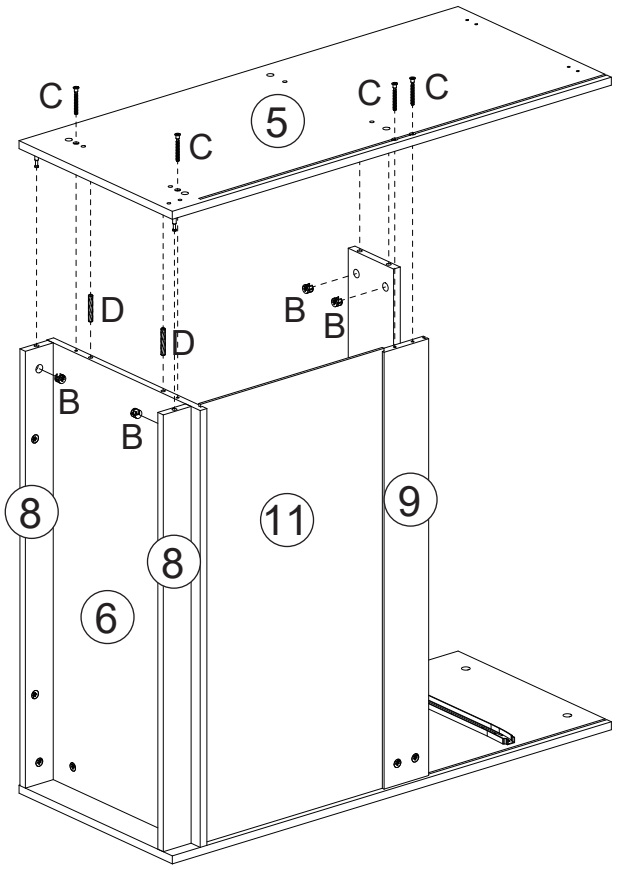


| | | |
|---|---|---|
| C | 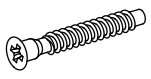 | x4 |
| B |  | x4 |
| D |  | x2 |

# Assembly

## 9

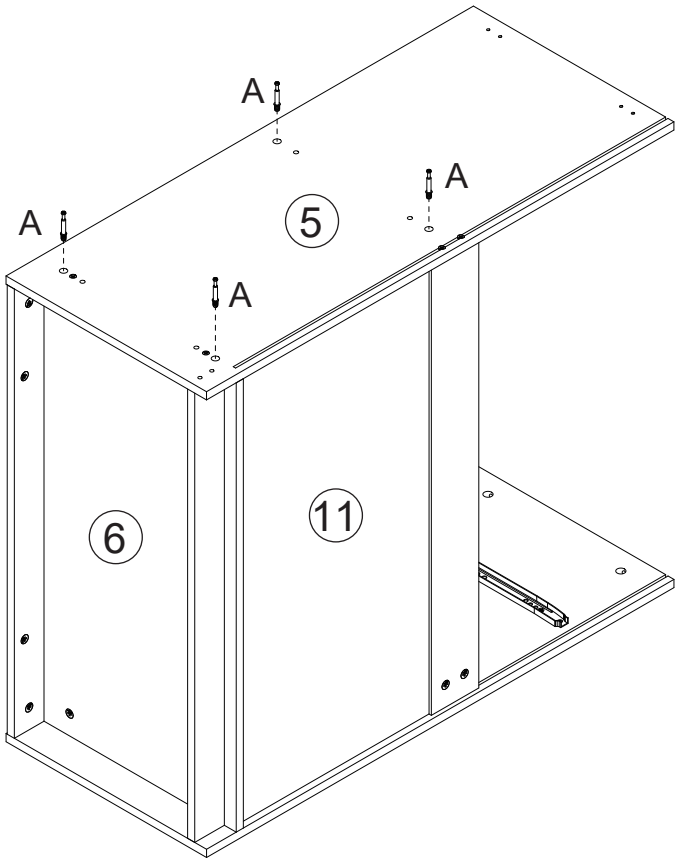


A 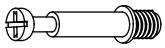 x4

## 10

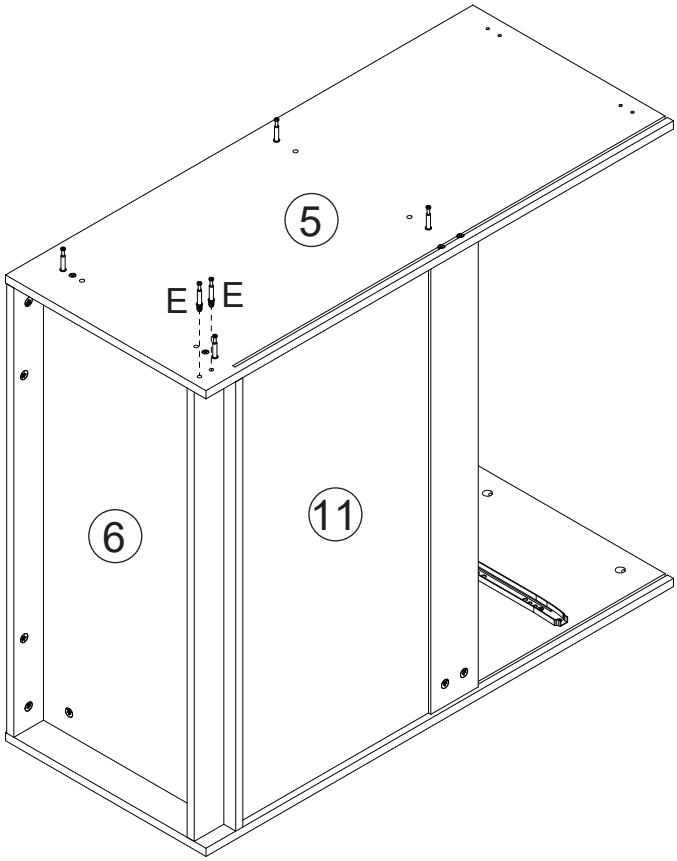


E 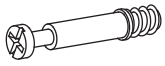 x2

# Assembly

## 11

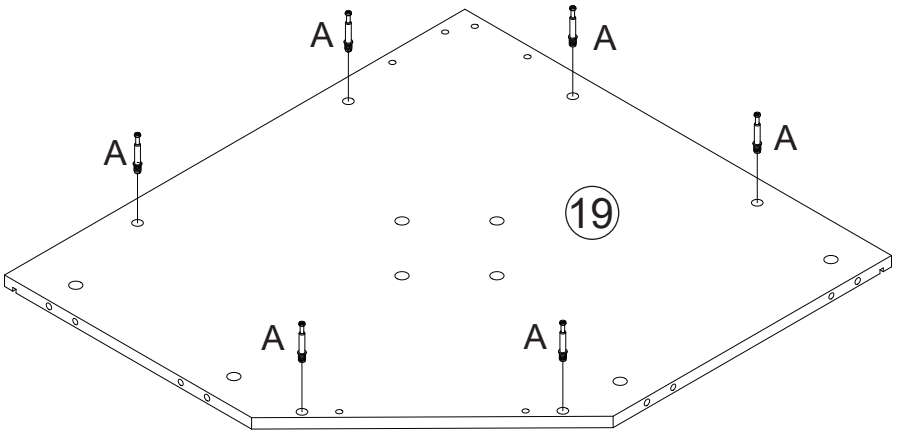


A 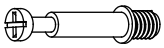 x6

## 12

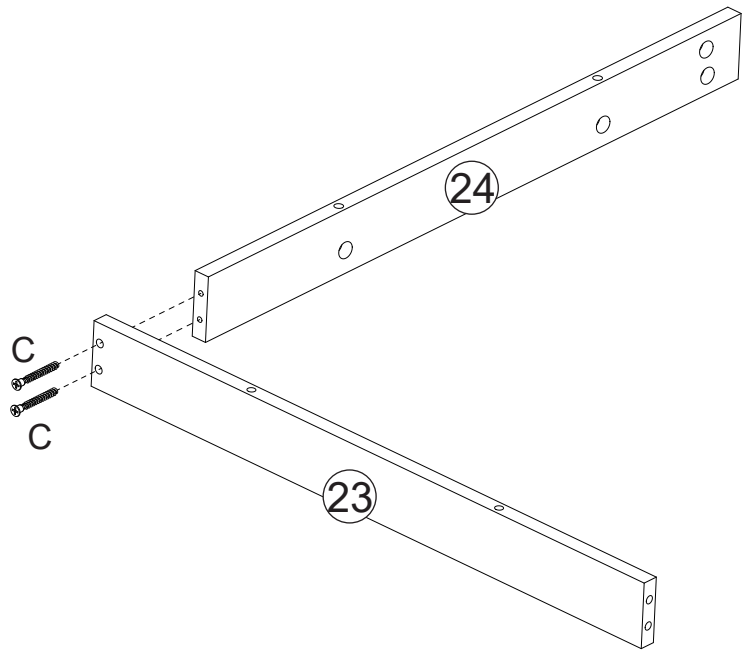


C 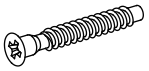 x2

# Assembly

## 13

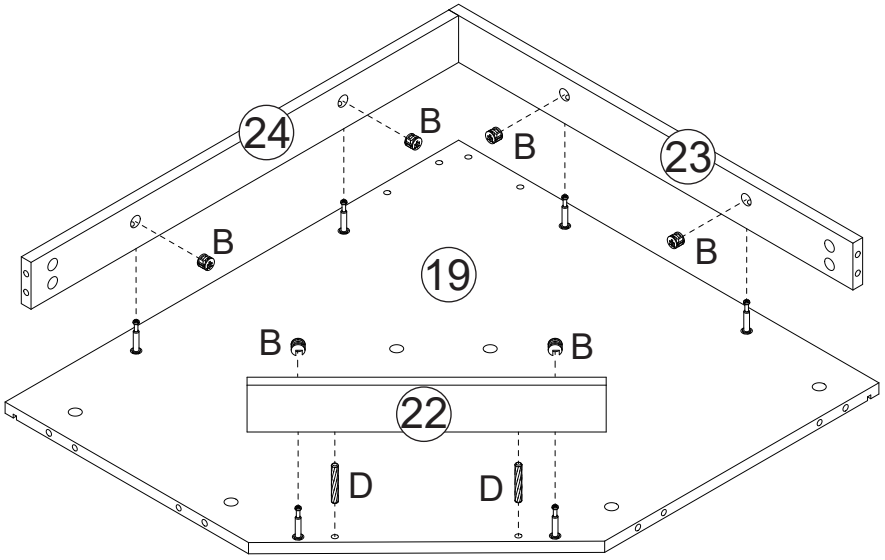


| | | |
|---|---|---|
| B |  | x6 |
| D |  | x2 |

## 14

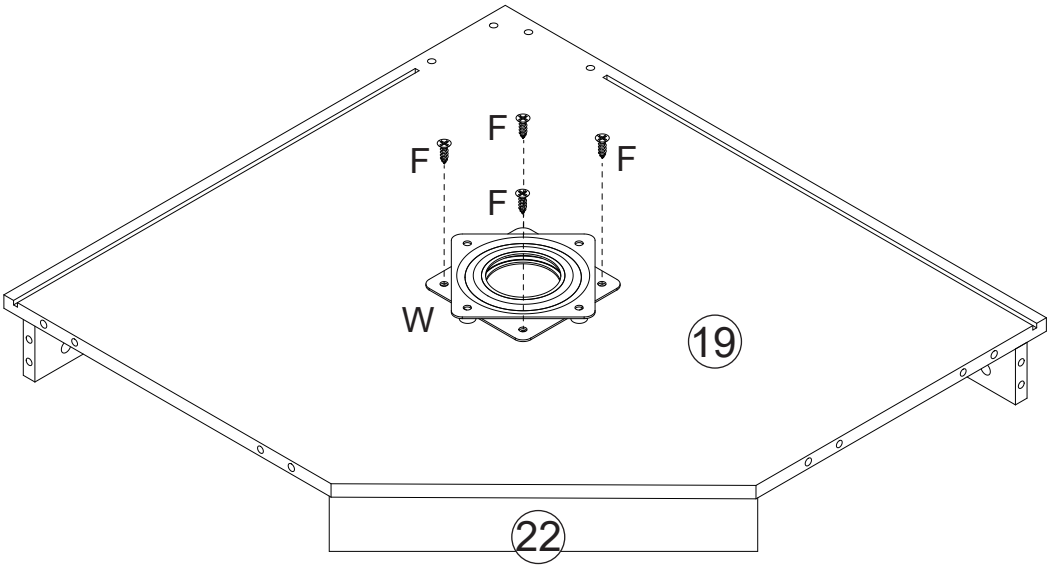


| | | |
|---|---|---|
| W |  | x1 |
| F |  | x4 |

## 15

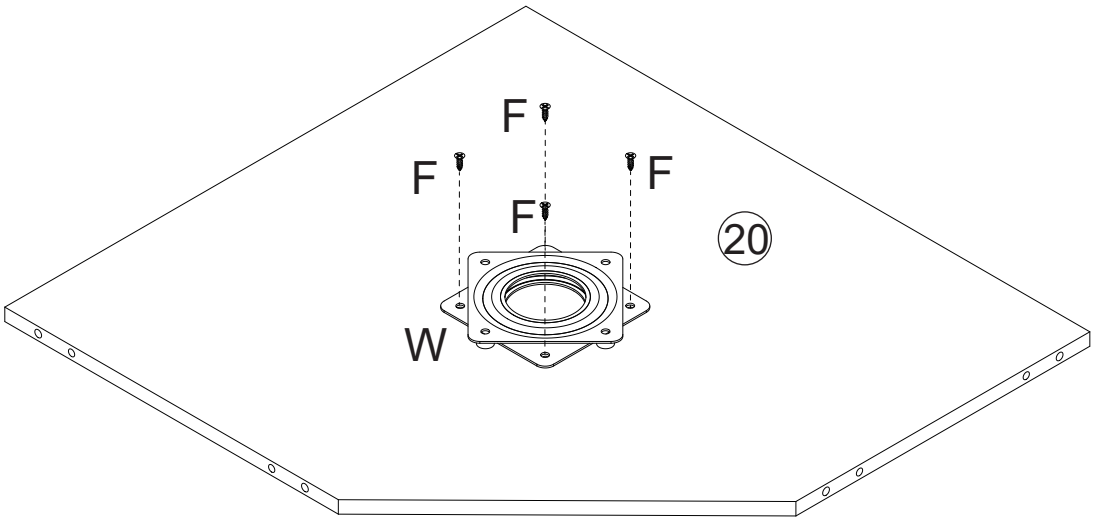


| | | |
|---|---|---|
| W |  | x1 |
| F | 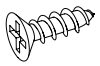 | x4 |

## 16

x2

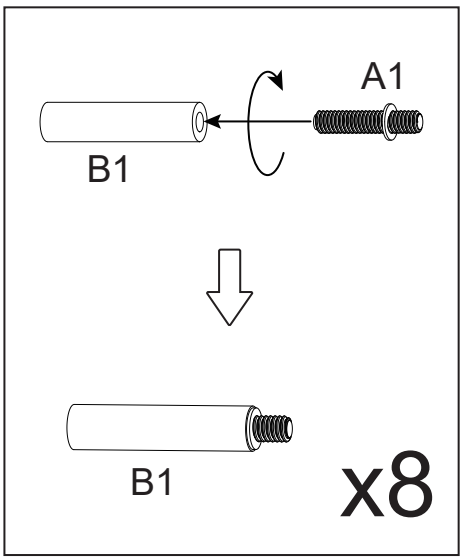


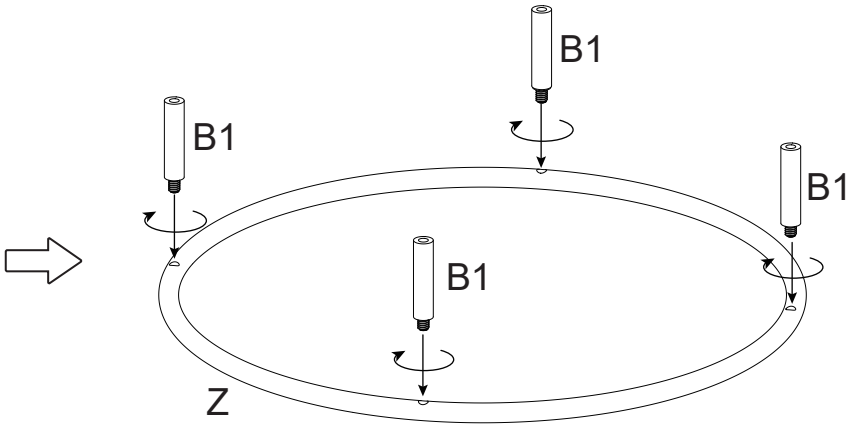


| | | |
|---|---|---|
| Z |  | x2 |
| A1 |  | x8 |
| B1 |  | x8 |

# Assembly

## 17

x2

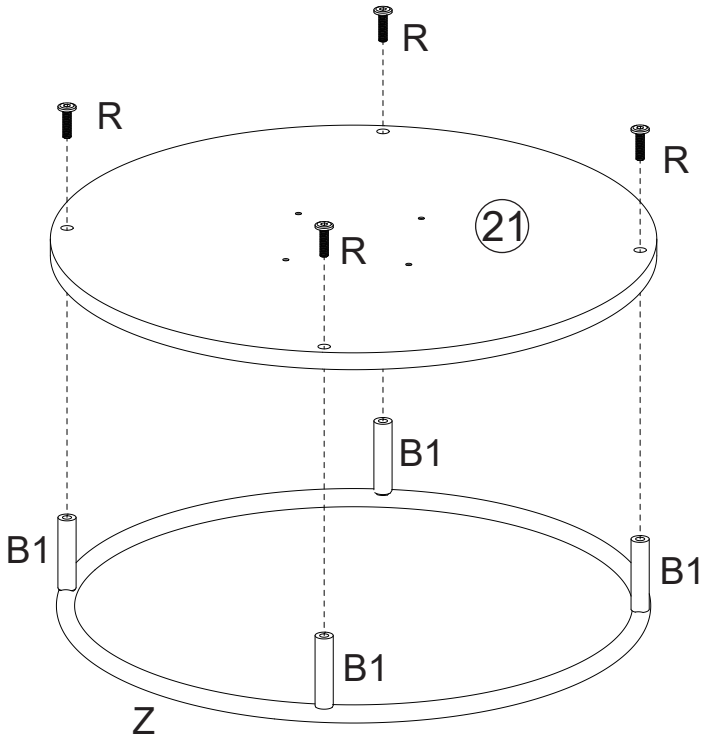


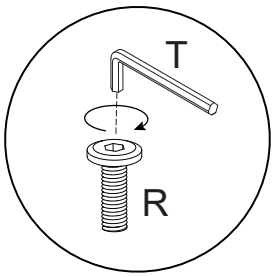


| | | |
|---|---|---|
| T |  | x1 |
| R | 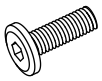 | x8 |

## 18

Please pass the screw (F) through the large hole in the wooden board (20), and then fix it to the wooden board (21).

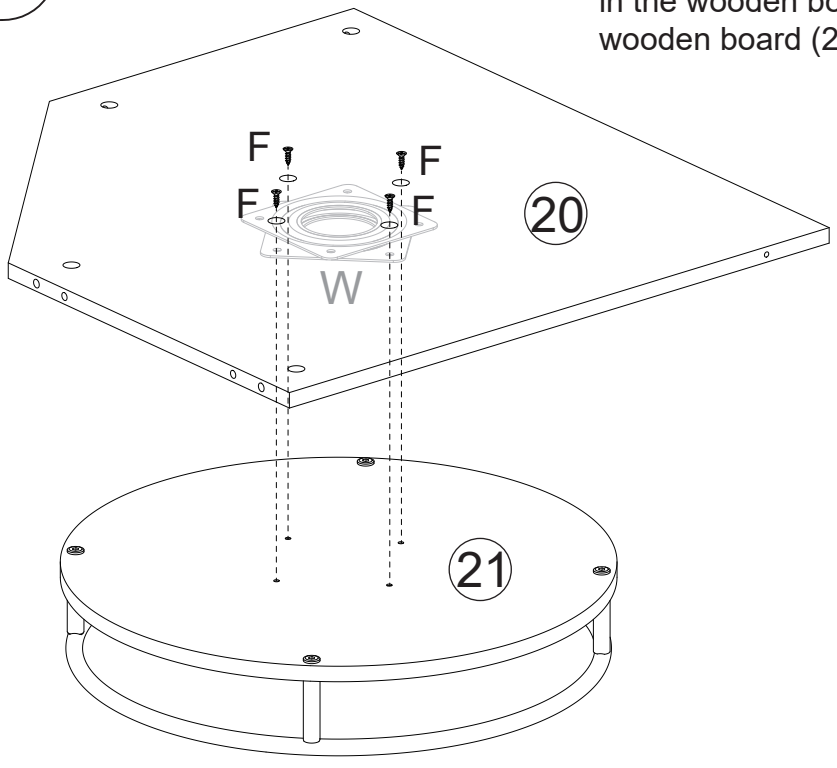


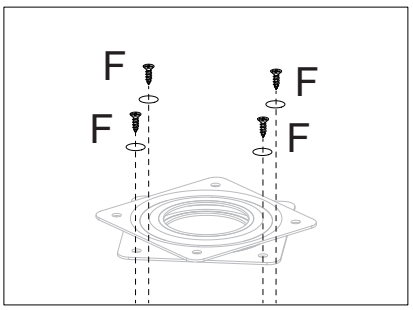


| | | |
|---|---|---|
| F |  | x4 |

# Assembly

## 19

Please pass the screw (F) through the large hole in the wooden board (19), and then fix it to the wooden board (21).

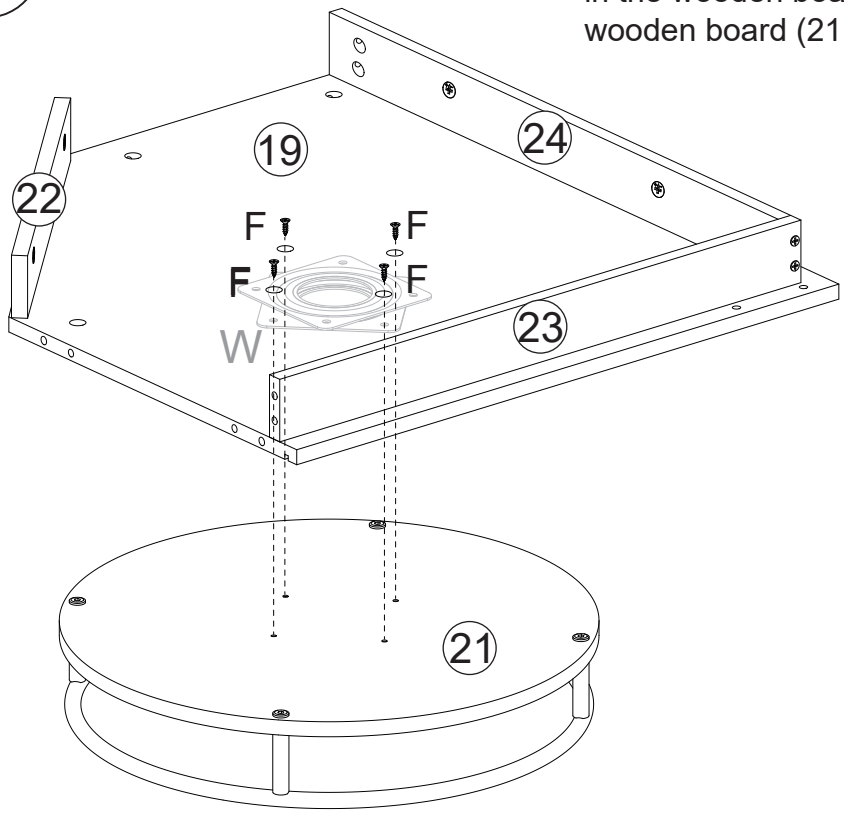


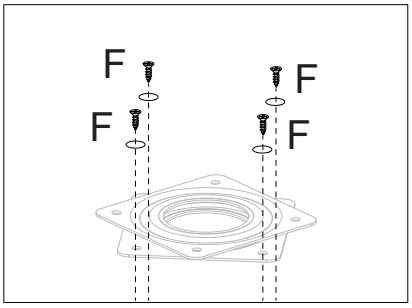


| | | |
|---|---|---|
| F |  | x4 |

## 20

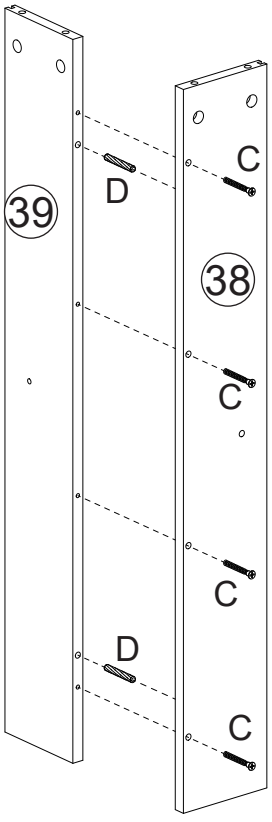


| | | |
|---|---|---|
| C | 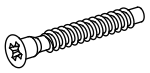 | x4 |
| D |  | x2 |

# Assembly

## 21

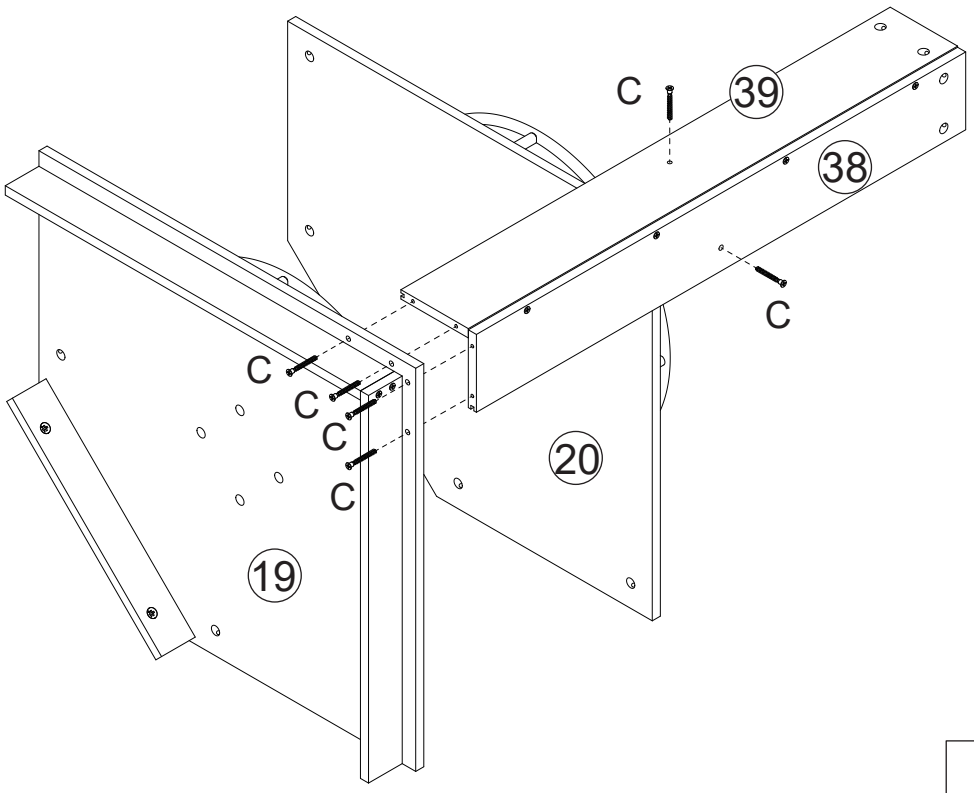




Two adults assemble

| | | |
|---|---|---|
| C | 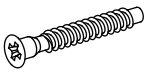 | x6 |

## 22

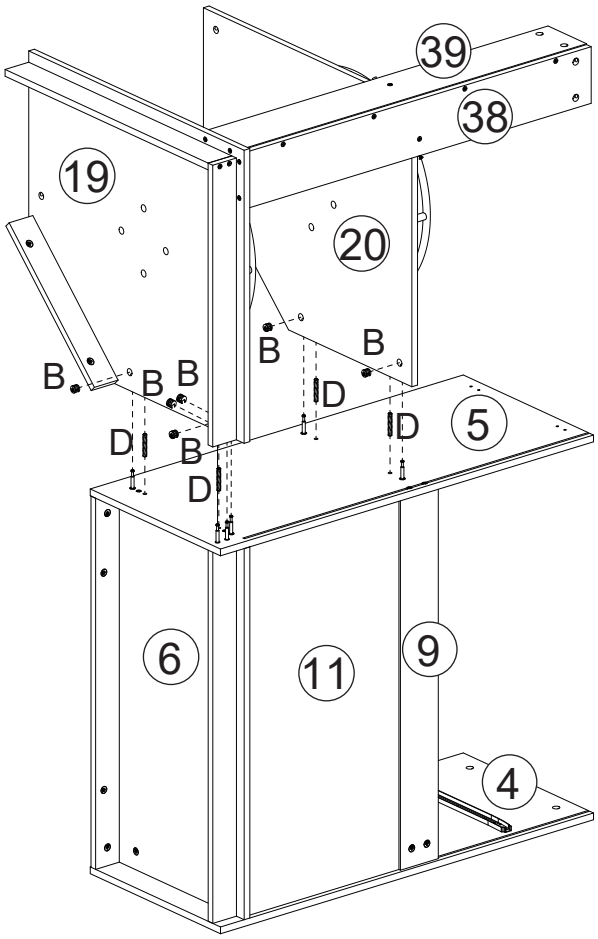


| | | |
|---|---|---|
| B |  | x6 |
| D |  | x4 |

# Assembly

## 23

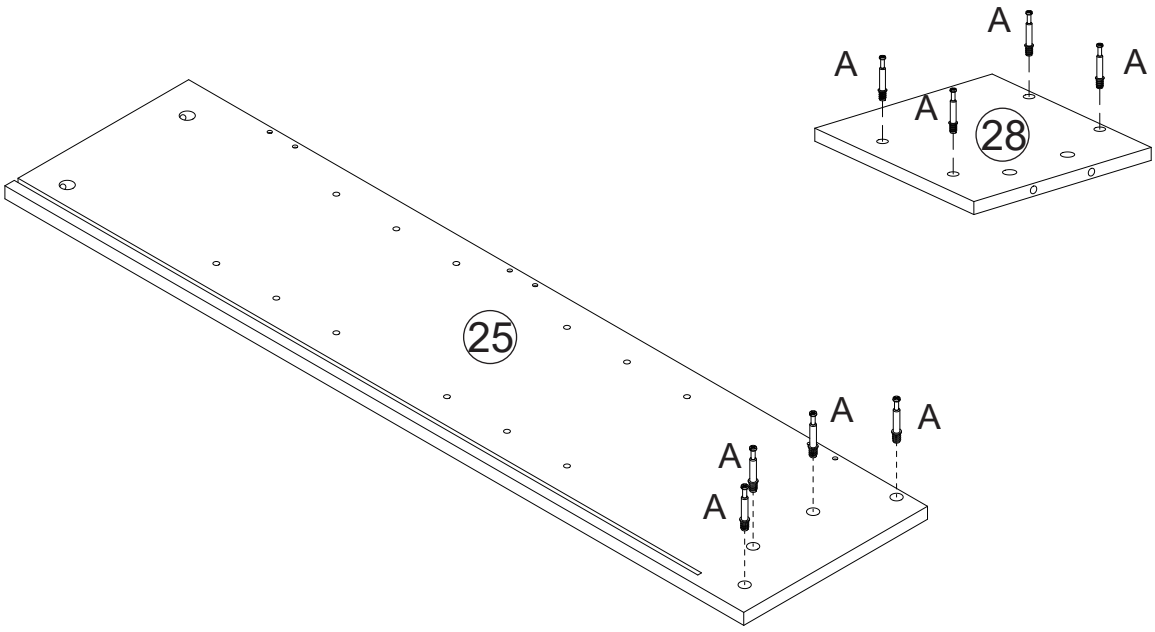


A 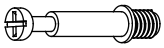 x8

## 24

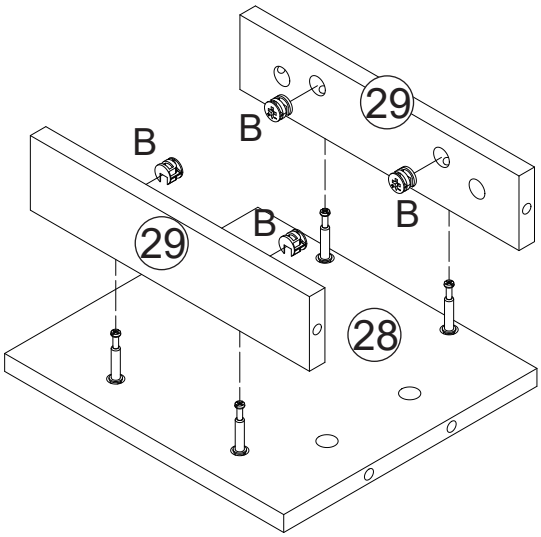


B  x4

# Assembly

## 25

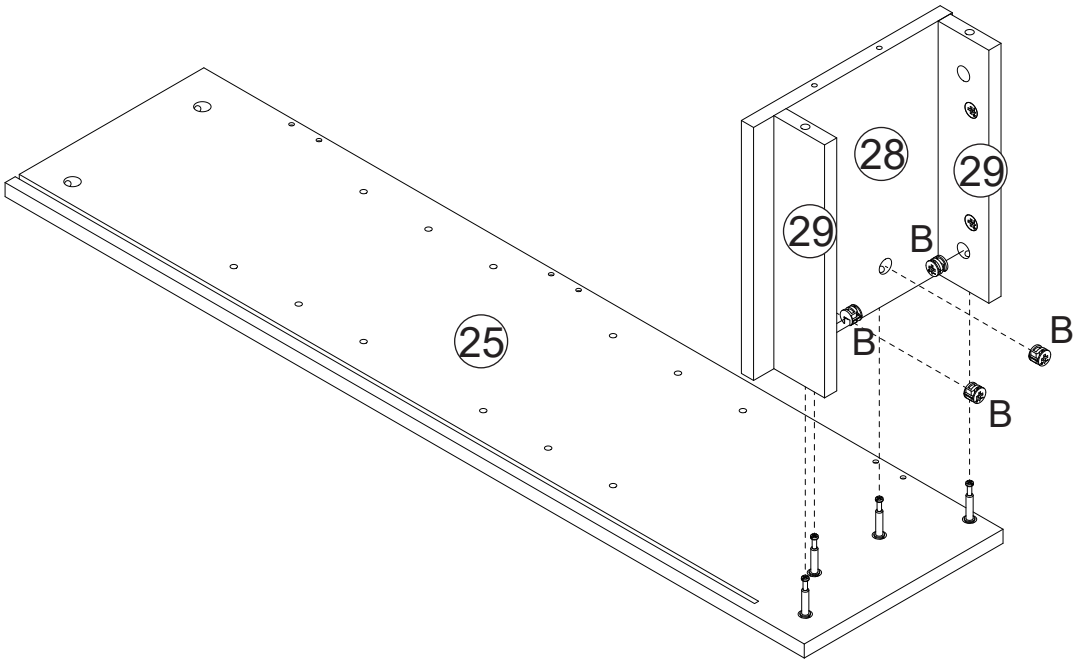


| | | |
|---|---|---|
| B |  | x4 |

## 26

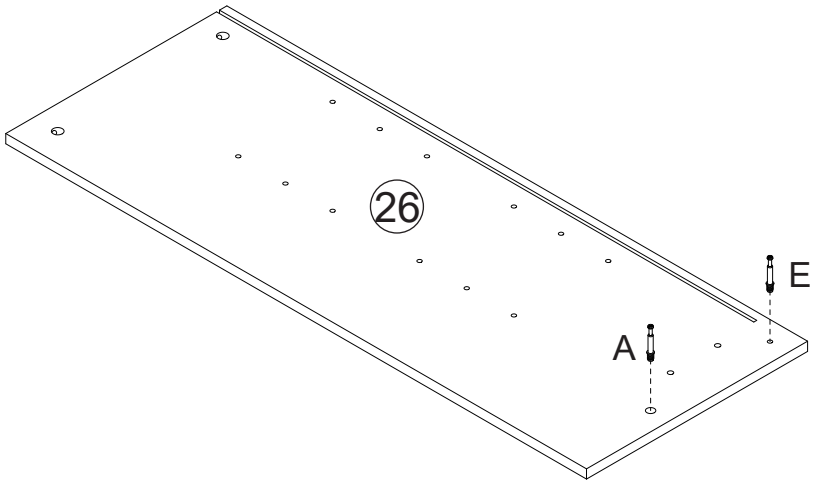


| | | |
|---|---|---|
| E | 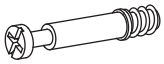 | x1 |
| A | 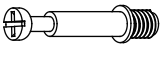 | x1 |

## 27

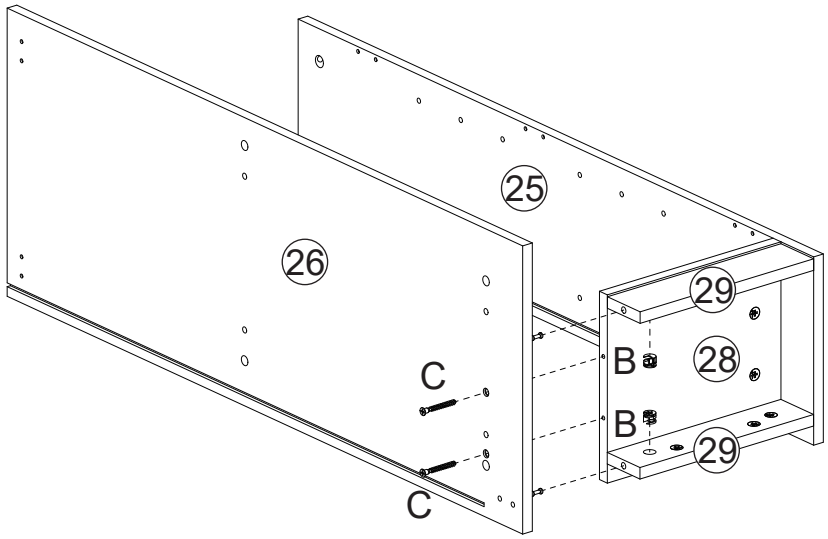


| | | |
|---|---|---|
| C | 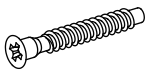 | x2 |
| B |  | x2 |

## 28

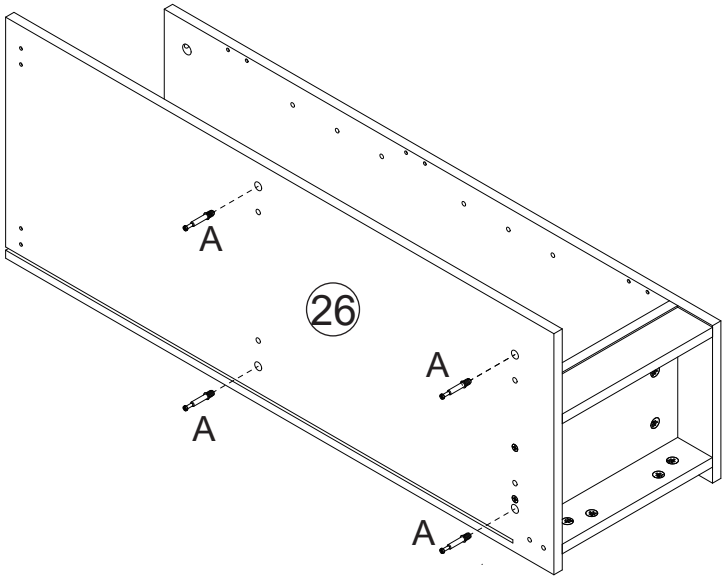


| | | |
|---|---|---|
| A | 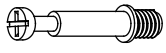 | x4 |

## 29

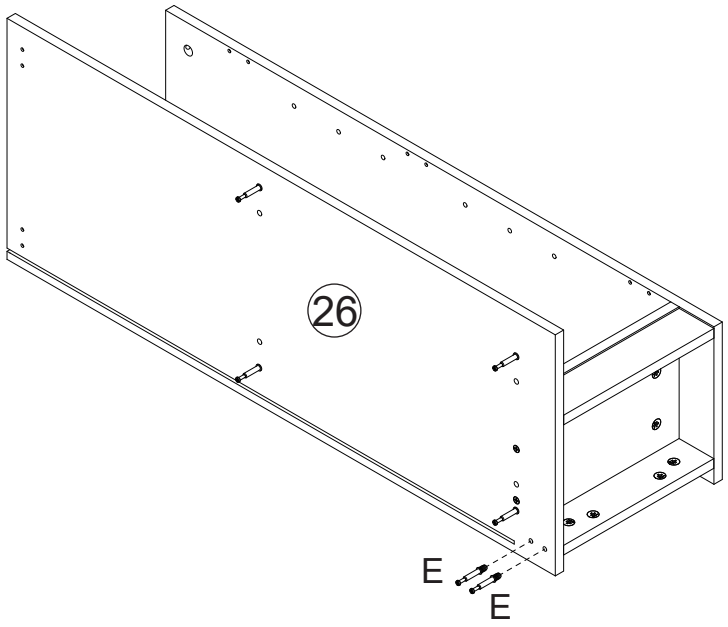


| | | |
|---|---|---|
| E | 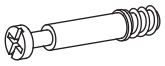 | x2 |

## 30

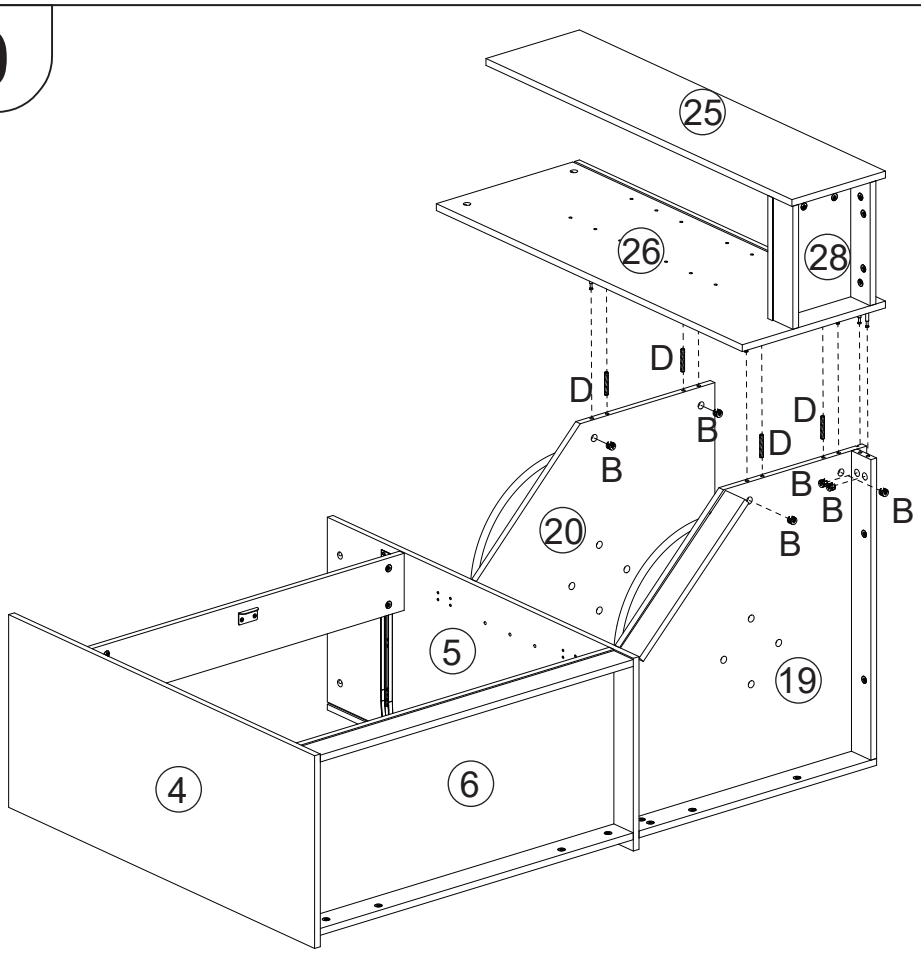


| | | |
|---|---|---|
| B |  | x6 |
| D |  | x4 |

# Assembly

## 31

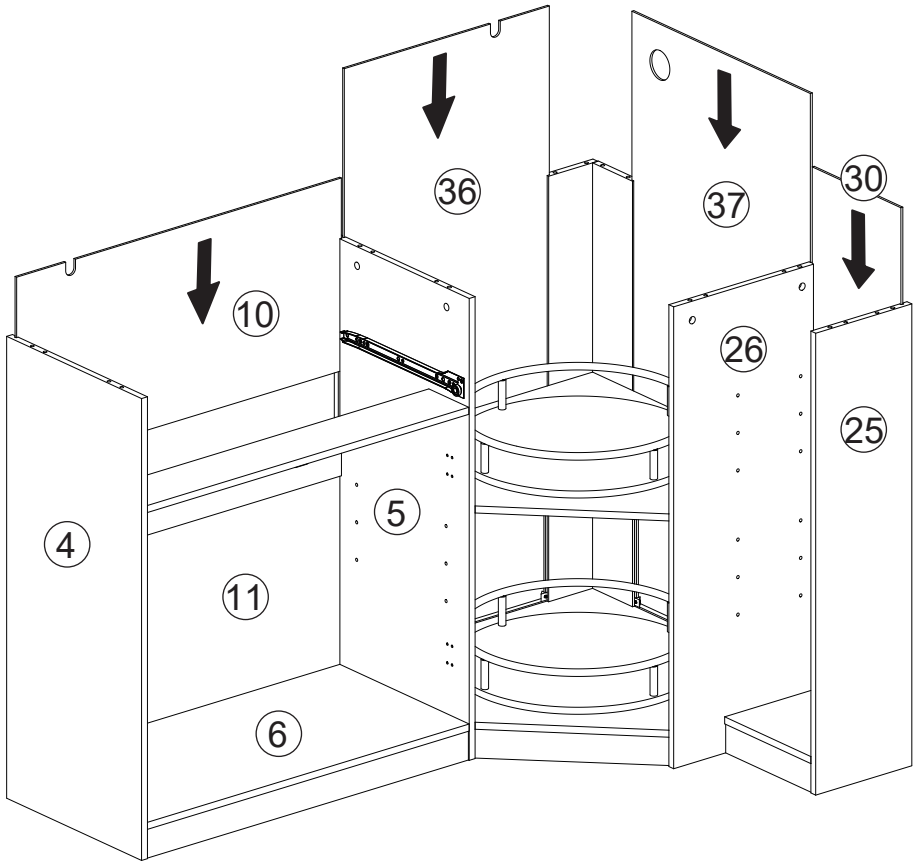


## 32

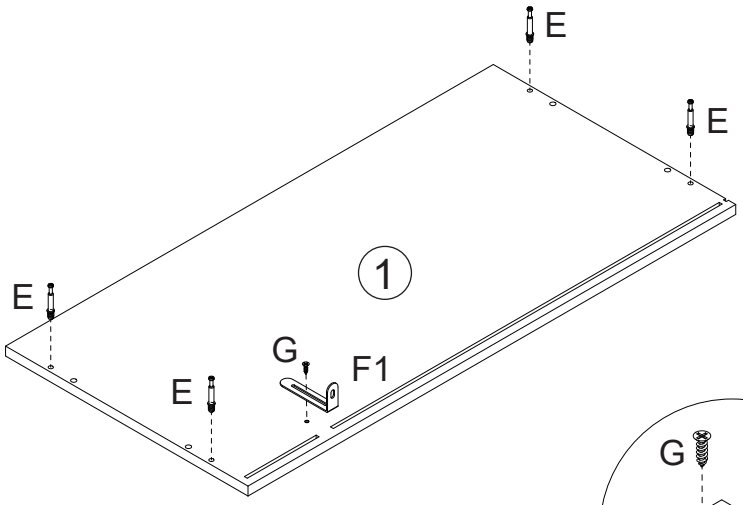


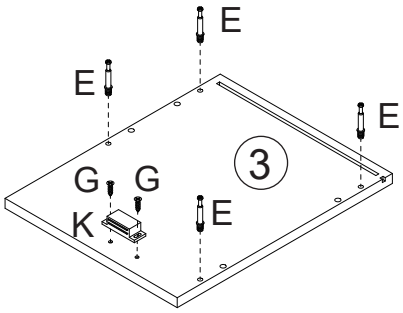


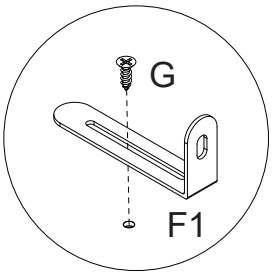


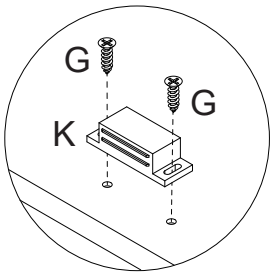


The holes on both sides of the magnetic attachment (M) can be adjusted front and back.

| | | |
|---|---|---|
| F1 |  | x1 |
| K | 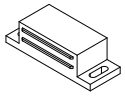 | x1 |
| G | 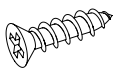 | x3 |
| E | 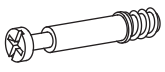 | x8 |

# Assembly

## 33

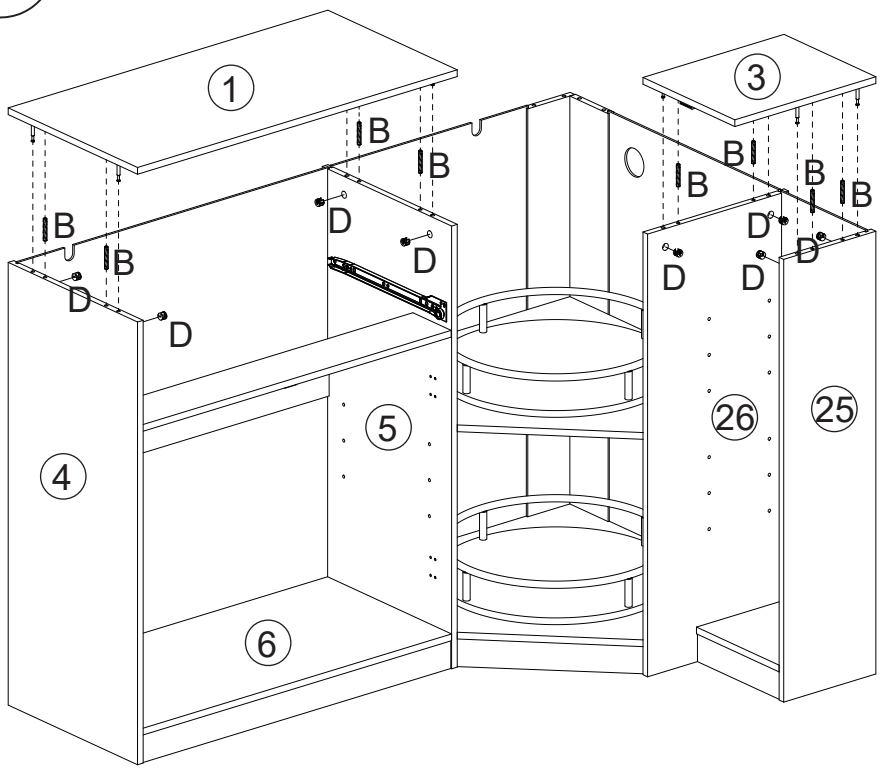


| | | |
|---|---|---|
| B |  | x8 |
| D |  | x8 |

## 34

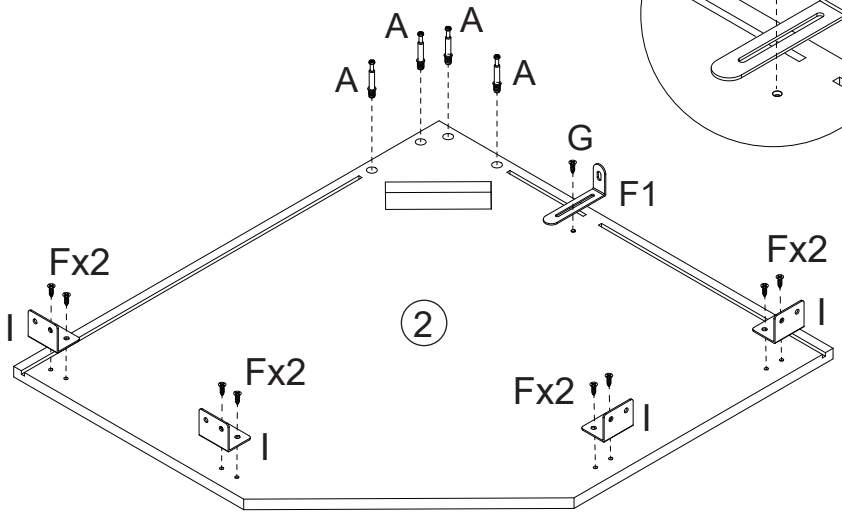


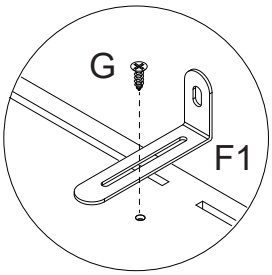


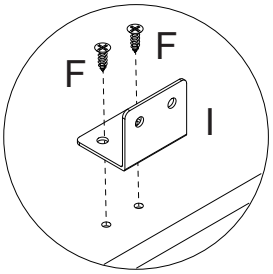


| | | | | | |
|---|---|---|---|---|---|
| A | 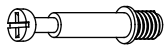 | x4 | | | |
| F1 |  | x1 | I |  | x4 |
| G | 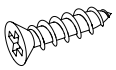 | x1 | F | 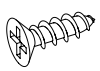 | x8 |

# Assembly

## 35

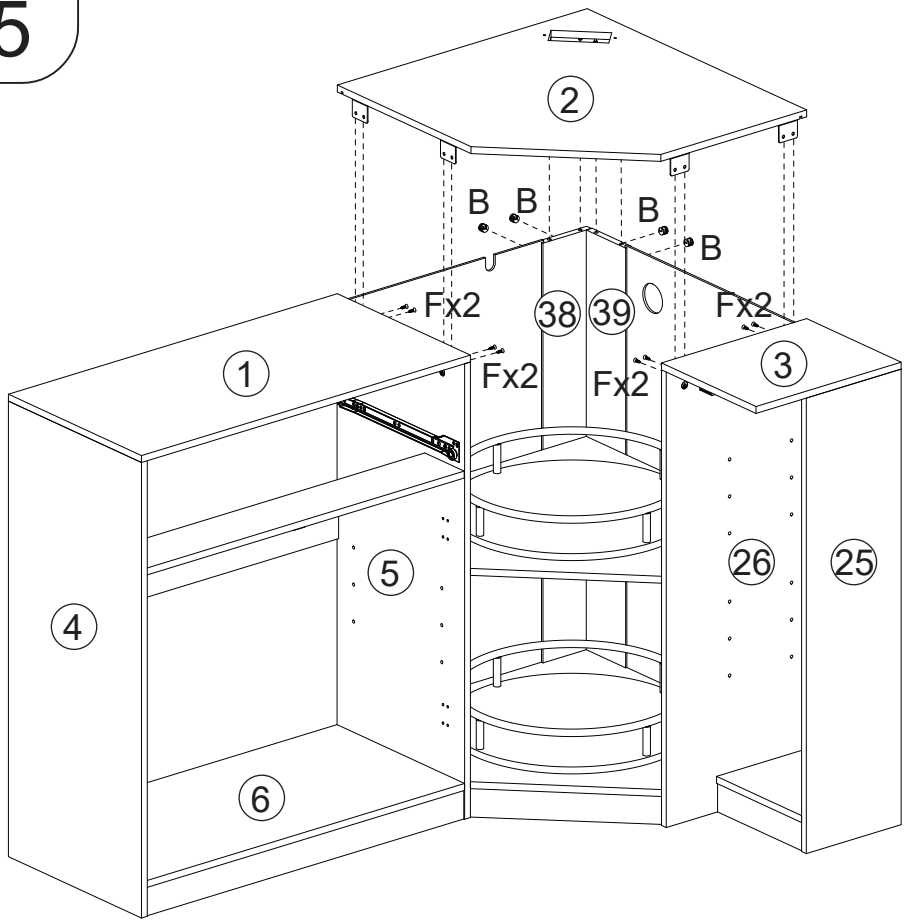


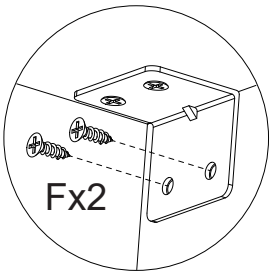


| | | |
|---|---|---|
| B |  | x4 |
| F |  | x8 |

## 36

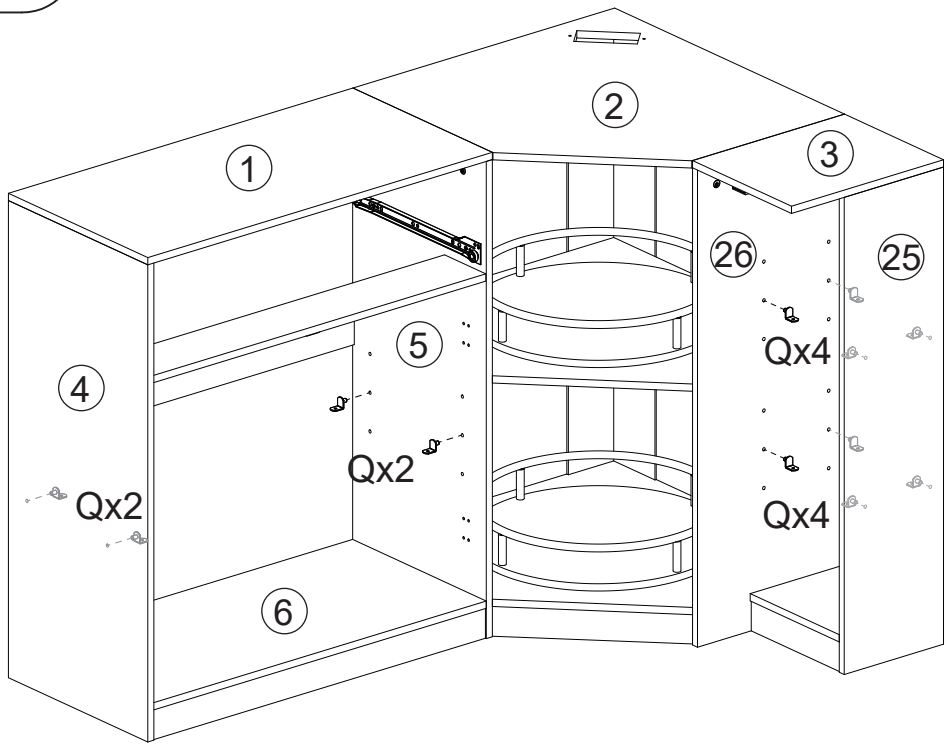


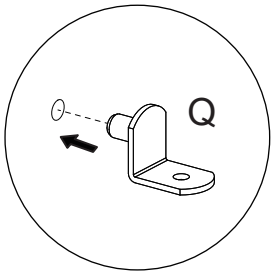


| | | |
|---|---|---|
| Q |  | x12 |

## 37

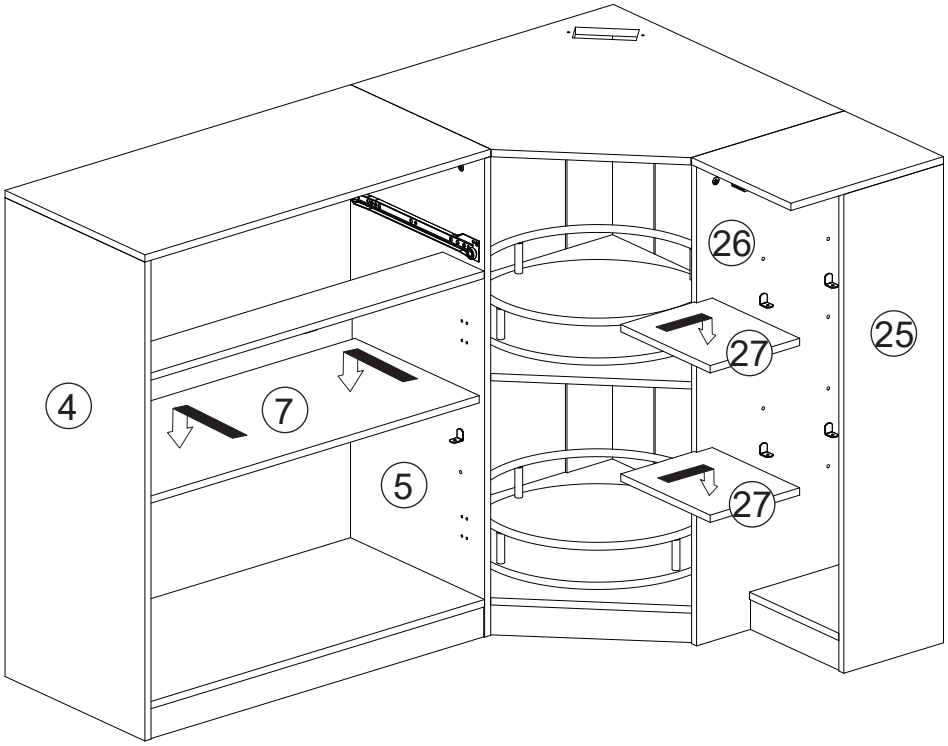


## 38

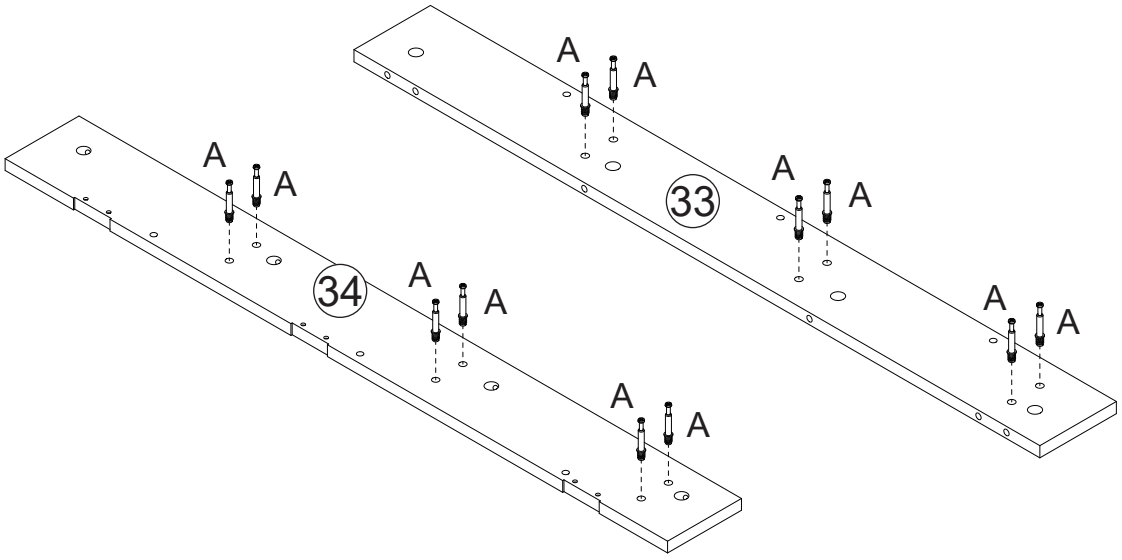


A 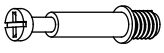 x12

# Assembly

## 39

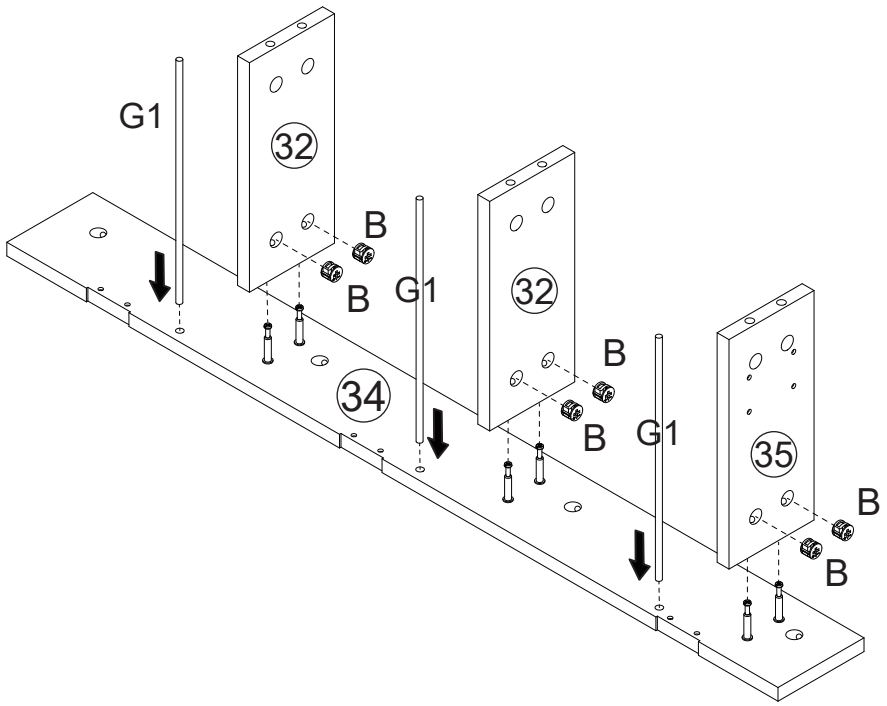


| | | |
|---|---|---|
| G1 | 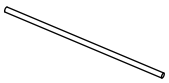 | x3 |
| B |  | x6 |

## 40

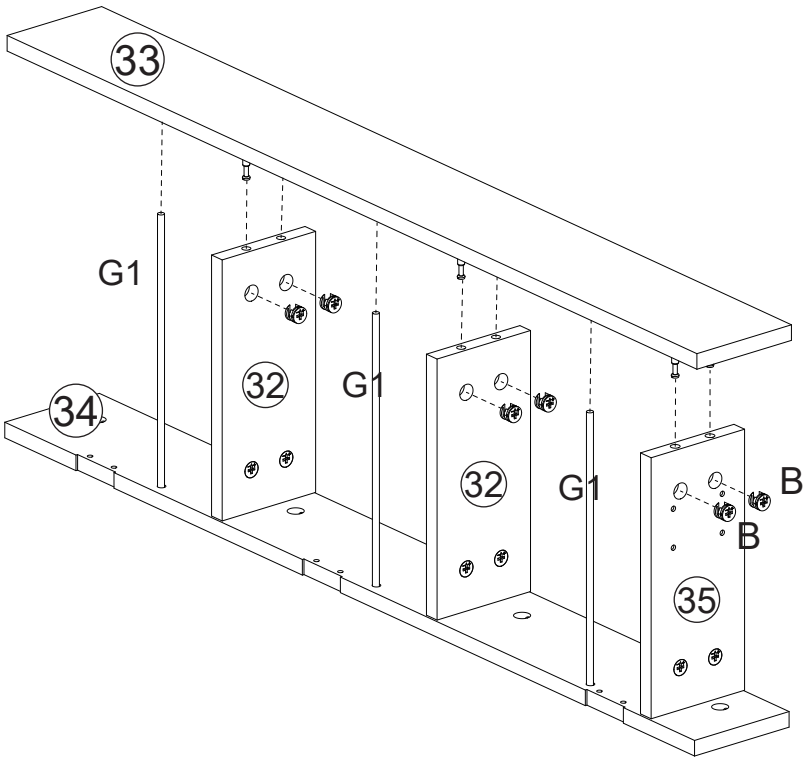


| | | |
|---|---|---|
| B |  | x6 |

# Assembly

## 41

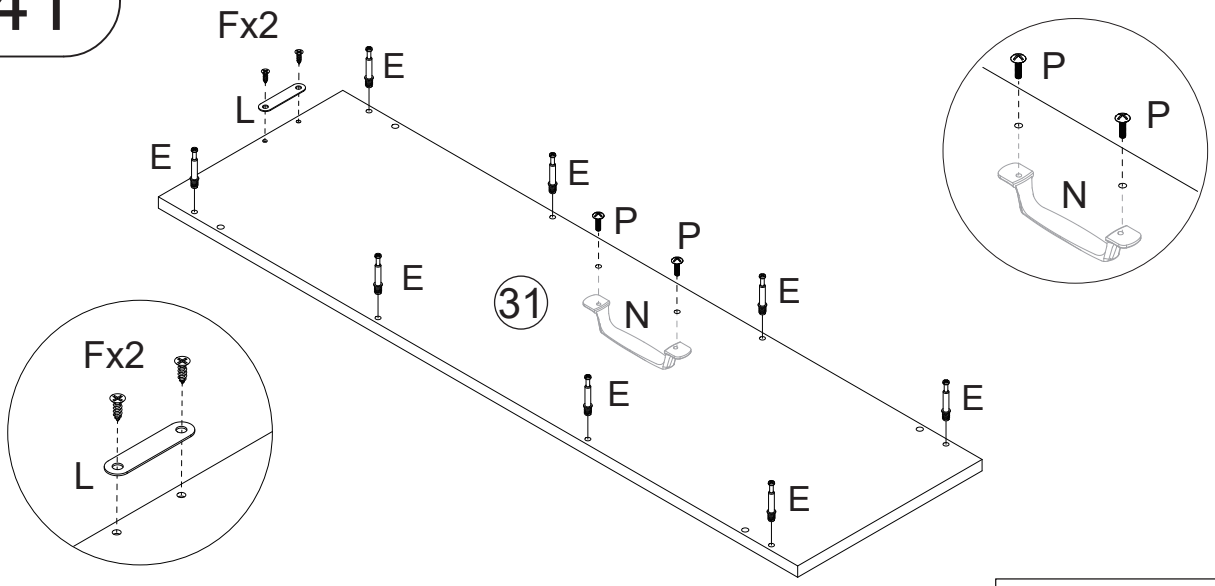


| | | | |
|---|---|---|---|
| L | x1 | | |
| N | x1 | F | x2 |
| P | x2 | E | x8 |

## 42

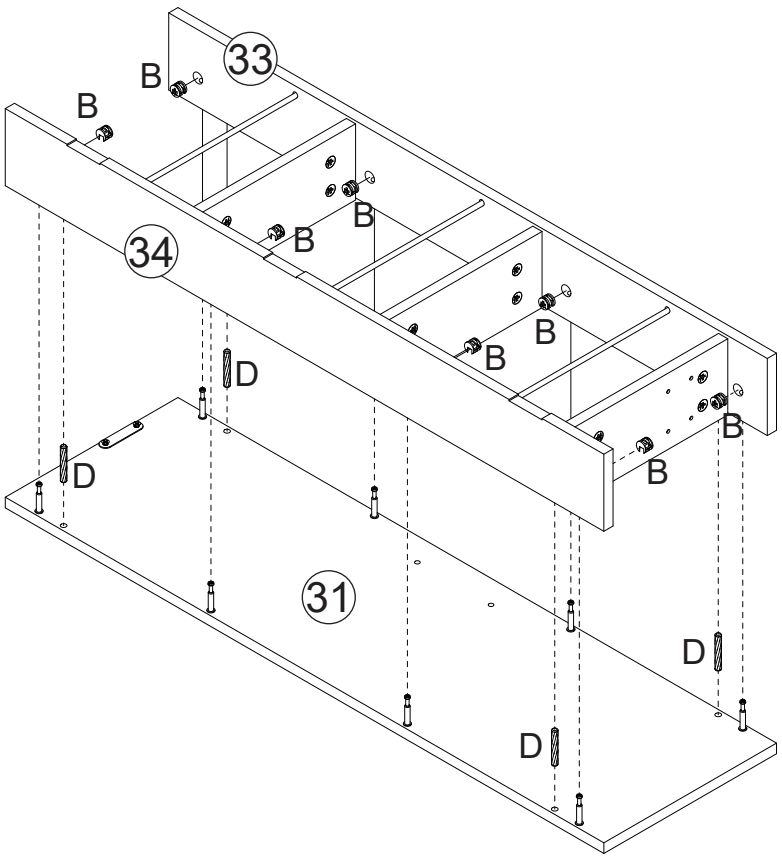


| | | | |
|---|---|---|---|
| B | x8 | | |
| D | x4 | | |

# Assembly

## 43

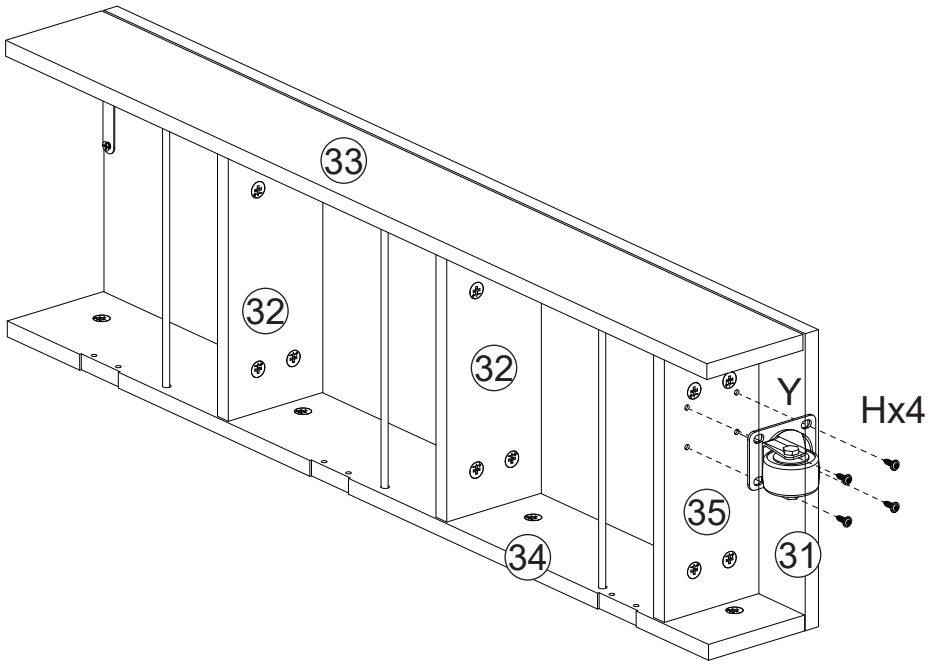


| | | |
|---|---|---|
| Y |  | x1 |
| H |  | x4 |

## 44

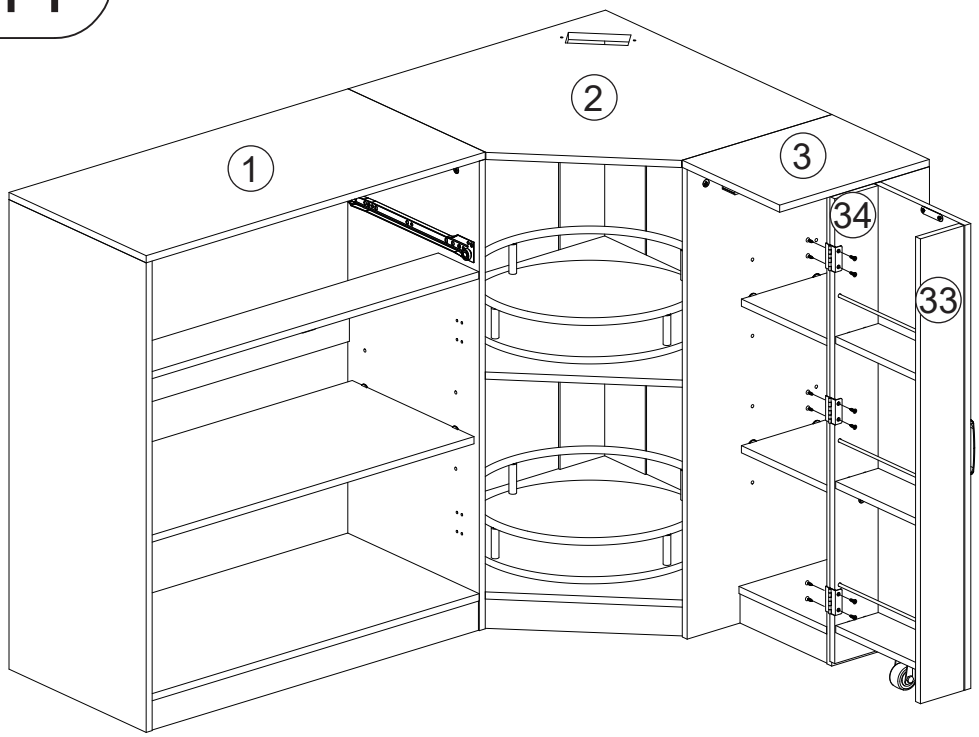


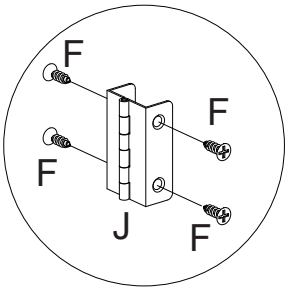


| | | |
|---|---|---|
| J | 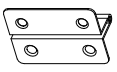 | x3 |
| F |  | x12 |

# Assembly

## 45

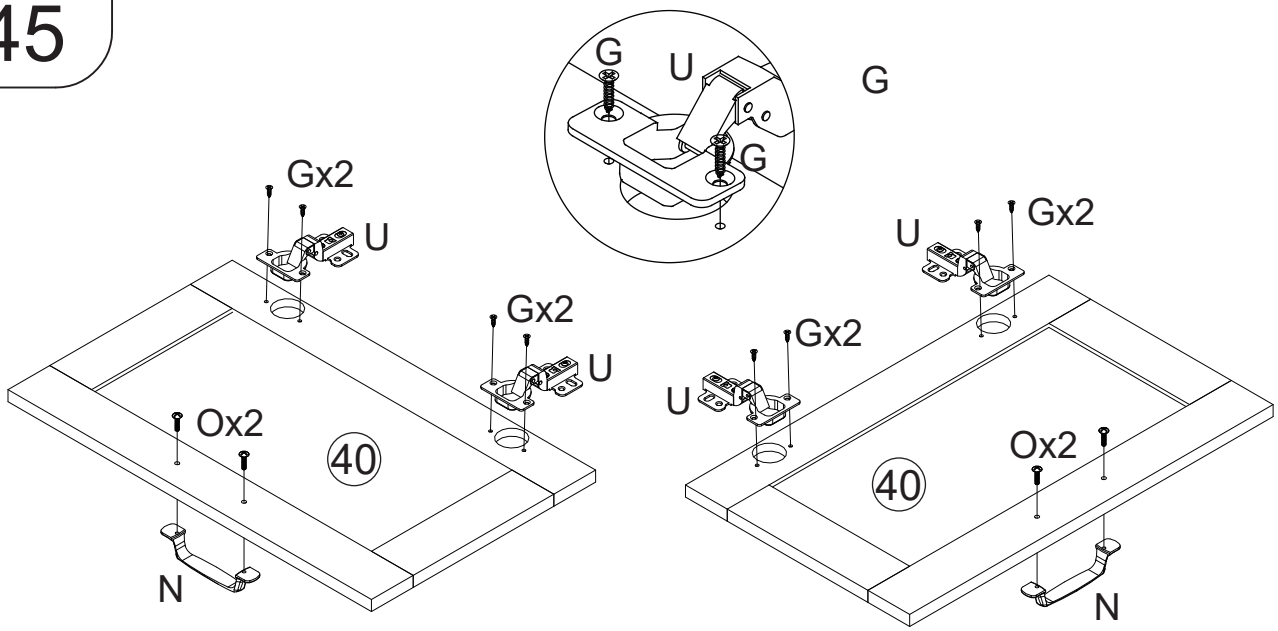


| | | | | | |
|---|---|---|---|---|---|
| N |  | x2 | U | 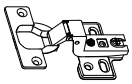 | x4 |
| O |  | x4 | G |  | x8 |

## 46

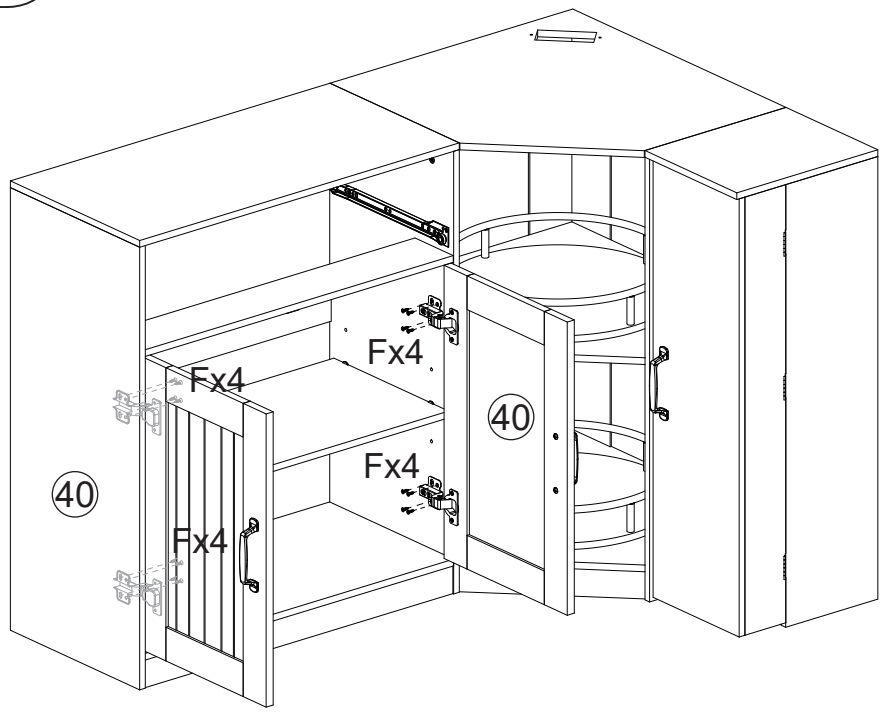


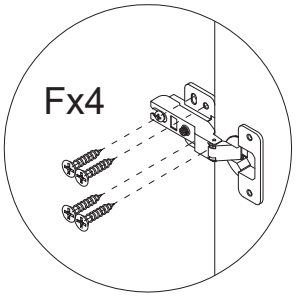


| | | | |
|---|---|---|---|
| F |  | x16 | |

# Assembly

1.

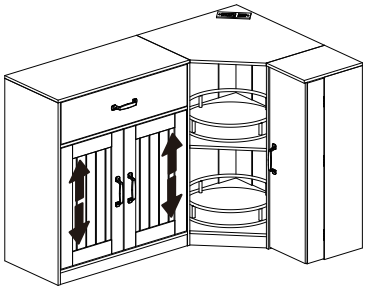

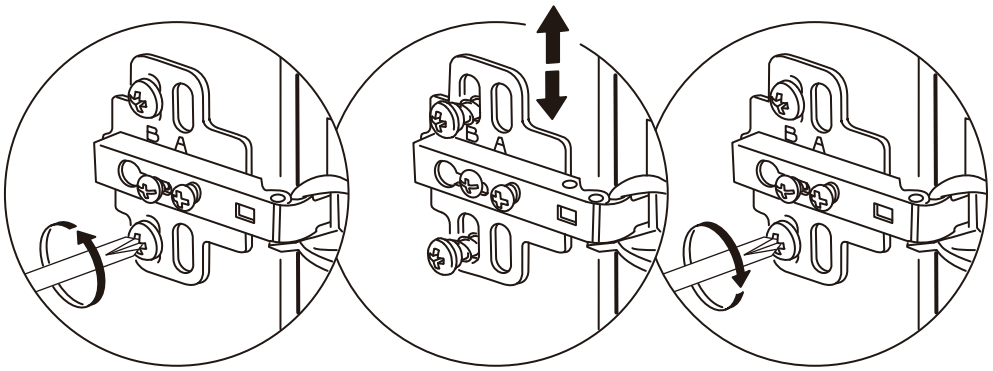


Hinge Vertical Adjustment (Up/Down)

2.

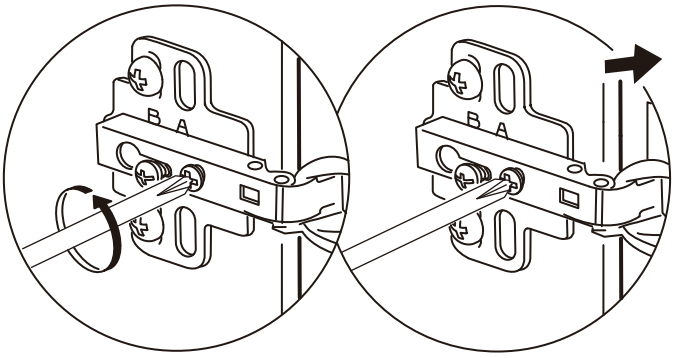


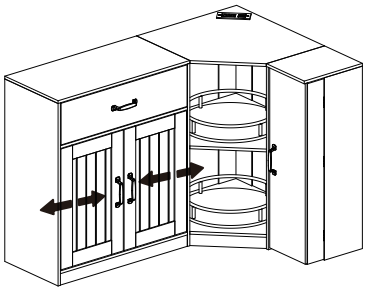

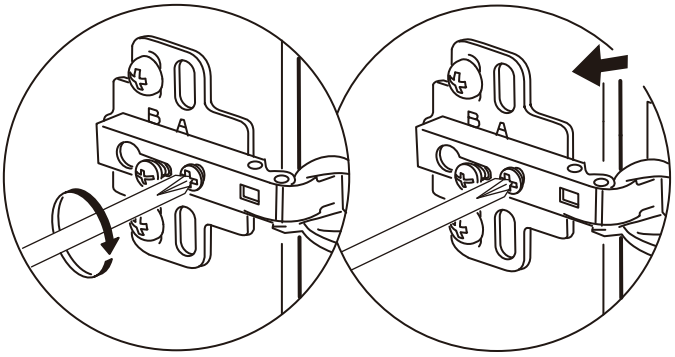


Hinge Lateral Adjustment (Left/Right)

3.

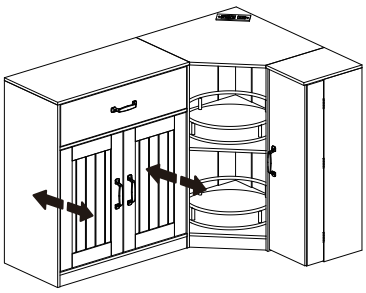

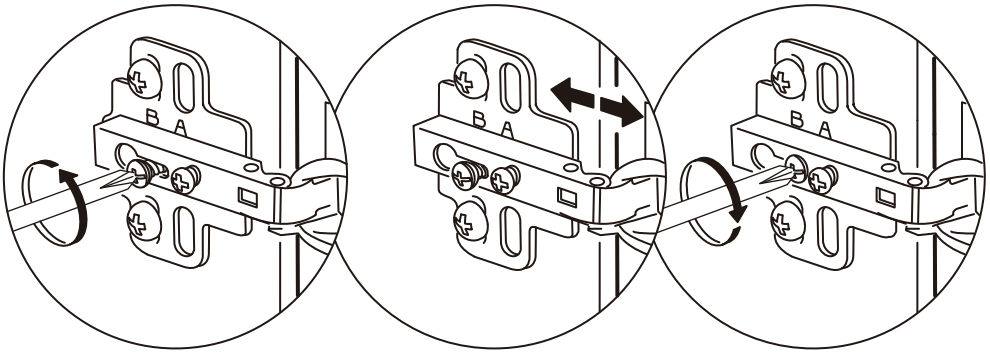


Hinge Depth Adjustment (In/Out)

# Assembly

## 47

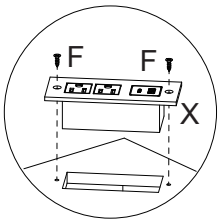


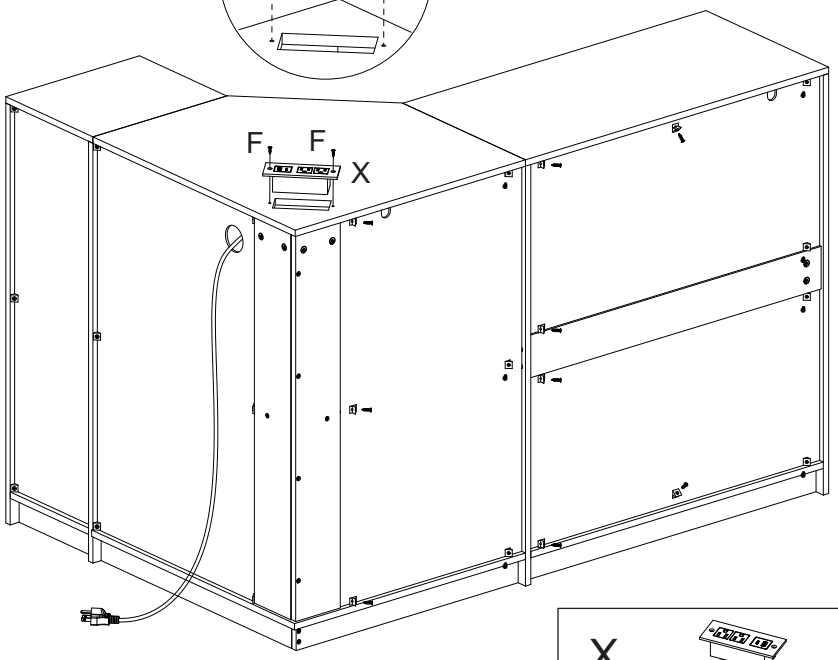


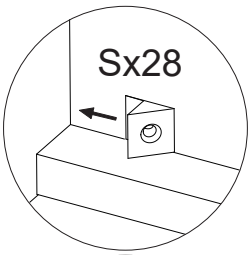





| | | | | | |
|---|---|---|---|---|---|
| X |  | x1 | S |  | x28 |
| F |  | x2 | G | 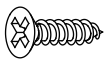 | x28 |

## 48

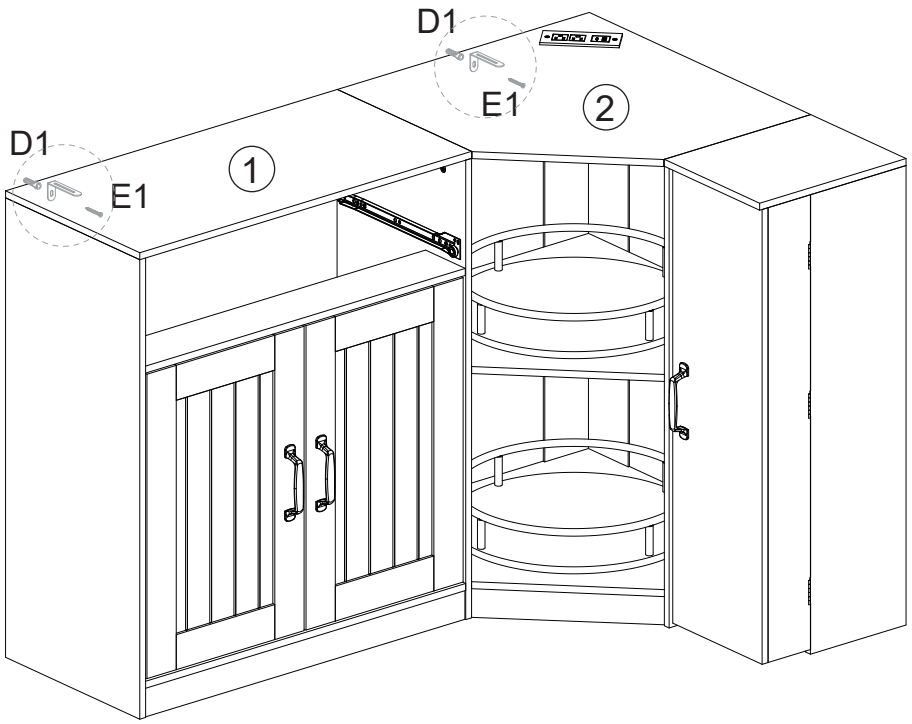


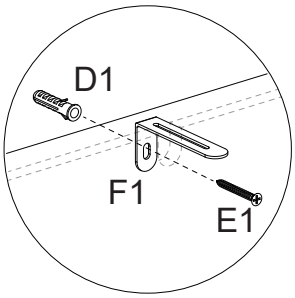


| | | |
|---|---|---|
| D1 |  | x2 |
| E1 |  | x2 |

## 49

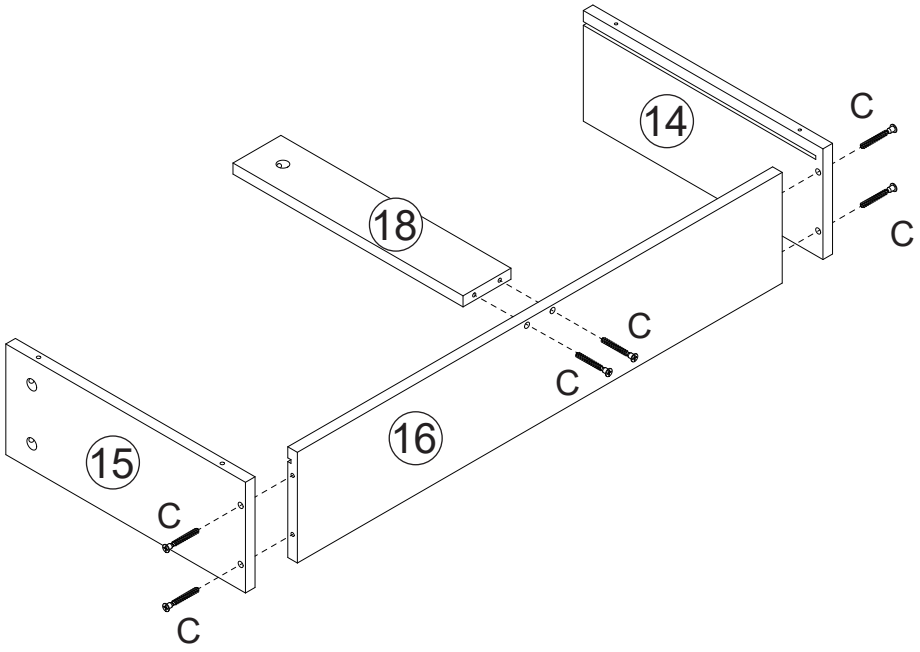


C 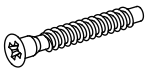 x6

## 50

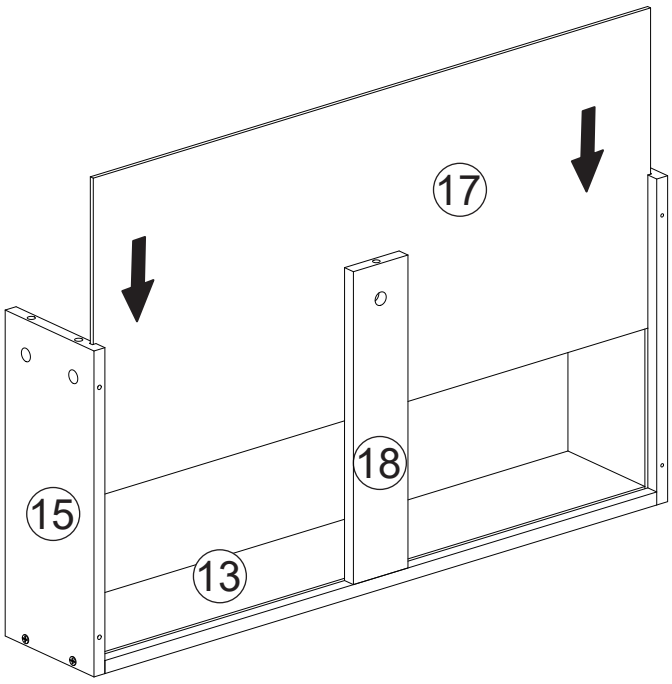

# Assembly

## 51

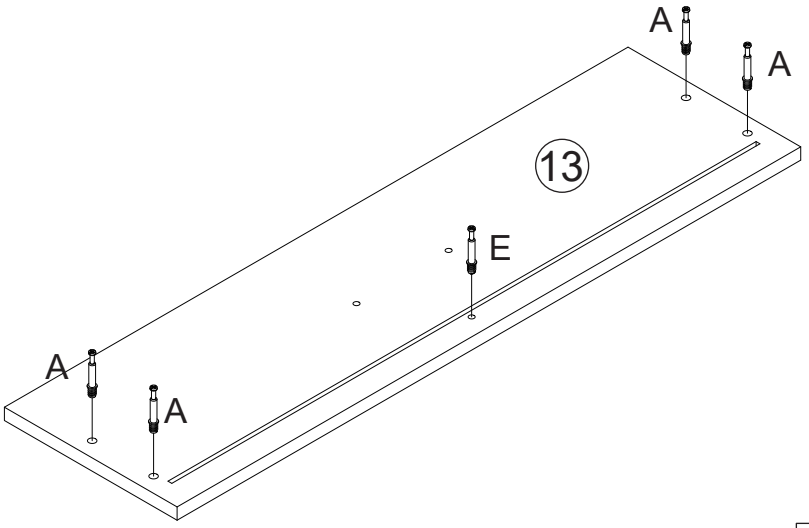


| | | |
|---|---|---|
| E | 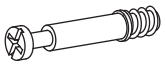 | x1 |
| A | 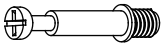 | x4 |

## 52

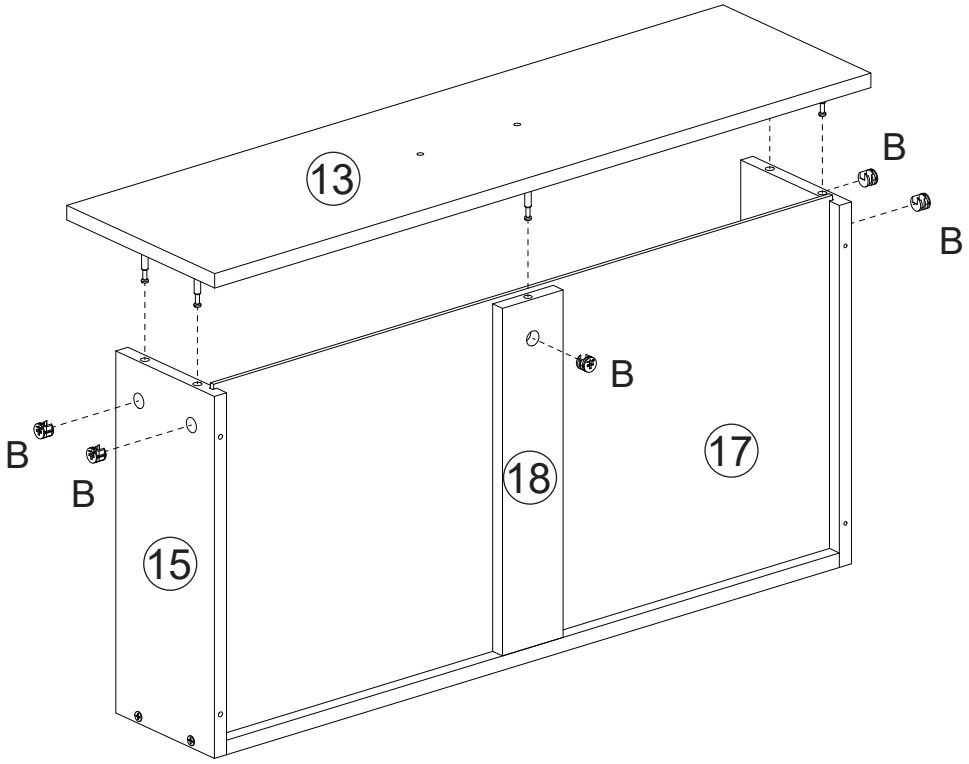


| | | |
|---|---|---|
| B |  | x5 |

## 53

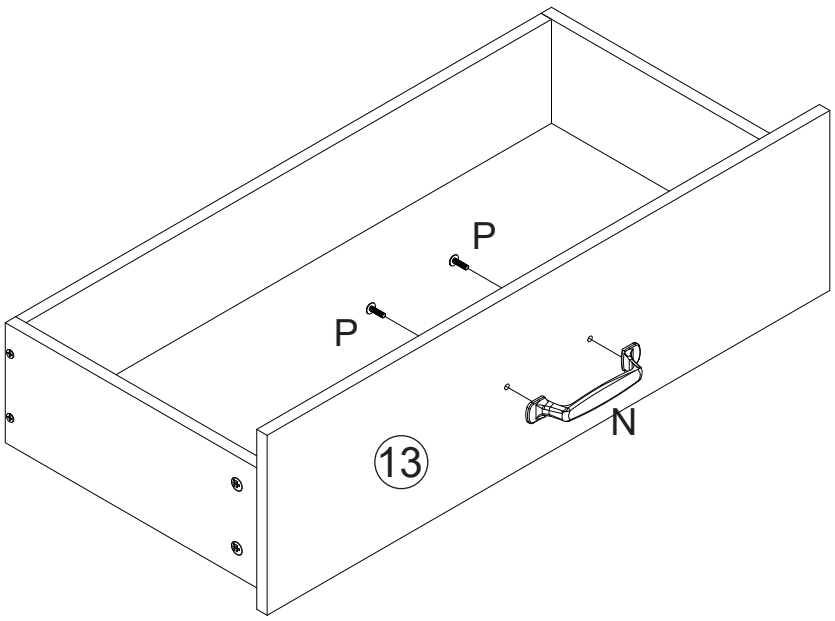


| | | |
|---|---|---|
| N |  | x1 |
| P |  | x2 |

## 54

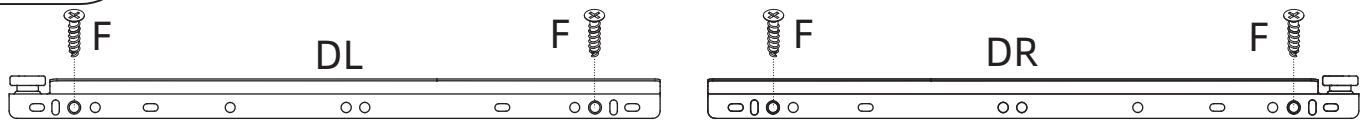


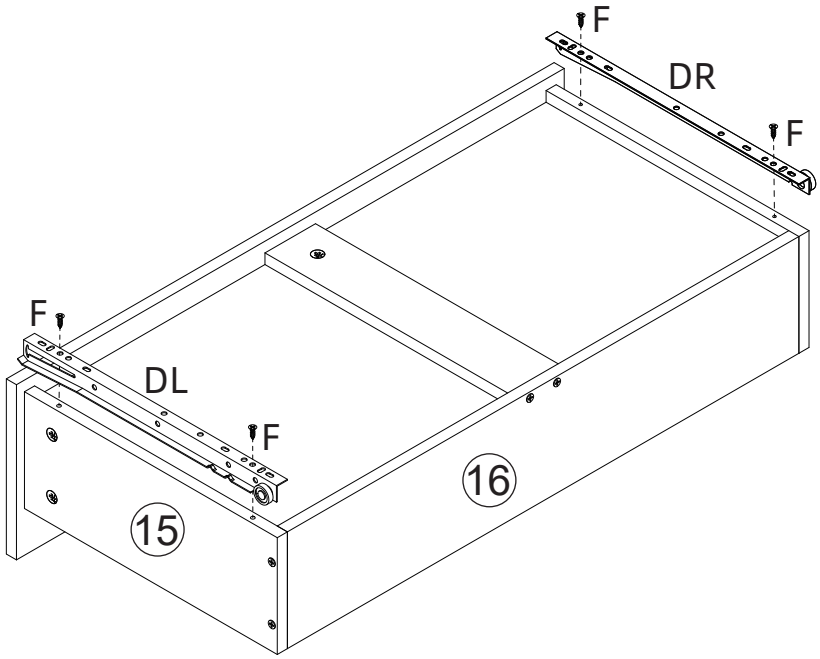


| | | |
|---|---|---|
| V | 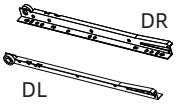  | x1 |
| F | 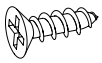 | x4 |

55

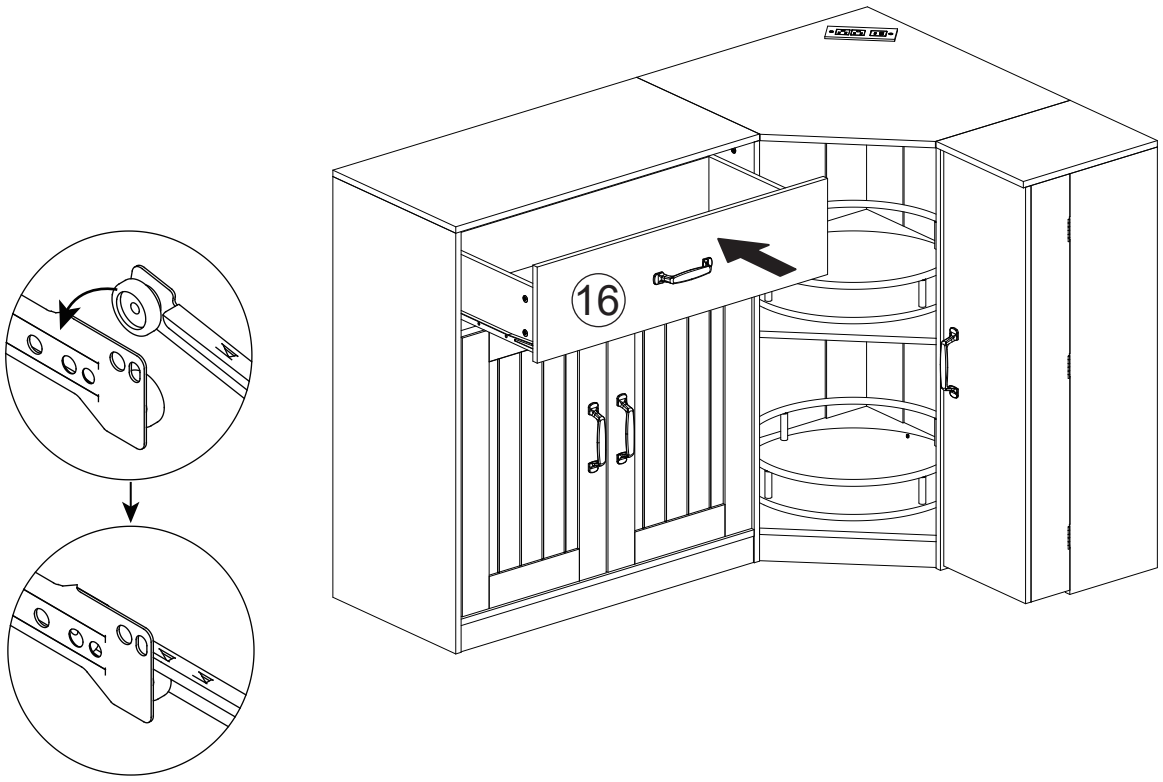


56

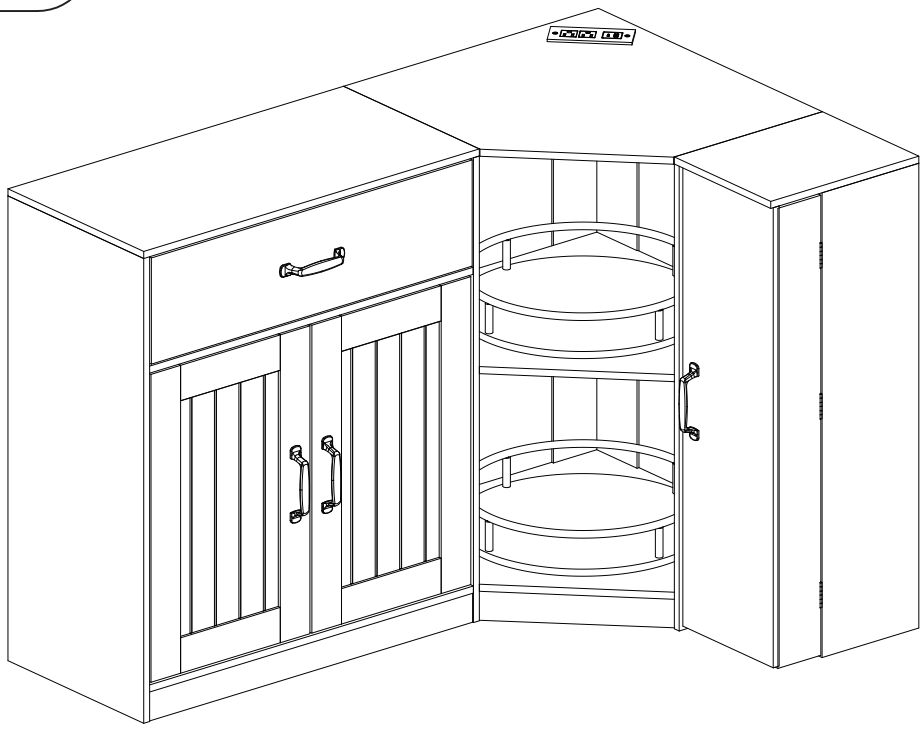

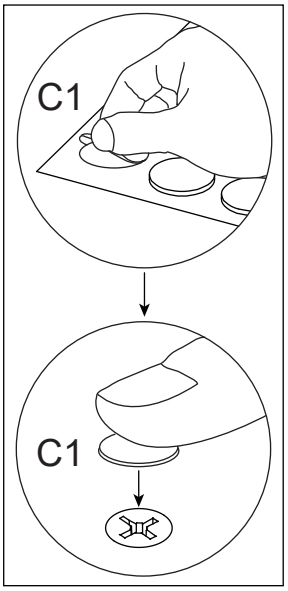


C1 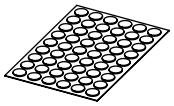 x2

57

**⚠ WARNING**





Children have died from furniture tipover. To reduce the risk of furniture tipover:

- ALWAYS install tipover restraint provided.
- NEVER put a TV on this product.
- NEVER allow children to stand, climb or hang on drawers, doors, or shelves.
- NEVER open more than one drawer at a time.
- Place heaviest items in the lowest drawers.