ASSEMBLING INSTRUCTION

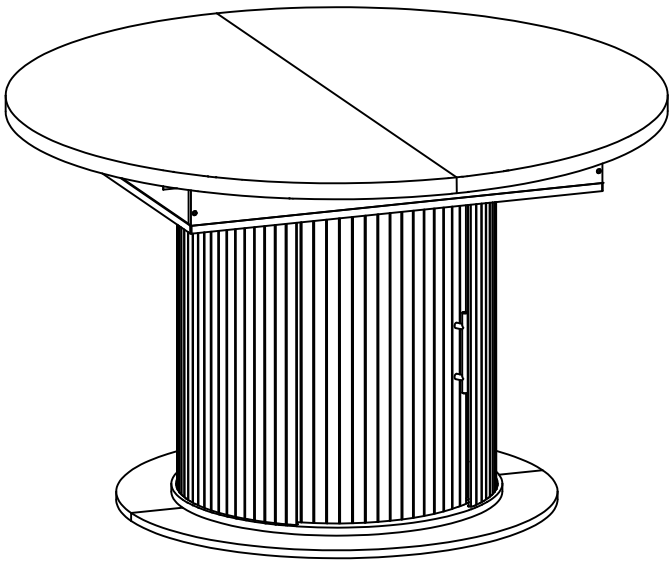

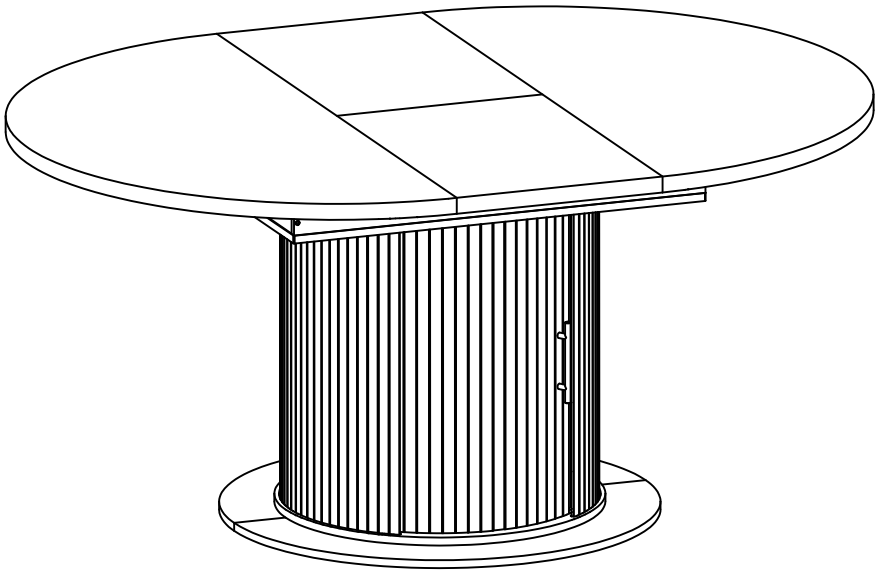

Warm Tips:

If you experience any issues with damaged or missing parts, or notice a quality defect, we kindly ask you to share the part number along with photos of the issue. Once we have reviewed and confirmed the details, we will provide appropriate solutions, including arrang inga replacement. We sincerely appreciate your understanding and patience! This instruction booklet contains important safety information. please read and keep for future reference.

Important Warm Tip:
In order to help you assemble more quickly and easily,
we recommend that you refer to the "Assembly Video" on the product link, please check it.
And the paper guidebook can be used as an additional auxiliary instruction. Thanks!

TIPS BEFORE YOU START

1. Before assembling your furniture, please check that all parts are present and laid out.
2. Before initiating each assembly step, please confirm required parts are identified.
3. Please ensure adequate space and assistance for safe assembly of large items.
4. We recommend assembling the product near its intended placement area to avoid relocation after assembly.
5. We recommend to place components on soft surfaces (e.g., carpet, blanket) during assembly to prevent damage of the item.
6. Please do not overtighten any fittings, as this may damage the product. We recommend hand-tightening rather than using power tools.
7. Please position fully assembled product on flat, stable surfaces with even support.
8. Please do not stand on or use this product as a step ladder.
9. Product is designed exclusively for indoor household use in non-industrial environments.
10. Please lift with proper body mechanics to prevent injury and product damage.

CARE AND MAINTENANCE OF YOUR FURNITURE

- ☑ Periodically inspect and retighten all fittings as needed to maintain structural integrity.
- ☑ Periodically inspect all screws and retighten if necessary to maintain product stability.
- ☑ For optimal glass cleaning, apply a dedicated glass cleaner using a microfiber cloth to prevent streaks.
- ☑ Avoid liquid contact to prevent structural warping and surface delamination; immediately wipe any spills.
- ☑ Avoid placing hot objects (e.g., hot beverages) directly onto surfaces to prevent thermal shock and permanent discoloration.
- ☑ Lift the unit with multiple personnel using proper technique; dragging or pushing risks structural failure and injury.

ASSEMBLY REQUIREMENTS

- ☑ Equipment: phillips head screwdriver.
- ☑ 2 x adults required.
- ☑ 2m x 2m assembly space required.
- ☑ 1.5 hour assembly time approx.

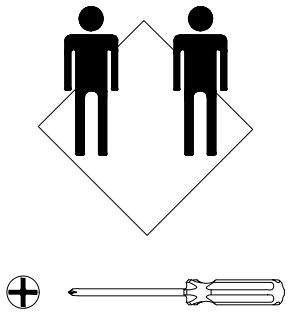

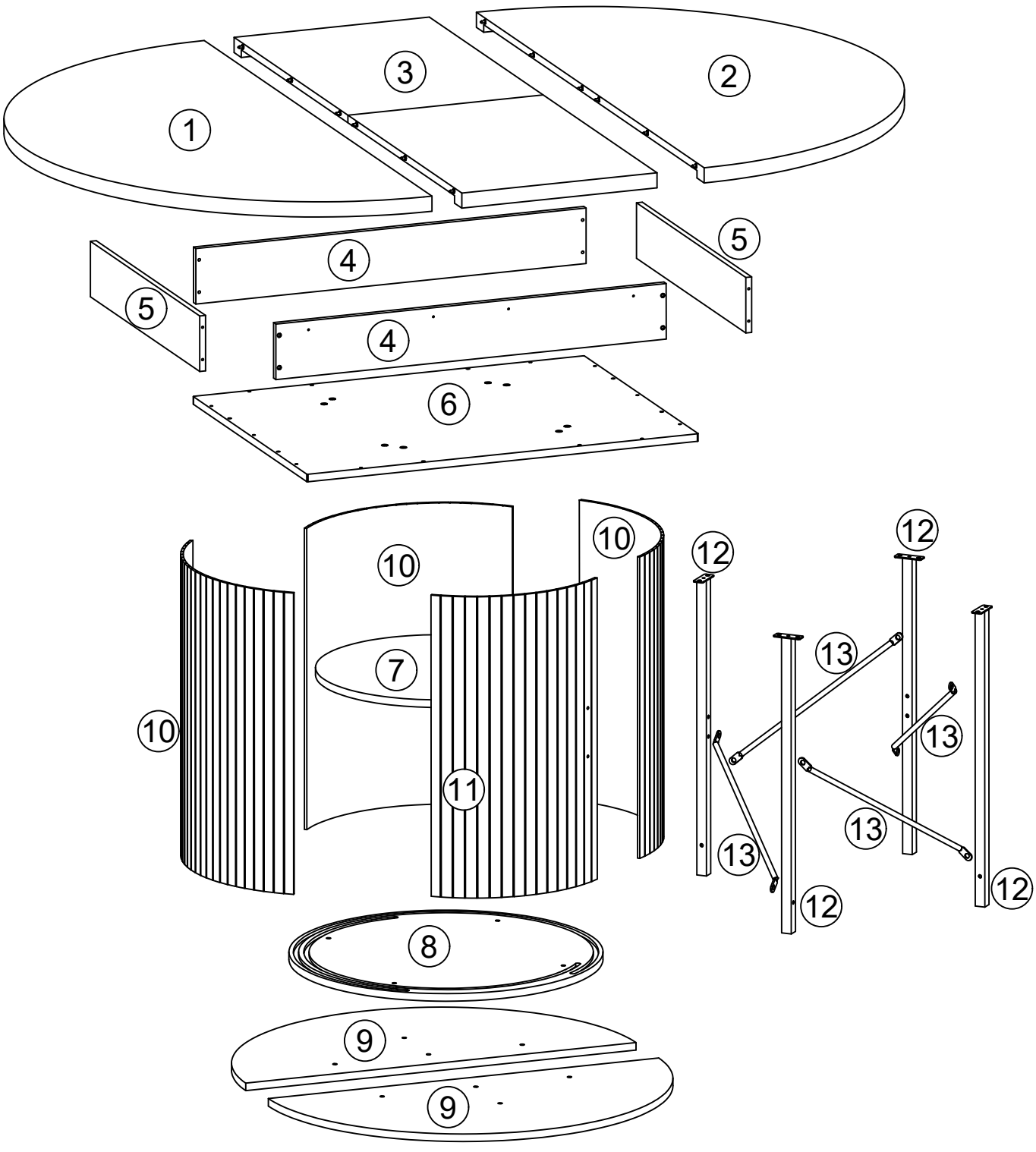
1
2
3
4
4
5
5
6
7
8
9
9
10
10
10
11
12
12
12
13
13
13
13

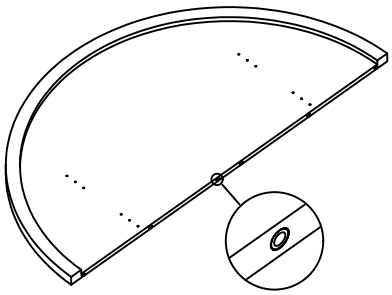

①	X1

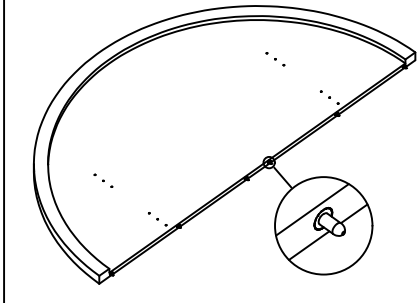

②	X1

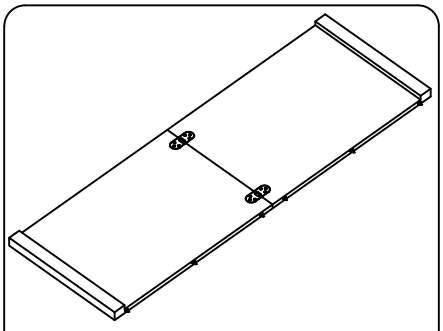

③	X1

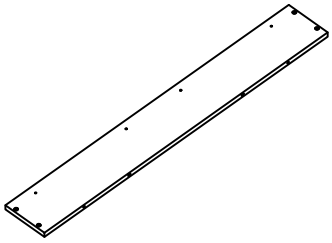

④	X2

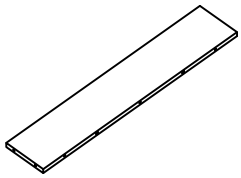

⑤	X2

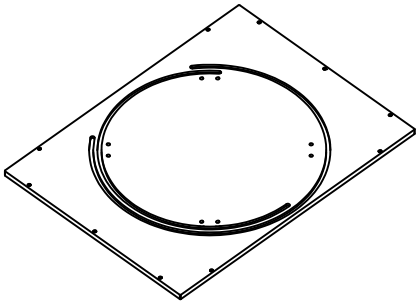

⑥	X1

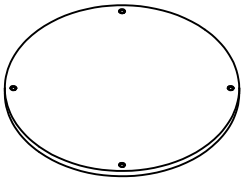

⑦	X1

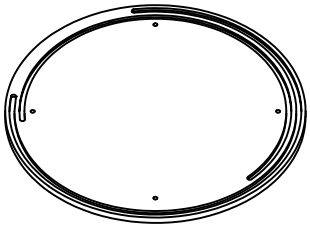

⑧	X1

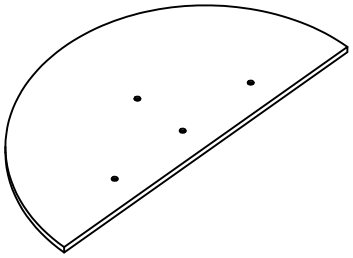

⑨	X2

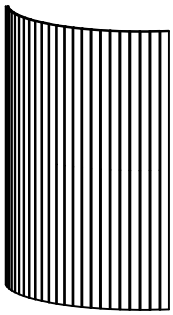

⑩	X3

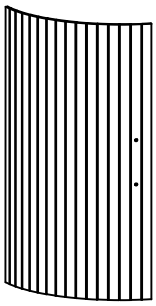

⑪	X1

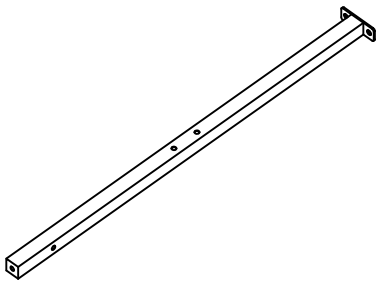

⑫	X4

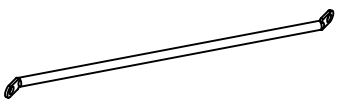

⑬	X4



Ø6x30mm

A	X8



M5x38mm

B	X18

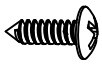

M4x12mm

C	X32



Ø20mm

D	X8

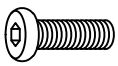

M6x12mm

E	X8

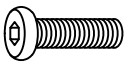

M6x15mm

F	X16

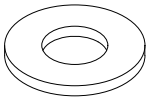

M6mm

G	X20

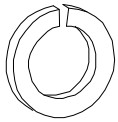

M6mm

H	X16



M6x20mm

I	X8



M6x30mm

J	X4

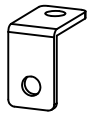

K	X4

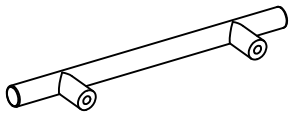

L	X1

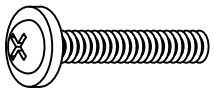

M4x10mm

M	X2

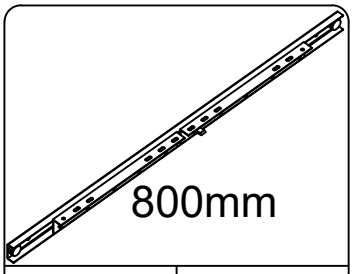

800mm

N	X2



3#

O	X1

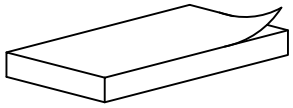

EVA

P	X8

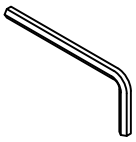

4#

Q	X1

Step:1

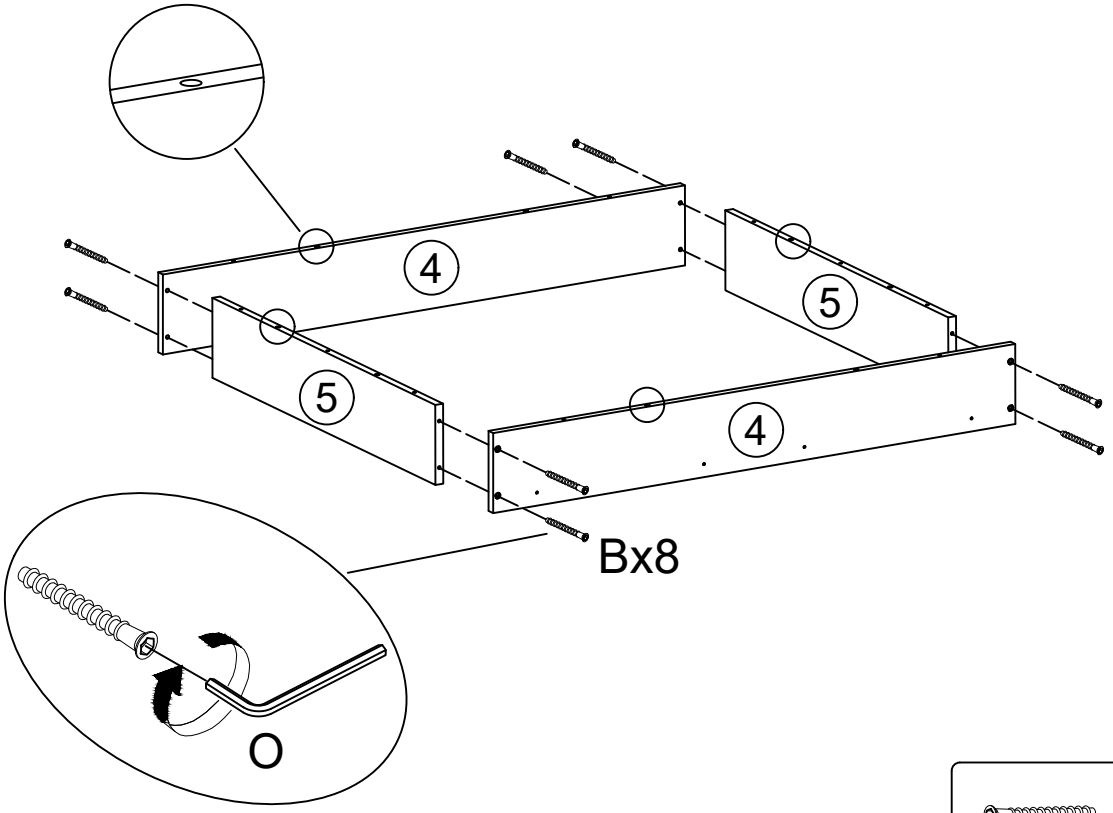

M5x38mm		3#	
B	X8	O	X1

Step:2

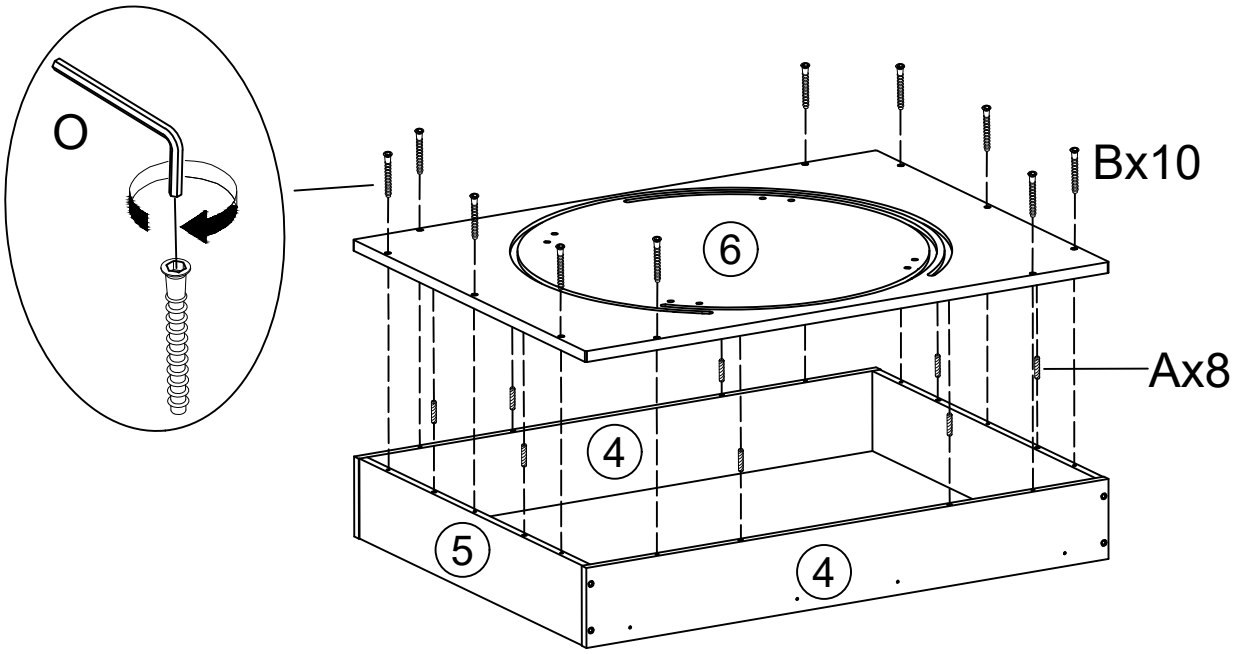

Ø6x30mm		M5x38mm		3#	
A	X8	B	X10	O	X1

Step:3

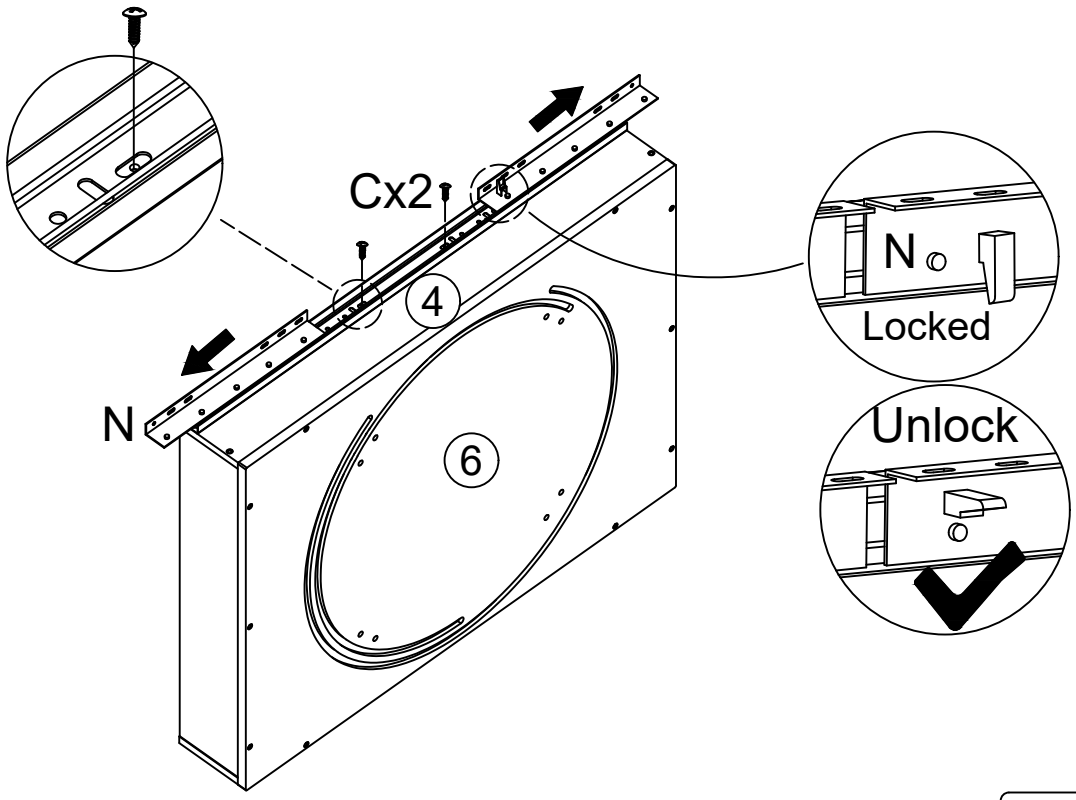

M4x12mm		800mm	
C	X2	N	X1

Step:4

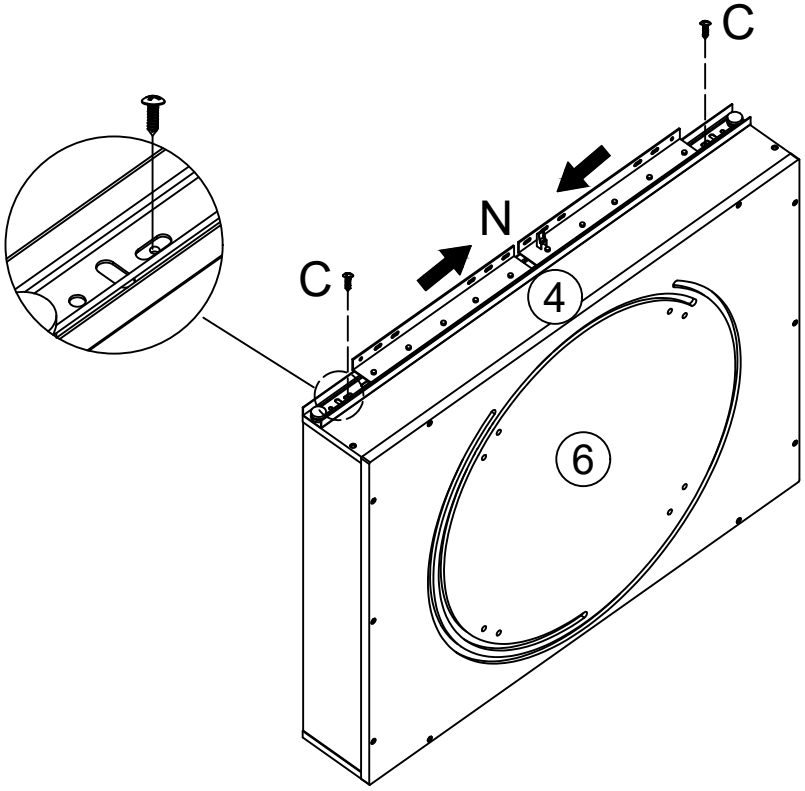

M4x12mm	
C	X2

Step:5

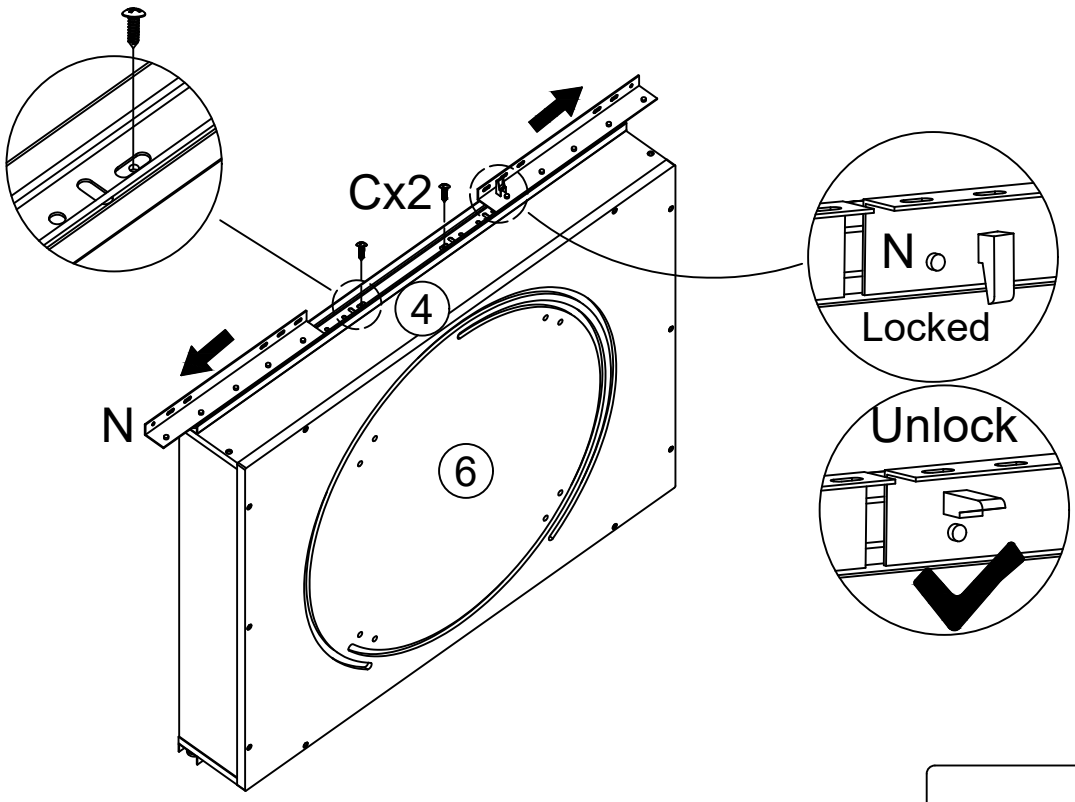

M4x12mm		800mm	
C	X2	N	X1

Step:6

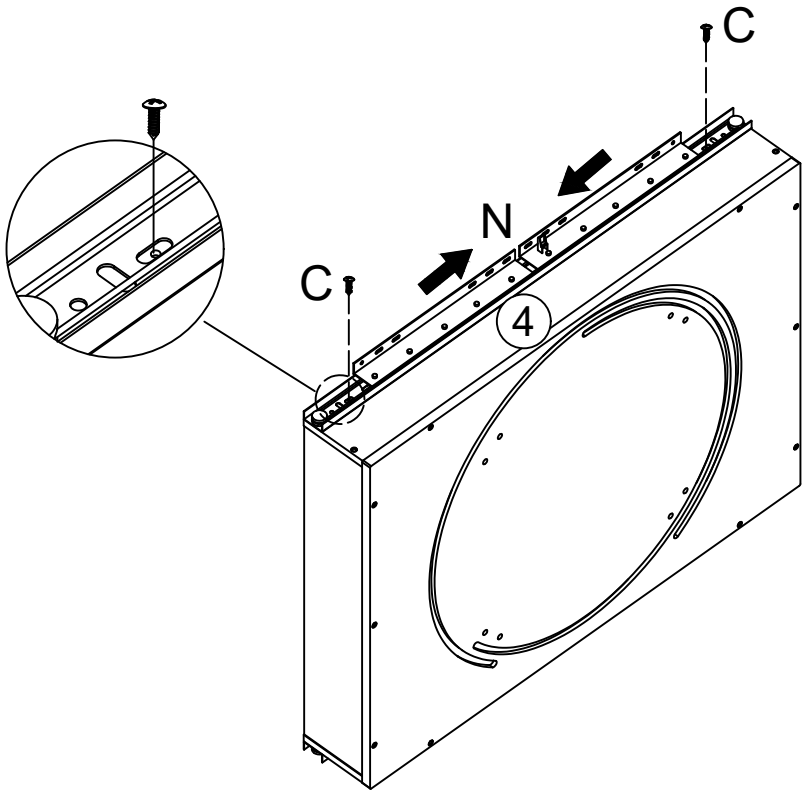

M4x12mm	
C	X2

Step:7

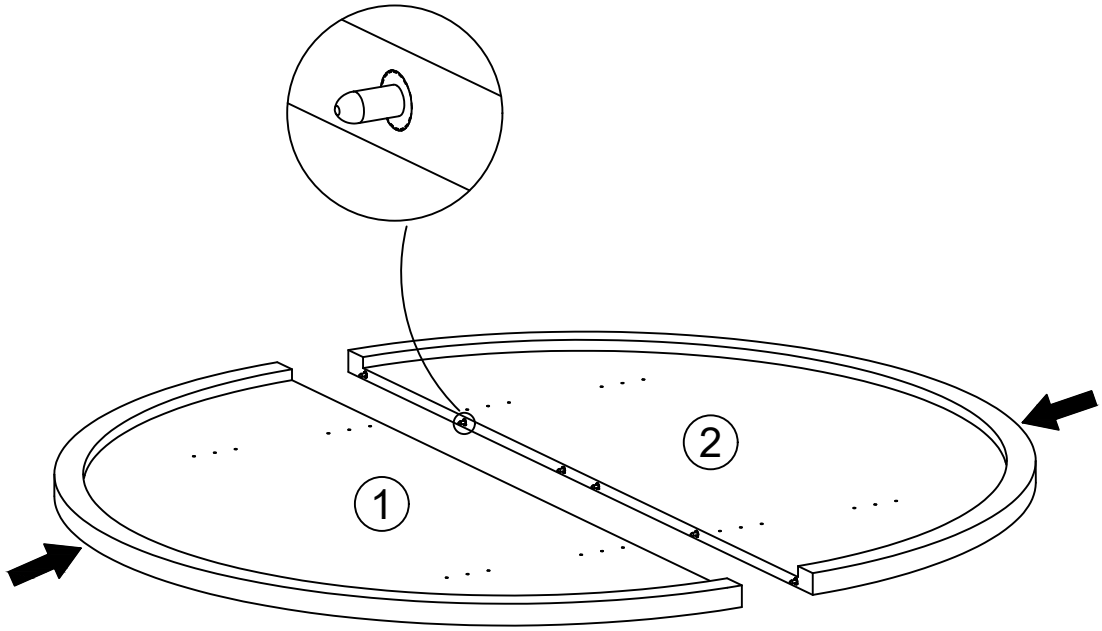

Step:8

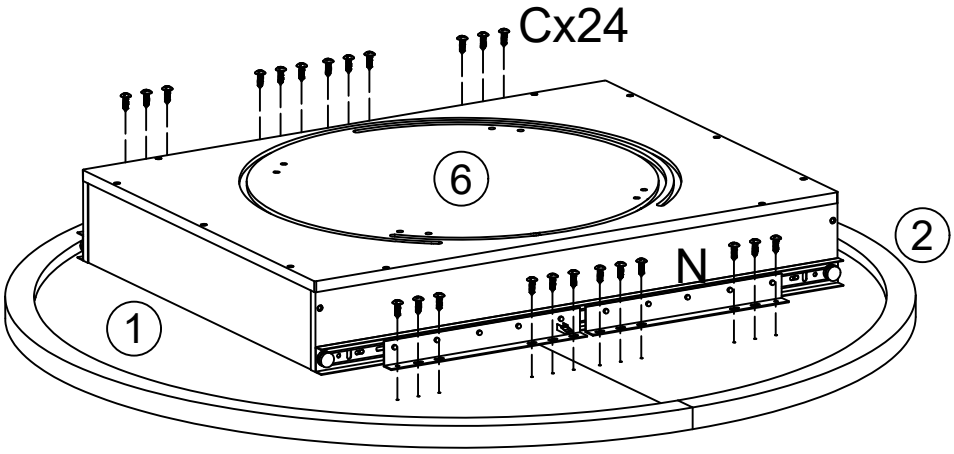

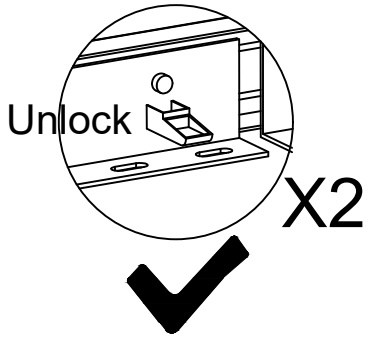

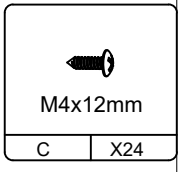

Step:9

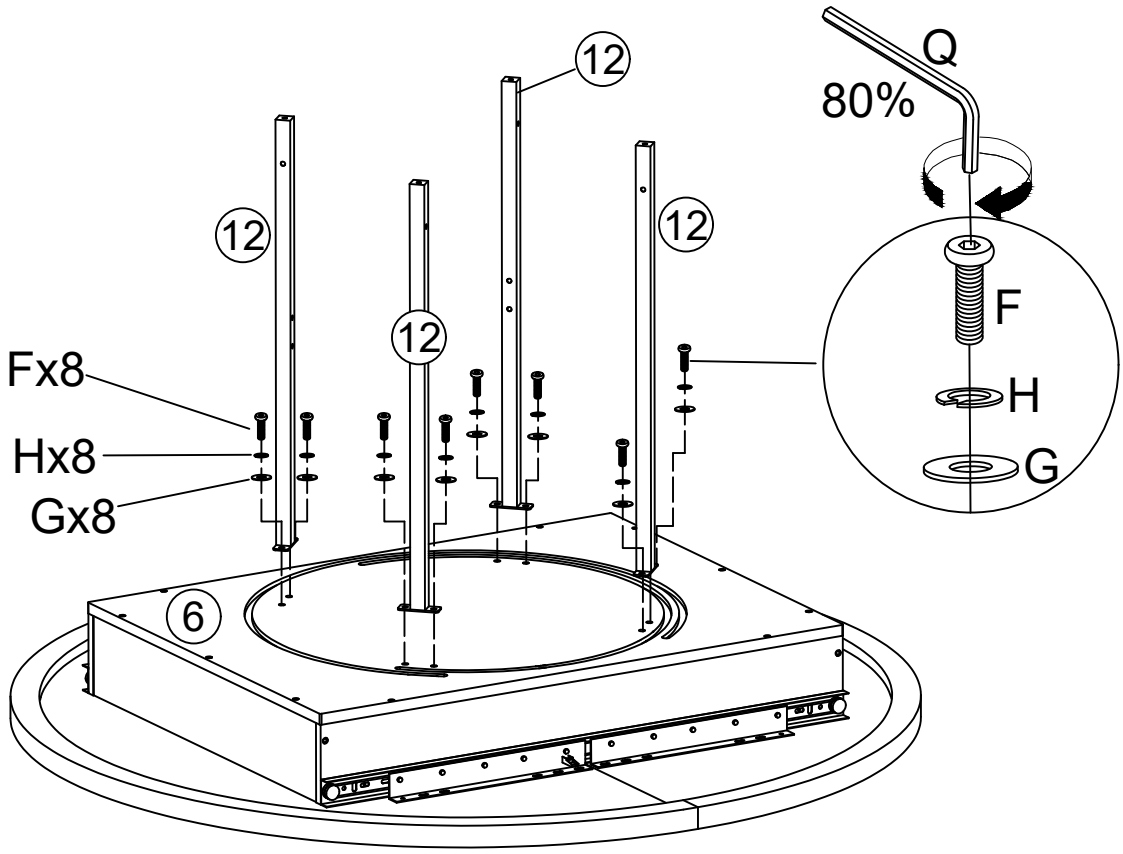

M6x15mm		M6mm		M6mm		4#	
F	X8	G	X8	H	X8	Q	X1

Step:10

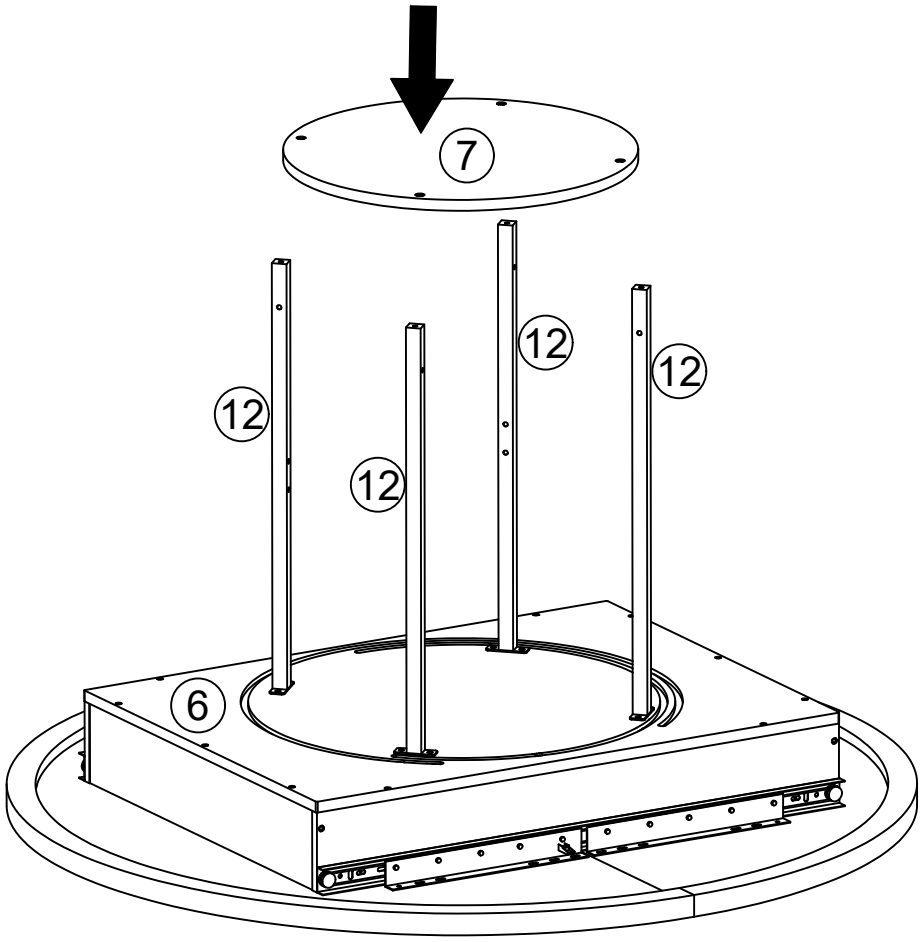

Step:11

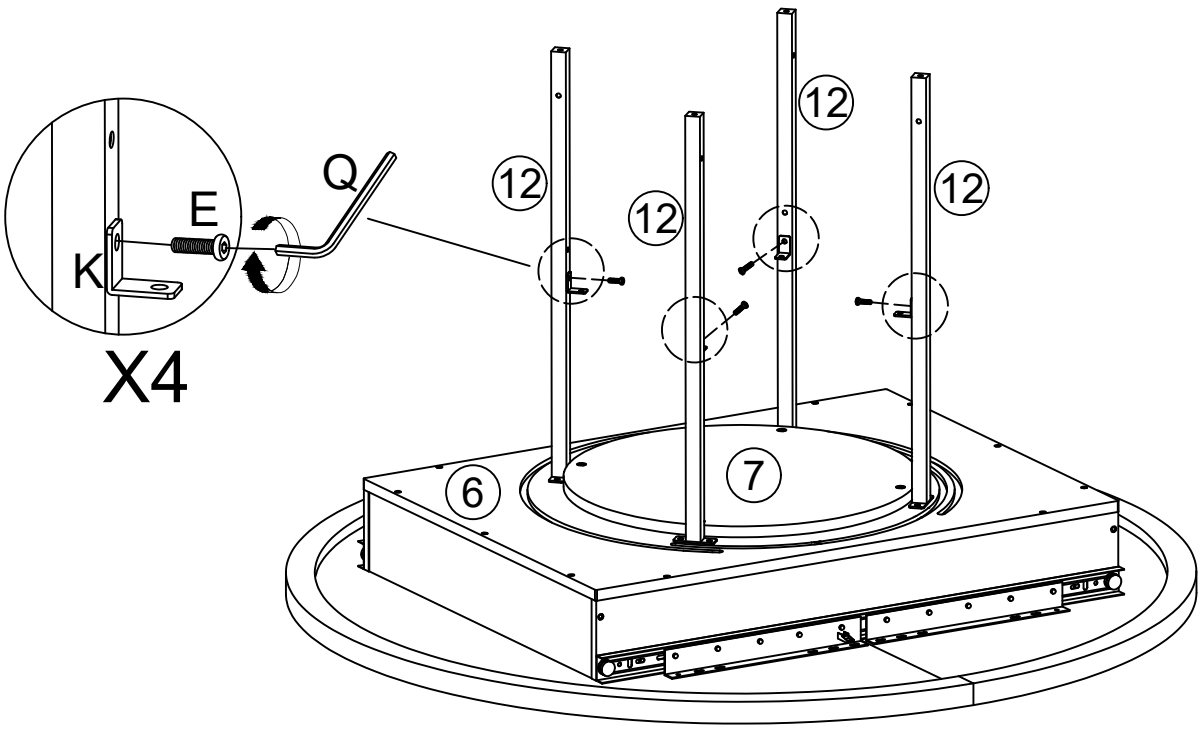

M6x12mm				4#	
E	X4	K	X4	Q	X1

Step:12

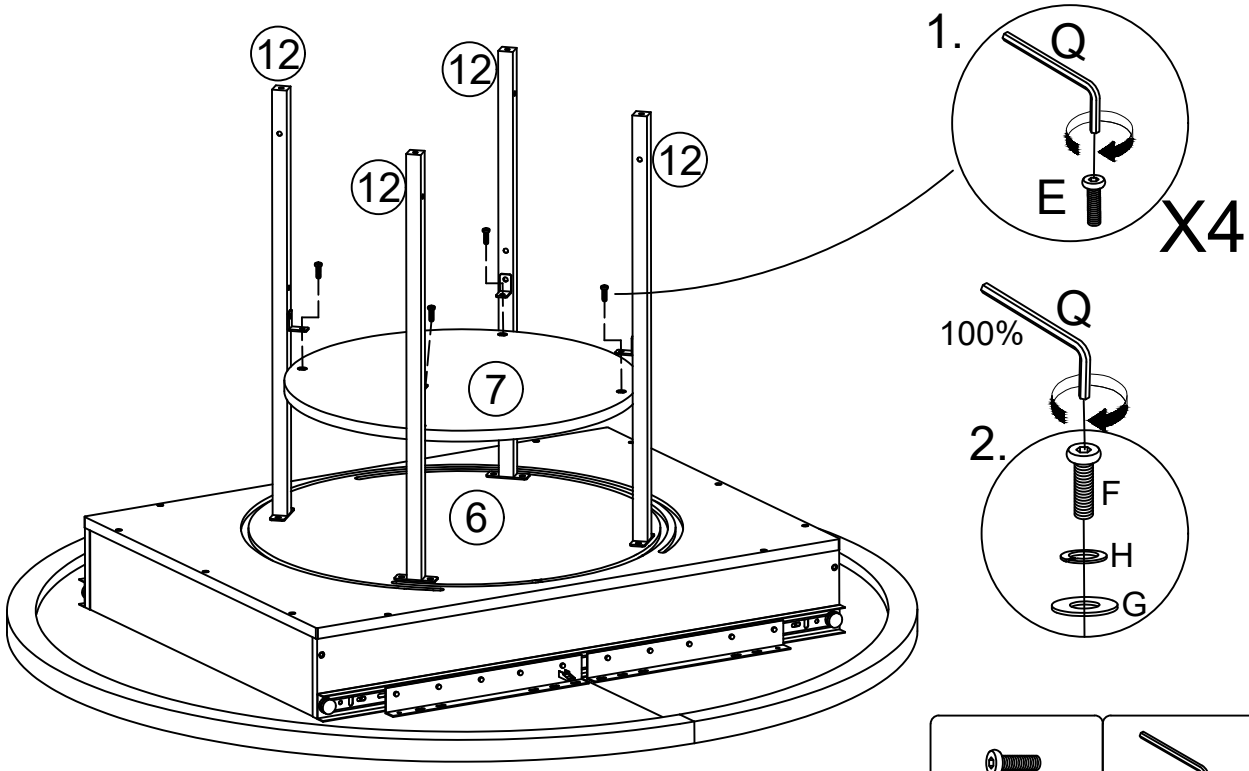

M6x12mm		4#	
E	X4	Q	X1

Step:13

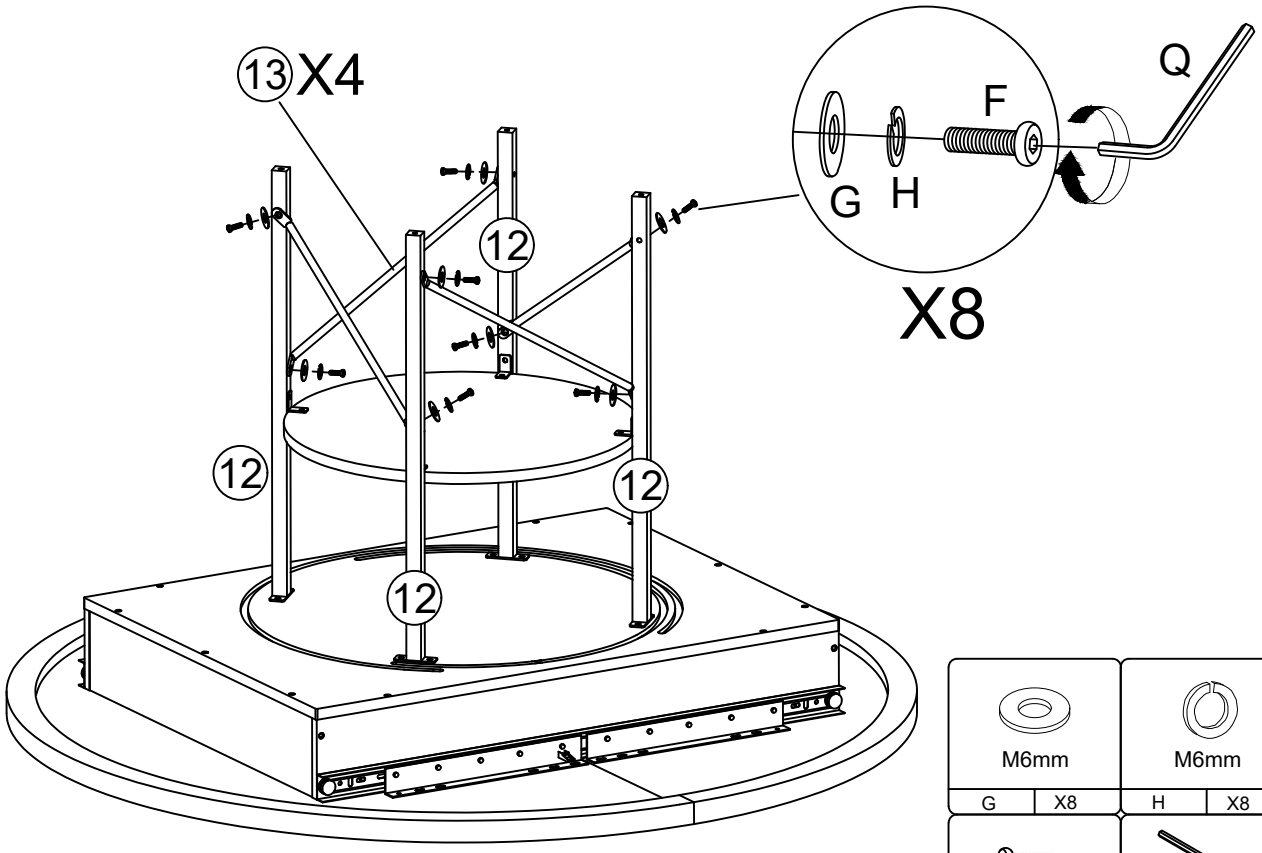

M6mm	M6mm
G X8	H X8
 M6x15mm	 4#
F X8	Q X1

Step:14

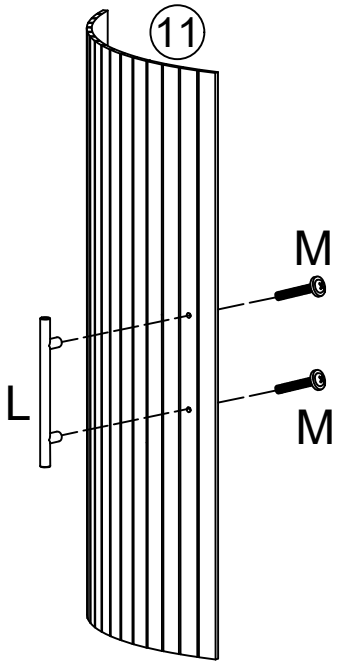

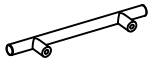	 M4x10mm
L X1	M X2

Step:15

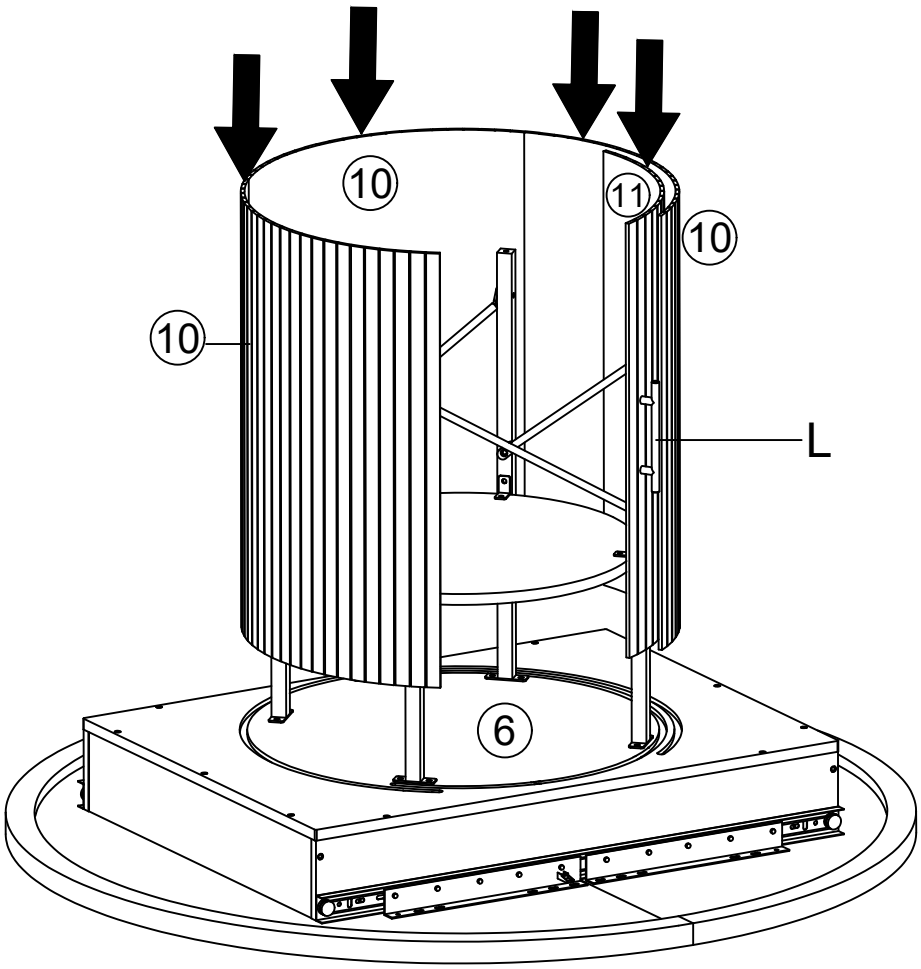

Step:16

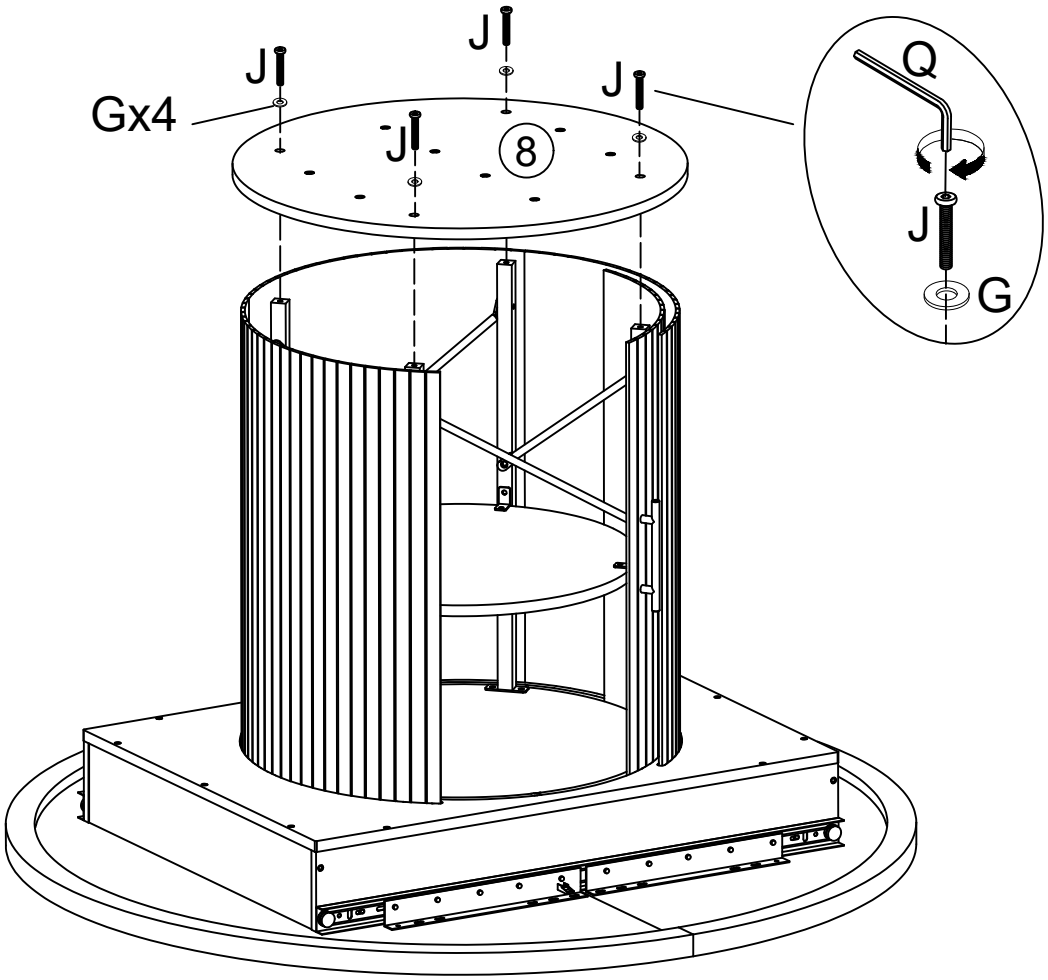

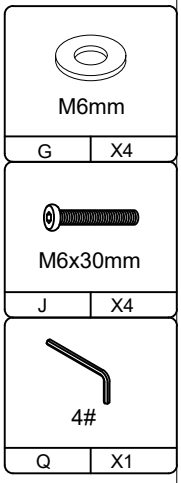

Step:17

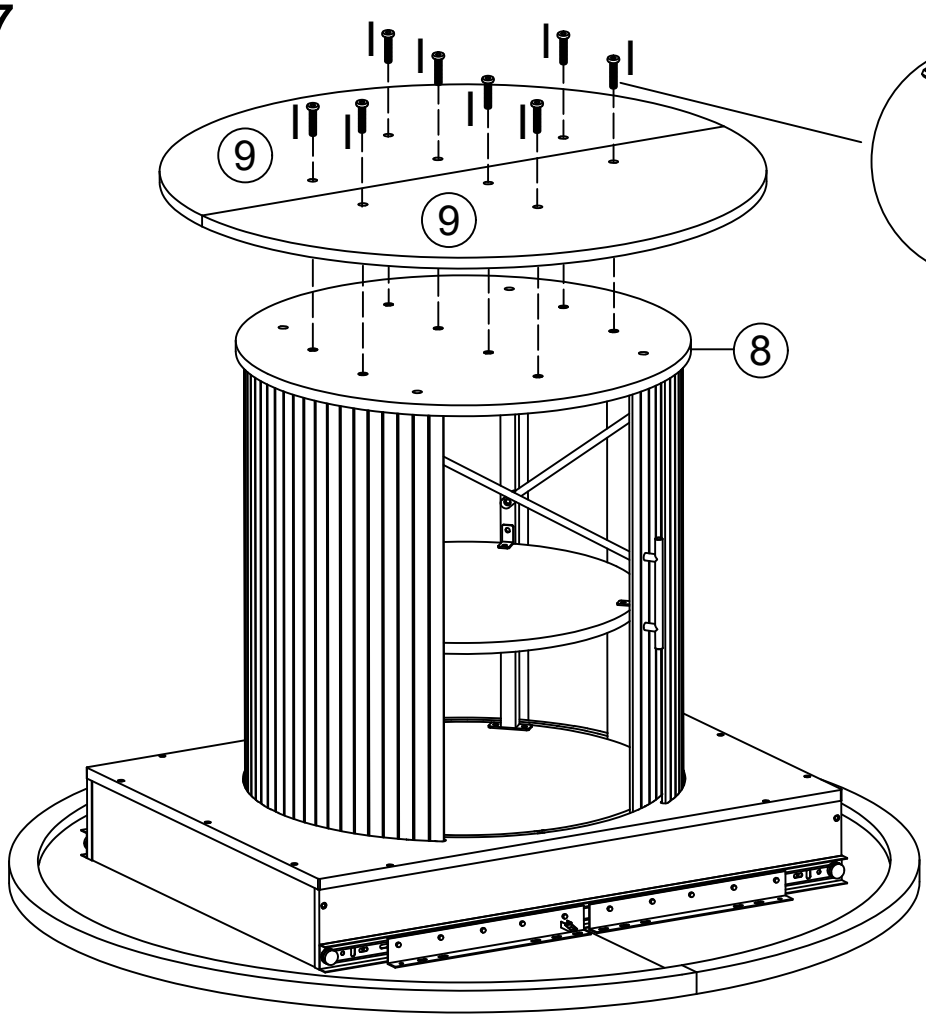

M6x20mm		4#	
I	X8	Q	X1

Step:18

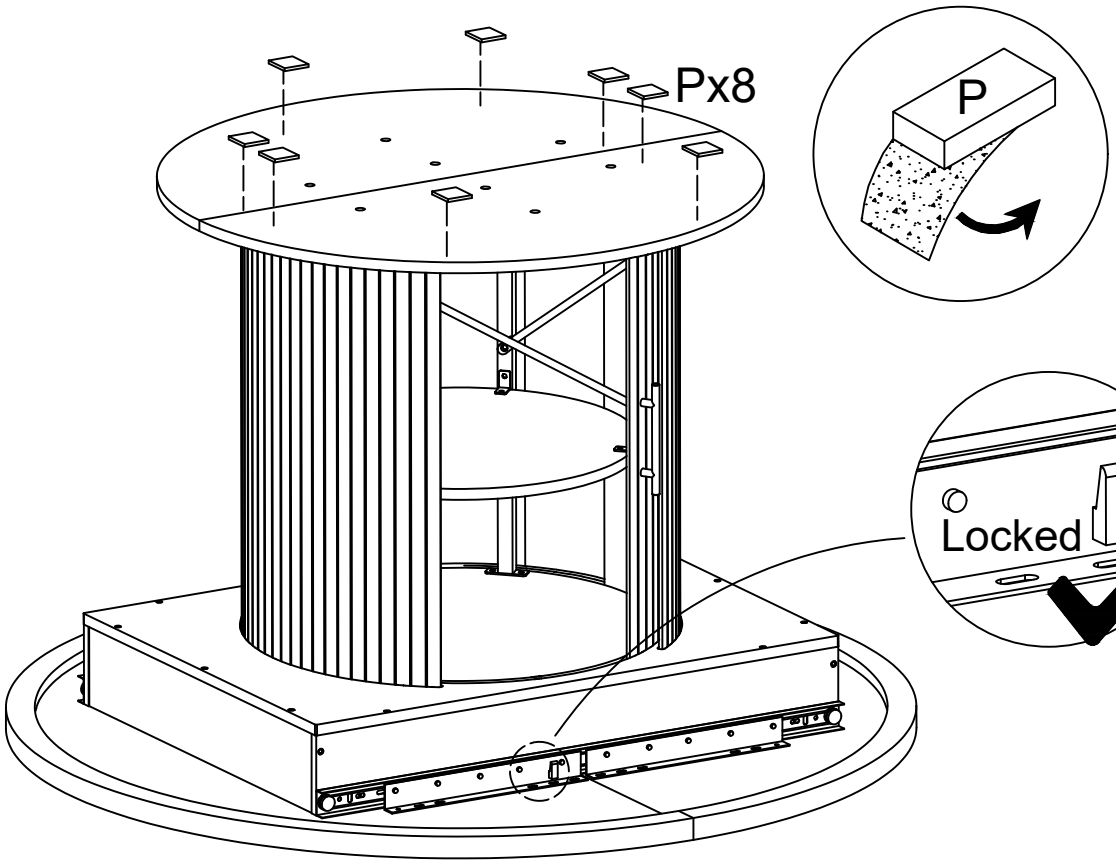

EVA	
P	X8

Step:19

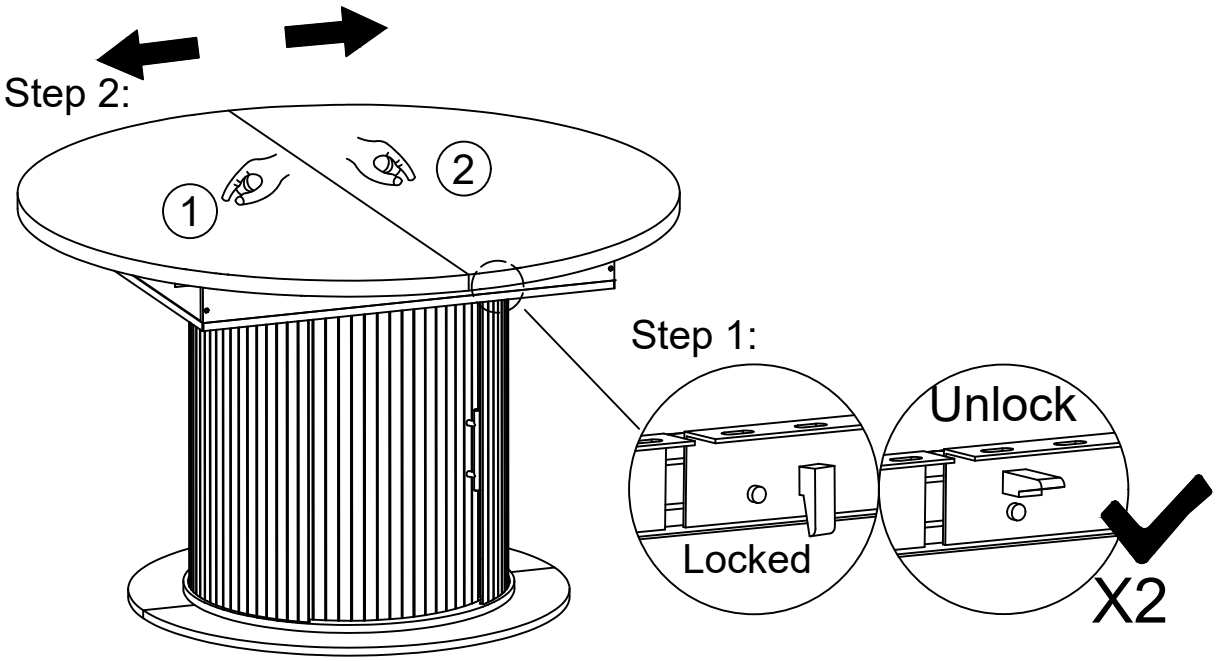

As shown in the figure, after unlocking, separate plate 1 and plate 2 from both sides!

Step:20

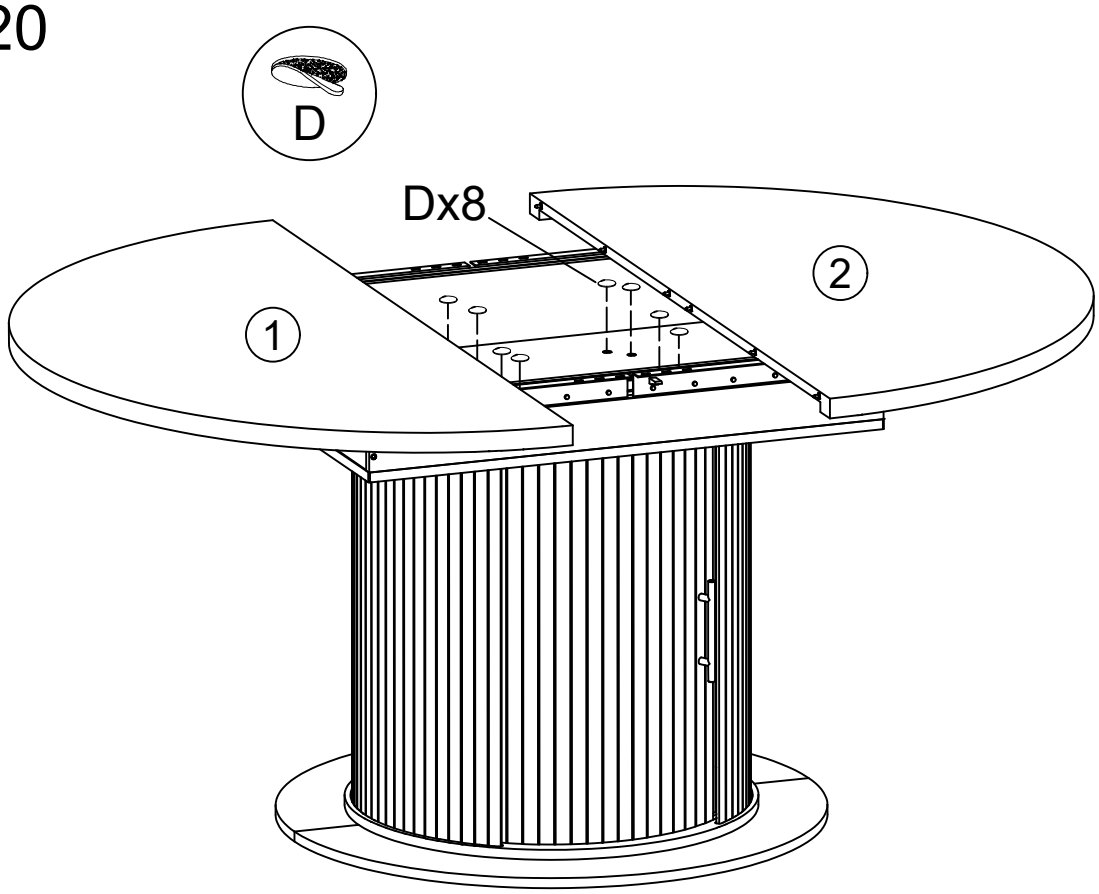

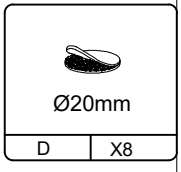

Step:21

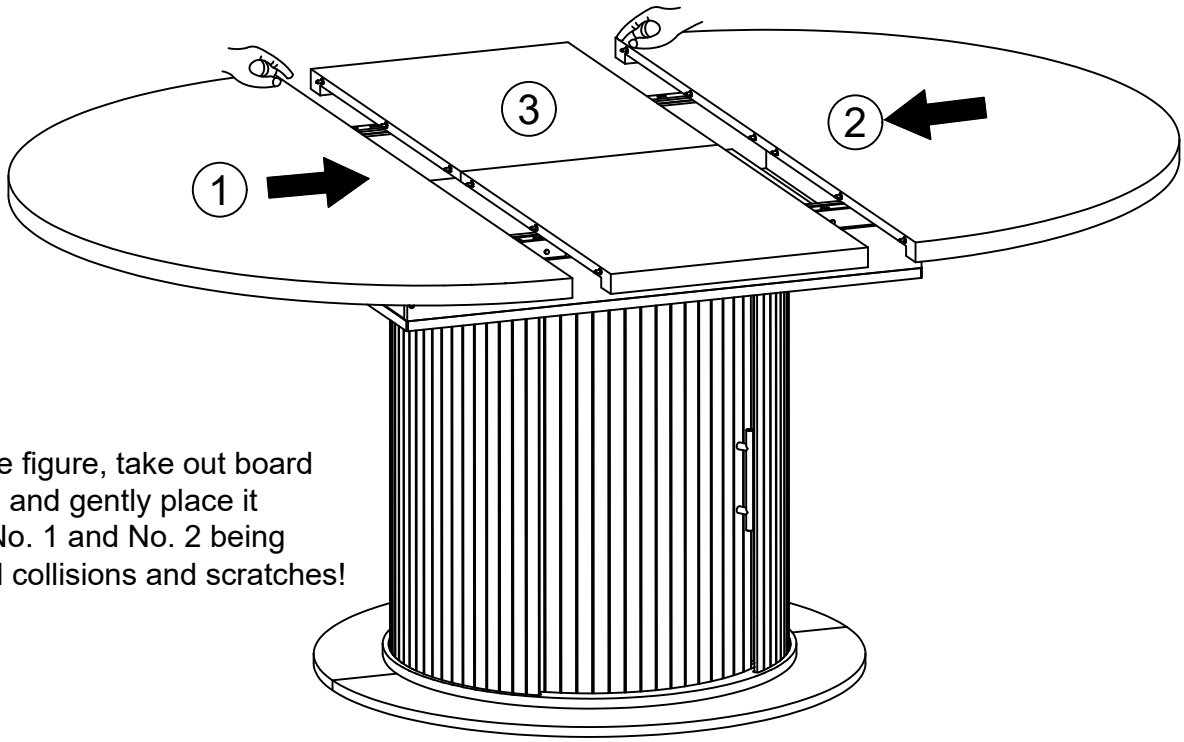

As shown in the figure, take out board No. 3, unfold it, and gently place it inside boards No. 1 and No. 2 being careful to avoid collisions and scratches!

