ZLINE

DUAL FUEL RANGE

Installation Guide and User Manual

ATTAINABLE **LUXURY®**

REGISTERING YOUR PRODUCT

SCAN ME

Please register your ZLINE appliance to activate your warranty. Begin the simple registration process by scanning the QR code.

By registering your appliance, you will have access to:

- Technical Support
- Warranty Service
- Tracking your support inquiries

⚠ WARNING: This product can expose you to chemicals including nickel, which is known to the State of California to cause cancer. For more information, go to www.P65Warnings.ca.gov.

ZLINE Kitchen and Bath provides Attainable Luxury, where the kitchen and bath of your dreams is never out of reach. Through our unique designs and unparalleled quality, we're dedicated to providing you an elevated experience in the heart of your home. With an endless selection of features and finishes, our inspiration is your reality.

ZLINE is fueled by a passion for innovation; A relentless pursuit of bringing the highest end luxury designs and professional features into everyone's homes. Because we continually strive to improve our products, we may change specifications and designs without prior notice.

C US

WARRANTY

COVERAGE

ZLINE Kitchen and Bath range products will be warrantied for one year from the original purchase date for the original purchaser of the product. This warranty covers all parts and labor for necessary repairs if any part of the product proves to be defective in materials or workmanship. The product must be deemed serviceable via troubleshooting with the ZLINE Kitchen and Bath service team. All service on ZLINE Kitchen and Bath range products under the above warranty must be performed by ZLINE approved and certified service, unless otherwise specified by ZLINE Kitchen and Bath. Service will be provided during normal business hours.

TERMS

This warranty applies only to the original purchaser of a range product installed for normal residential use. This is defined as a single-family, residential dwelling in a non-commercial setting. Commercial settings include but are not limited to: schools, churches, hotels, restaurants, vacation rentals such as Airbnb, day care centers, private clubs, fire stations, common areas in multi-family dwellings, nursing homes, food service locations, and institutional food service locations such as hospitals or correction facilities. This warranty is non-transferable and will not be extended based on the date of installation. The warranty applies only to products installed in the continental United States and the District of Columbia.

Failure to secure certified warranty service per these terms will result in a forfeiture of the remaining warranty. Out of pocket payments will not be reimbursed unless prior approval is received from ZLINE Kitchen and Bath and/or our service contract partner. Unapproved out of pocket payments for service will not be reimbursed. All warranty procedures must be followed to maintain warranty coverage.

Warranty shall not apply and ZLINE Kitchen and Bath is not responsible for damage resulting from negligence, improper maintenance, misuse, abuse, alteration of or tampering with the appliance, accident, natural disaster, improper electric supply, flare-up fires, unauthorized service or repair, improper installation, or installation not in accordance with the instructions contained in the manual, or the local codes.

WARRANTY

WHAT IS NOT COVERED

1. Installation or start-up, damages or problems caused by improper installation or use.
2. Improper liquid propane conversion or damage related to improper liquid propane conversion.
3. Cook top burner flame adjustments or related complaints.
4. Service by an unauthorized service providers or damage related to unauthorized service or unauthorized parts.
5. Installation in any commercial or non-residential application.
6. Corrections regarding normal adjustments or settings, or local gas supply issues resulting in low gas pressure or other issues.
7. Removal or re-installation cost.
8. Aesthetic damage, scratches, or natural wear caused by normal use.
9. Second-hand, open box products or products purchased from an unauthorized retailer.
10. Service for gas pressure issues related to installation at high altitudes. A high-altitude pressure regulator must be sourced by the customer.

NOTE: In the event that service is dispatched, and it is discovered that the reported issue is not covered under warranty based on the disclaimers above, the customer will be responsible for all service fees. Failure to pay these fees will result in the forfeiture of remaining warranty coverage.

TABLE OF CONTENTS

IMPORTANT SAFETY INSTRUCTIONS	1
WARRANTY AND SERVICE	3
PRODUCT DIMENSIONS	4
BEFORE INSTALLATION	5
INSTALLING THE LEGS	7
INSTALLING THE CHAINS	8
INSTALLATION REQUIREMENTS	9
POWER RATING & ELECTRICAL CONNECTION	11
GAS CONNECTION	13
GAS CONVERSION PROCEDURE	18
INSTALLATION CHECKLIST	21
FINAL PREPARATION	21
ROOM VENTILATION	22
COOKTOP COOKING	22
USING THE OVEN	26
MAINTAINING YOUR RANGE	30

TABLE OF CONTENTS

CHANGING DOORS	31
TROUBLESHOOTING	32

IMPORTANT SAFETY INSTRUCTIONS

WARNING An air curtain or other overhead range/cooktop hood, which operates by blowing downward airflow onto the range, shall not be used/installed in conjunction with this gas range.

- The manufacturer will not be responsible for any damage to property or to persons caused by incorrect installation, improper use of the appliance, or failure to heed the warnings listed.
- The manufacturer reserves the right to make changes to its products when considered necessary and useful, without affecting the essential safety and operating characteristics.
- This appliance has been designed for non-professional, domestic use only.
- Do not place any pot or pan on the open oven door. The door is made of glass and can break under the weight.
- Before beginning installation, please read these instructions completely and carefully.
- Please observe all local, state and national codes and ordinances. Please ensure the range is properly grounded. The installer should leave these instructions with the consumer who should retain for local inspectors use and for future reference. The plug should always be accessible. Installation must conform with local codes or in the absence of codes, the National Fuel Gas Code NSIZ223. 1/NFPA54. Electrical installation must be in accordance with the National electrical code ANSI/NPA70-latest edition and/or local codes. In Massachusetts: Installation must be performed by a "Massachusetts" licensed plumber or gasfitter. A "T" handle type manual gas valve must be installed in the gas line connected to this appliance. In Canada: Installation must be in accordance with the current CAN/CGA-fe 149.1 National gas installation code or CAN/CGA-B 149.2, Propane installation code and/or local codes. Electrical installation must be in accordance with the current CSA C22.1 Canadian electrical codes Part 1 and/or local codes.
- The installation of appliance designed for manufactured (mobile) home installation must conform with the Manufactured Home Construction and Safety Standard,Title 24CFR,Part 3280 [formerly the Federal Standard for Mobile Home Construction and Safety,Title 24,HUD(Part280)] or with local codes where applicable.

IMPORTANT SAFETY INSTRUCTIONS

- Installation of any gas-fired equipment should be made by a licensed plumber. A manual gas shut-off valve must be installed in the gas supply line ahead of the oven in the gas flow for safety and ease of service.
- Please ensure that the altitude of your home is conducive for the use of gas cooking products. If the product is installed at higher altitudes above sea level, you may experience issues with gas pressure that will affect product performance. Please consult your local gas company for recommendations before purchasing or installing
- Please read and follow these important instructions for the safety of your home and the people living in it.

WARNING If the information in this manual is not followed exactly, a fire or explosion may result causing property damage, personal injury, or death.

- Do not store or use gasoline or any other flammable substances in the vicinity of this or any other appliance.
- NEVER cover any slots, holes, or passages in the oven bottom or cover an entire rack with materials such as aluminum foil. Doing so blocks air flow through the oven and may cause carbon monoxide poisoning. Aluminum foil linings may also trap heat, causing a fire hazard.

WARNING Never use this appliance as a space heater to heat or warm the room. Doing so may result in carbon monoxide poisoning and overheating of the oven.

WHAT TO DO IF YOU SMELL GAS

- DO NOT light any appliance.
- DO NOT touch any electrical switch.
- DO NOT use any phone in your building.
- DO NOT use any aerosol cans or combustibles.
- Move a safe distance away from the area and call the gas supplier. Follow the gas supplier's instructions.
- In the case you cannot reach the gas supplier, call the fire department.
- Installation and service must be conducted by a qualified installer, service agency, or the gas supplier.

WARRANTY AND SERVICE

Please keep this manual for future use.

The rating tag shows the model and serial number of your range. The tag is located under the front edge of the range cooktop. The tag is visible when the oven door is open. Do not remove permanently affixed labels, warnings, or plates from the product. This will void the warranty.

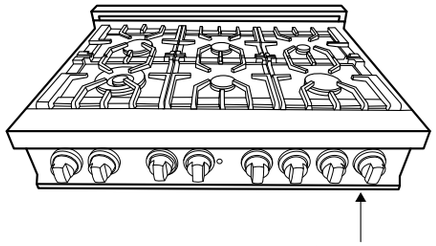

Appliance Tag Here

WARRANTY AND SERVICE

All range products carry a one year parts warranty and includes service, if required. Service on all products shall be carried out by industry professionals only. For warranty service, please call customer service.

REPLACEMENT PARTS

Only authorized replacement parts may be used in performing service on this appliance. Replacement parts are available from ZLINE. Call 1-614-777-5004.

BEFORE INSTALLATION

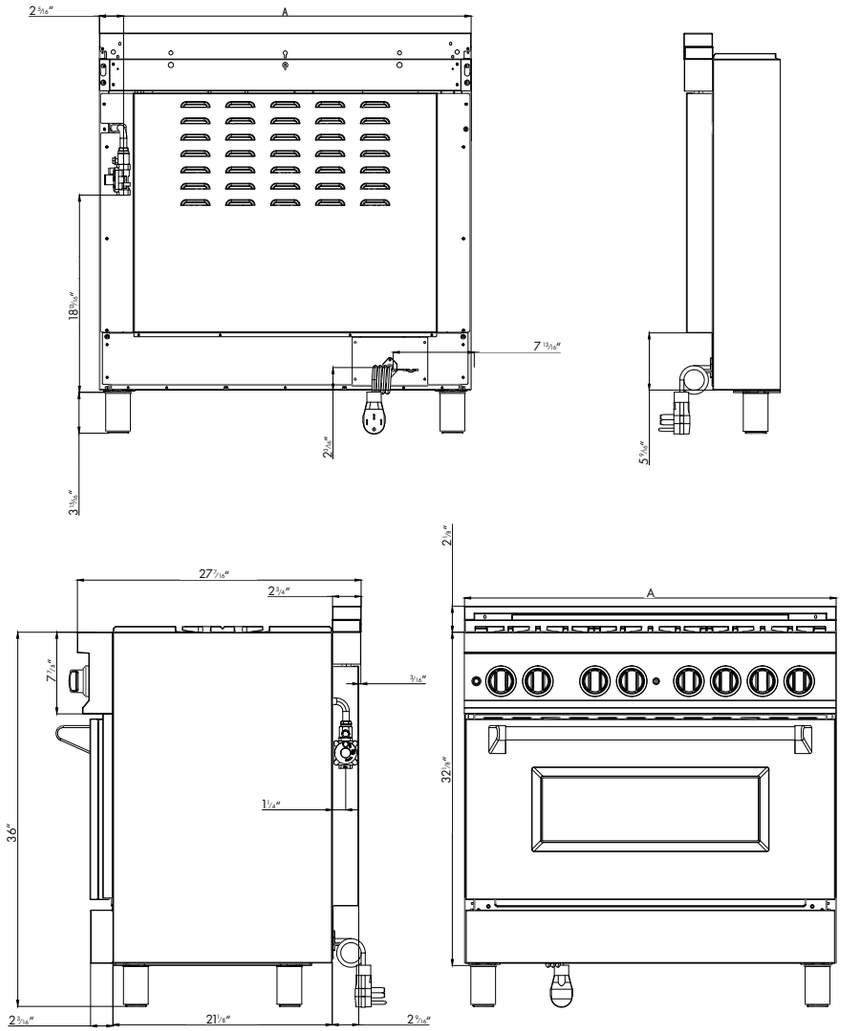

"A" will change with size of range (24"-60").

BEFORE INSTALLATION

- This appliance shall only be installed by an authorized professional.
- The appliance shall be installed in accordance with the standards of the country where it will be installed. The installation of this appliance must conform to local codes and ordinances. In the absence of local codes installation must conform to American National Standards, National fuel Gas code ANSI Z223.1-Latest edition/NFPA 54 or B 149.1.
- The appliance, when installed, must be electrically grounded in accordance with local codes or, in the absence of local codes, with the National Electrical code, ANSI/NFPA 70.
- **In Canada:** Installation must be in accordance with the current The Natural Gas and Propane Installation code, CAS B149.1. and/or local codes. Electrical installation must be in accordance with the current CSA C22.1 Canadian Electrical Codes Part 1 and/or local codes.
- If local codes permit, a flexible metal appliance connections with the new AGA or CGA certified design, 3/4˝, is recommended for connecting this appliance to the gas supply line. DO NOT bend or damage the flexible connector when moving the appliance.
- This appliance must be used with the pressure regulator provided. The regulator must be properly installed in order to be accessible when the appliance is installed in its final location. The pressure regulator must be set for the type of gas to be used. The pressure regulator has 1/2" connection female pipe thread. The appropriate fitting must be determined based on the size of your gas supply line, the flexible metal connector and the shut-off valve.
- The appliance must be isolated from the gas supply piping system by closing its individual manual shut-off valve during any pressure testing of the gas supply piping system at test pressures equal to or less than 1/2 PSI.
- All opening holes in the wall and floor, back and under the appliance shall be sealed before installation of the appliance.
- A manual valve shall be installed in an accessible location in the gas line external to the appliance for the purpose of turning on and shutting off the gas to the appliance.

WARNING Do not use aerosol sprays in the vicinity of this appliance while it is hot.

BEFORE INSTALLATION

ROOM VENTILATION

An exhaust fan may be used with the appliance; in each case it shall be installed in conformity with the appropriate national and local standards. Exhaust hood operation may affect other vented appliances; in each case it shall be installed in conformity with the appropriate national and local standards.

TYPE OF GAS

This appliance is shipped from the factory for use with natural gas. For use with propane LP gas, please follow the conversion procedure described on page 18. A step by step conversion procedure is also included with each set of LP gas nozzles.

GAS PRESSURE

- The maximum inlet gas supply pressure incoming to the gas appliance pressure regulator is 1/2 PSI.
- The minimum gas supply pressure for checking the regulator setting shall be at least 1˝ w.c (249 Pa) above the inlet specified manifold pressure to the appliance (This operating pressure is 4˝ w.c. (1.00kPa) for Natural gas and 11˝ w.c. (2.75 kPa) for LP gas.
- Gas cooktop requires 1"- 6" side wall spacing above the counter height for proper combustion. Please review specific model installation instructions for required dimensions. 30 inches between the cooktop and bottom of the cabinet above. 0.25 inches for sides below countertop height.

NOTE: Please consult your local building codes for variations with installation.

INSTALLATION

The ranges must be used with the legs properly installed. Height-adjustable legs are shipped with the range in a foam container above the range.

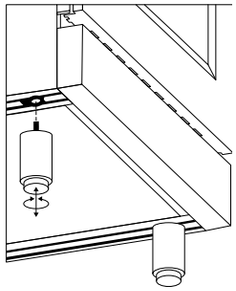

1. Before installing the legs, position the appliance near its final location, as the legs are not suitable for moving the appliance over long distances.
2. After unpacking the range, raise it enough to insert the legs in the appropriate receptacles situated on the lower part of the appliance. Lower the range gently to keep any undue strain from legs and mounting hardware.
3. Adjust leg height to the desired level by twisting the inside portion of the leg assembly until the proper height is reached. Check with a level that the cooktop is perfectly level.

INSTALLING THE SQUARE COVERS

Some ranges come with attachable square leg covers. To install, loosen the round leg from the range to accommodate for the square leg. Align the top of the square leg (with the slit) to the top of the round legs and slide in. Adjust the square leg and the round leg until they are flushed with the ground.

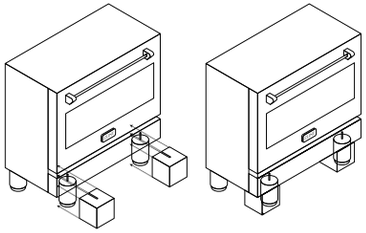

NOTE: If the range is not level, the cooking will be uneven. When adjusting the legs, ensure they are the same height.

INSTALLATION

INSTALLING THE CHAINS

The chains shipped with the range must be properly secured to the rear wall. The height of the bracket from the floor must be determined after the range legs have been adjusted to the desired height and after the range has been leveled. If the chain length is too short to properly secure the range to the rear wall, ask the installer to lengthen it.

WARNING A child or adult can tip the range and be fatally injured; Adjust the chains if the range is moved. Failure to do so can result in death or serious injury.

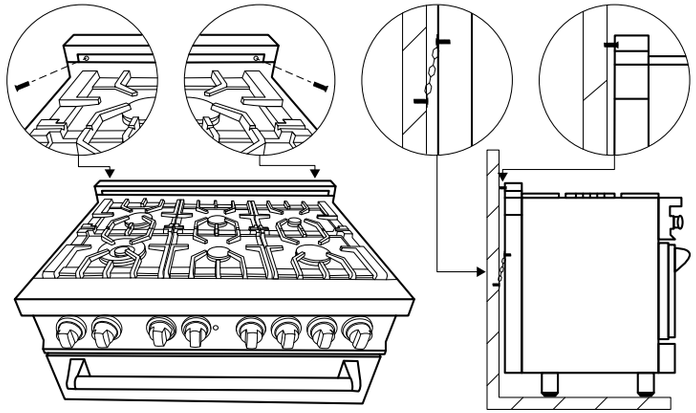

1. Measure the distance from the floor to the where the chains connect on the back of the appliance.
2. Position the ends of the chains on the wall at the desired height plus 1/8 (0.32 cm). The chains must be placed at 2 5/16” (6.0 cm) from the side of the range. The distance between the two chains is 25 1/4 “(64.1 cm).
3. Secure the ends of the chains to the wall with appropriate hardware.
4. Slide the range against the wall.
5. Check to see that the chains are connected properly. Then grasp the top rear edge of the range and carefully attempt to tilt it forward. Verify that the chains are engaged.
6. Or tighten the chains up with fixed screws on the wall. If the wall is not suitable for installation, then the chains should be fixed to the cabinet structure.

INSTALLATION

A properly grounded and horizontally-mounted electrical receptacle type NEMA 14-50P should be installed no higher than 3″ above the floor, no less than 2″ and not more than 8″ from the left side (facing product); refer to electrical connection section.

GAS

- An agency-approved, properly-sized manual shut-off valve should be installed no higher than 3″ above the floor and no less than 2″ and no more than 8″ from the right side (facing product).
- To connect gas between shut-off valve and regulator, use agency-approved, properly sized flexible or rigid pipe. Check all local code requirements.

INSTALLATION ADJACENT TO KITCHEN CABINETS

- The range may be installed directly adjacent to existing countertop height cabinets (36″) from the floor.
- For the best look, the worktop should be level with the cabinet countertop. This can be accomplished by raising the unit using the adjustment spindles on the legs.
- **ATTENTION:** The range CANNOT be installed directly adjacent to kitchen walls, tall cabinets, tall appliances, or other vertical surfaces above 36″ high. The minimum side clearance in such cases is 6″.
- Wall cabinets with minimum side clearance must be installed 18″ above the countertop with countertop height between 35.5″ and 37.25″. The maximum depth of wall cabinets above the range shall be 13″.

INSTALLATION

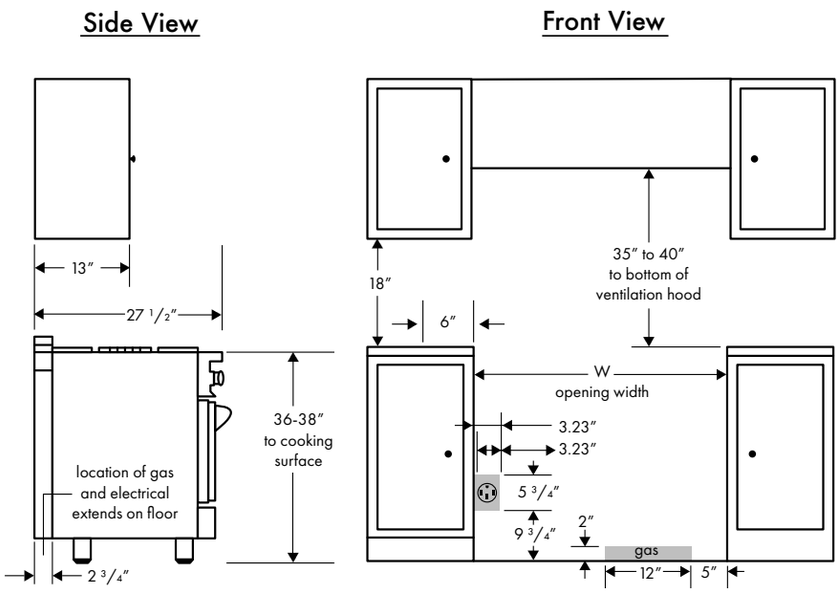

EXTERNAL DIMENSIONS:

24″ Model: 24″W x 27.4″D x 36″H
30″ Model: 30″W x 27.4″D x 36″H
36″ Model: 36″W x 27.4″D x 36″H
48″ Model: 48″W x 27.4″D x 36″H
60″ Model: 60″W x 27.4″D x 36″H

INTERNAL DIMENSIONS

24″ Model: 18.5″W x 18.5″ D x 14″H
30″ Model: 26.5″W x 18.5″D x 14″H
36″ Model: 30.5″W x 18.5″D x 14″H
48″ Model: 26.5″W/12.5″W x 18.5″D x 14″H
60″ Model: 30.5″W/18.5″W x 18.5″D x 14″H

INSTALLATION

ELECTRIC POWER RATING

24"
240 VAC
NEMA 14-50P (50 AMP plug)
20A

30"-36"
240 VAC
NEMA 14-50P (50 AMP plug)
15A

48"
240 VAC
NEMA 14-50P (50 AMP plug)
30A

60"
240 VAC
NEMA 14-50P (50 AMP plug)
40A

INSTALLATION

Four-Wire Connection Receptacle
NEMA 14-50R

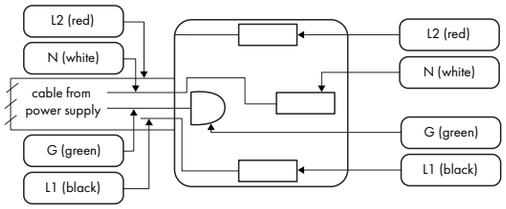

ELECTRICAL GROUNDING

Our oven is equipped with a four-prong plug for your protection against shock hazard and should be plugged directly into a properly grounded receptacle. Do not cut or remove the prong from this plug.

WARNING

Disconnect electrical power at the circuit breaker box or fuse box before installing the appliance.

Provide appropriate ground for the appliance. Use copper conductors only.

No attempt should be made to operate the appliance during power failure.

INSTALLATION

GAS CONNECTION

- All gas connections must comply with national and local codes. The gas supply line (service) must be the same size or greater than the inlet line of the appliance. This range uses a ½″ NPT inlet. Use appropriate sealant on all pipe joints that are resistant to gas.
- This range can be used with Natural or LP/propane gas. The range is shipped from the factory for use with natural gas.
- For LP/Propane household installation, the appliance must be converted by the dealer, factory-trained professional, or qualified licensed plumber or gas service company.
- Gas conversion is important for safe and effective use of the appliance. It is the responsibility of the dealer and the owner of the range to perform the appropriate gas conversion following the directions of the manufacturer.
- The gas conversion procedure is described in this manual and in the package containing the conversion nozzles shipped with every range.
- Please provide the service person with this manual before work is started on the range.

WARNING DO NOT use an open flame when checking for leaks.

Leak testing of the appliance shall be conducted according to the manufacturer's instructions. Before placing the oven into operation, always check for leaks with soapy water solution or other acceptable method. Check for gas leakage with soapy water solutions on all gas connections between inlet gas pipes of the appliance, the gas regulator and, the manual shut-off valve. Bubbles will form with a soapy water solution if there is a leak.

INSTALLATION

MANUAL SHUT-OFF VALVE

- This valve is not shipped with the appliance and must be provided by the installer.
- The manual shut-off valve must be installed in the gas service line between the gas hook-up on the wall and the appliance inlet, in position where it can be reached quickly in the event of an emergency.
- **In Massachusetts:** A T handle type manual gas shut-off valve must be installed in the gas supply line to this appliance.

FLEXIBLE CONNECTIONS

- In case of installation with flexible couplings and/or quick-disconnect fittings, the installer must use a heavy duty, AGA design-certified commercial flexible connector of at least ½″ (1.3cm) IF NPT (with a suitable strain relief in compliance with ANSI Z21.41 and Z21.69 standards.
- **In Massachusetts:** The unit must be installed with a 36″ (3 foot long) flexible gas connector.
- **In Canada:** Use CAN 1-6. 10-88 metal connectors for gas appliances and CAN 1-6.9 M79 quick disconnect device for use with gas fuel.

PRESSURE TEST POINT STOPPER VALVE

To avoid gas leaks, the pressure test-point stopper valve and gasket supplied with the range must be installed on the gas fitting at the back of the range according to the diagram below.

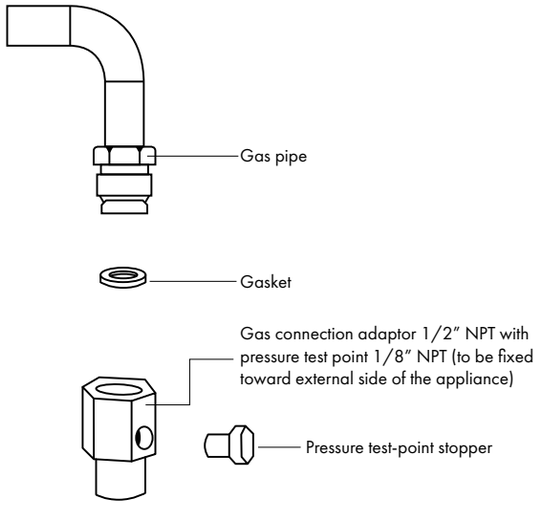

INSTALLATION

PRESSURE REGULATOR

Since service pressure may fluctuate with local demand, every gas cooking appliance must be equipped with a pressure regulator on the incoming service line for safe and efficient operation.

Pressure Regulator

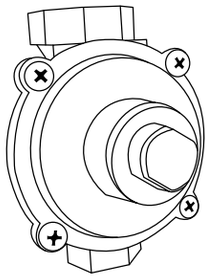

- The pressure regulator shipped with the appliance has two female threads 1/2" NPT. The regulator shall be installed properly in order to be accessible when the appliance is installed in its final position.
- Manifold pressure should be checked with a manometer and comply with the values indicated below.

  Natural Gas->4.0"W.c.P
  L P/Propane-> 10.0" W.c.P

- Incoming line pressure upstream from the regulator must be 1 ˝ W.C.P. higher than the manifold pressure in order to check the regulator.
- The regulator used on this range can withstand a maximum input pressure of ½ PSI (13.8 ˝ W.C or 3.5kPa) If the line pressure exceeds that amount, a step down regulator is required.
- The appliance, its individual shut-off valve, and the pressure regulator must be disconnected from the gas line during any pressure testing of that system at pressures in excess of ½ PSI (13.8 ˝ W.c or 3.5kPa).

WARNING

Before carrying out this operation, disconnect the appliance from gas and electricity.
Gas conversion shall be conducted by a factory-trained professional.

INSTALLATION

The gas conversion procedure for this range includes:

1. Pressure Regulator
2. Surface Burners
3. Flame Adjustment

The conversion is not finished if all steps are not completed.
Before performing the gas conversion, locate the package containing the replacement nozzles, which has a number indicating its flow diameter printed on the body. Consult the table below for matching nozzles to burners.

Save the nozzles removed from the range for future use.

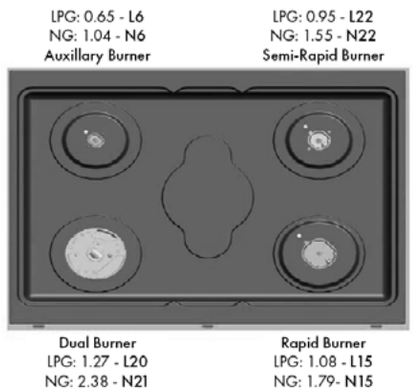

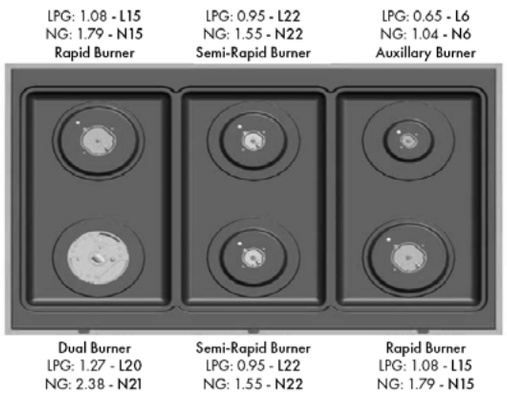

LPG: Liquid Propane Gas
NG: Natural Gas

INSTALLATION

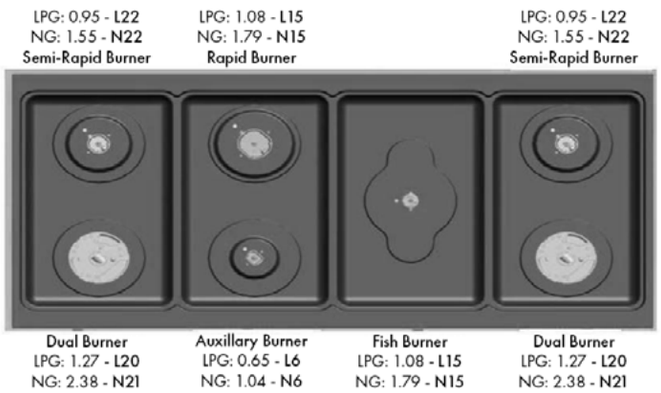

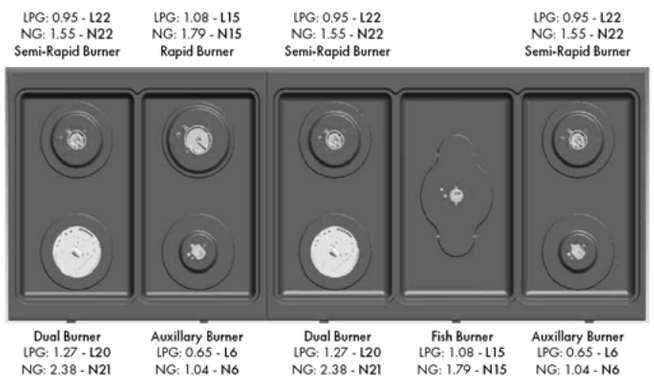

SCAN ME

Propane Conversion Video

INSTALLATION

STEP 1: PRESSURE REGULATOR

The pressure regulator supplied with the appliance is a convertible type pressure regulator for use with Natural Gas at a nominal outlet pressure of 4″ w.c. or LP gas at a nominal outlet pressure of 11″ w.c. and it is pre-assembled from the factory to operate with one of these gas pressure as indicated in the labels affixed on the appliance, package, and instruction booklet.

To convert the regulator for use with other liquid propane LP gas:

1. Unscrew the front cap of the regulator (as seen below.) Inside the cap is a screw. By hand, remove the screw to reveal a spring. Reapply the screw to the cap with the spring revealed.
2. With the spring sticking out of the cap, reapply back to the regulator.

WARNING

Any issues related to improper propane conversion are NOT covered under warranty.

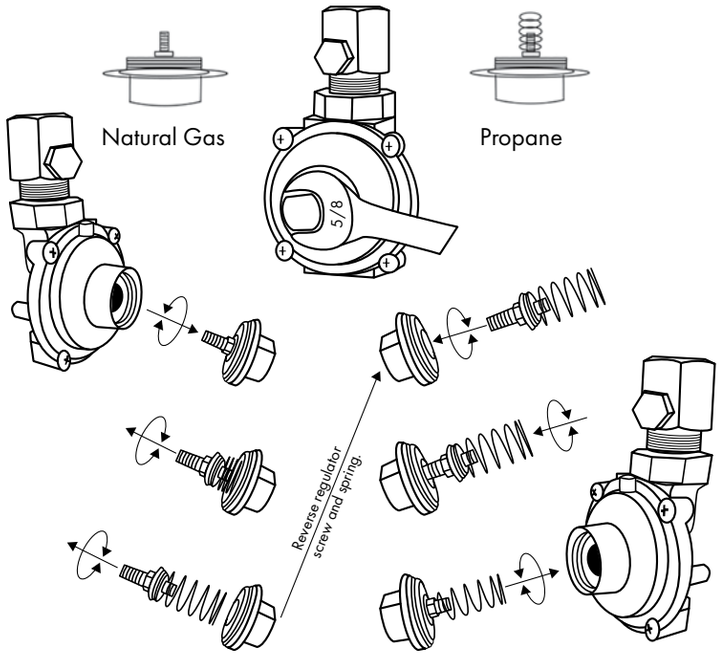

INSTALLATION

STEP 2: SURFACE BURNERS

1. To replace the nozzles of the surface burners, lift up the burners and unscrew the nozzles shipped with the range using a 7 mm (socket wrench).
2. Replace nozzles using the conversion set supplied with the range. Each nozzle has a number indicating its flow diameter printed on the body. Consult the table on page 16 for matching nozzles to burners.

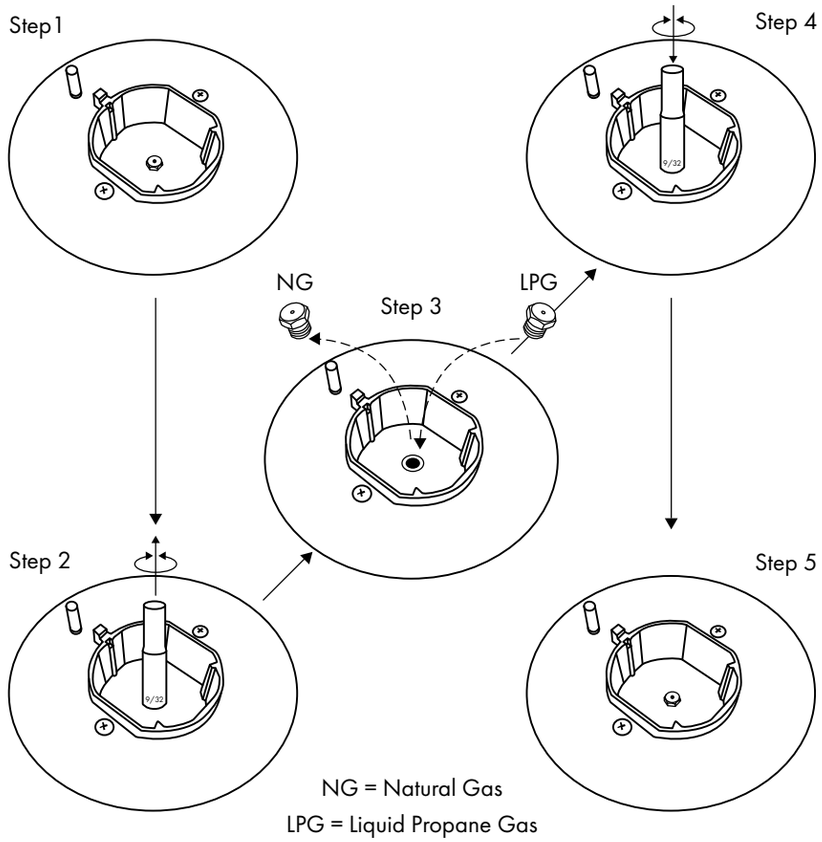

INSTALLATION

STEP 3: FLAME ADJUSTMENT

1. Light one burner at a time and set it to the MINIMUM position (small flame).
2. Remove the knob.
3. The range is equipped with a safety valve. Using a small-size flathead screwdriver, locate the choke screw (see diagram below) and turn to the right or left until the burner flame is adjusted to desired minimum.
4. Make sure that the flame does not go out when switching quickly from the MAXIMUM to the MINIMUM position.

The high flame setting cannot be adjusted to be lower. If the height is too high, revisit the conversion set up. A step may have been missed.

SCAN ME

SCAN ME

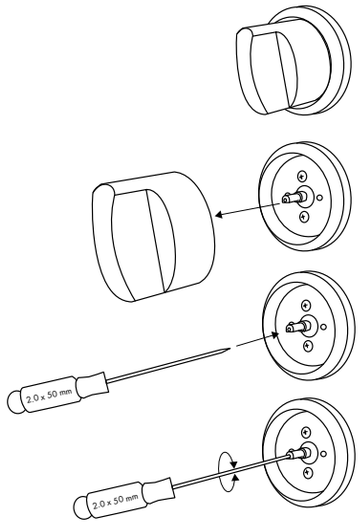

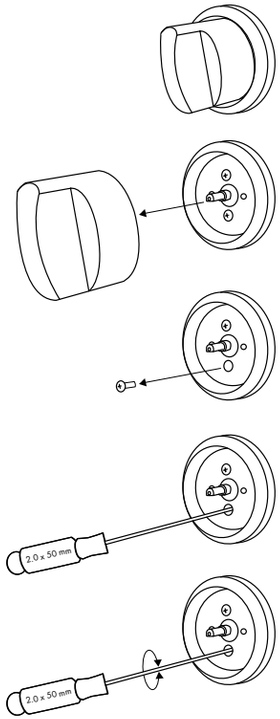

INSTALLATION

INSTALLATION CHECKLIST

1. Is the range mounted on its legs?
2. Is the back guard securely connected?
3. Have the chains been properly installed?
4. Does the clearance from the side cabinets comply with the manufacturers' direction?
5. Is the electricity properly grounded?
6. Is the gas service line connected following the directions of the manufacturer?
7. Have all the proper valves, stoppers, and gaskets been installed between the range and the service line?
8. Has the gas connection been checked for leaks?
9. Has the range been setup for the type of gas available in the household? (propane or natural gas)
10. Does the flame appear sharp blue with no yellow tipping?
11. Has the minimum setting for all burners been adjusted?
12. Have the cooktop flames been adjusted to customer preference?
13. Are the oven burners/elements installed properly and functioning?

FINAL PREPARATION

- All stainless steel body parts should be wiped with hot, soapy water and with a stainless steel cleanser.
- If build-up occurs, do not use steel wool, abrasive cloths, cleaners, or powders. If it is necessary to scrape stainless steel to remove encrusted materials, soak with hot, wet cloths to loosen the material, and then use a wood or nylon scraper. DO NOT use a metal knife, or any other metal tool to scrape stainless steel! Scratches are almost impossible to remove.
- Before using the oven for food preparation, clean thoroughly with a warm soap and water solution to remove film residues and any dust or debris from installation, then rinse and wipe dry.

OPERATION

ROOM VENTILATION

The use of a gas cooking appliance generates heat and humidity in the room where it is installed. Proper ventilation in the room is needed. Make sure the kitchen is equipped with a range hood of appropriate power (400 CFM minimum). Activate the exhaust fan/range hood when possible. Intensive and continuous use of the appliance may require additional ventilation, for example, by opening a window.

COOKTOP COOKING

Never pour cold water onto hot surfaces in a hot oven. The steam created could cause serious burns or scalding and the sudden change in temperature can damage the enamel in the oven.

We recommend that before you cook in your new cooker you heat the oven to 380°F for 2 hours to run in BAKE mode. After the oven cools, wipe it out with hot water and a mild detergent. We also recommend cleaning the racks and shelves before use.

When using the cooker for the first time you may notice the following:

1. There may be a smell. This is quite normal when the cooker is first heated as residual oil from production of parts will be burnt off quickly.
2. There may be noises. This is also quite normal as new parts move and settle into place during the initial heating process.

- This product is intended for the cooking of food and must not be used for other purposes.
- Unstable or deformed pans should not be placed on the burners or hot plates in order to avoid accidents caused by spill over.
- Particular care should be taken when cooking with oil or fat.
- Always ensure that the knobs are in the "O" Off or Stop position when the appliance is not in use.
- Before maintenance and cleaning, disconnect the appliance and allow cooling down. For reasons of hygiene and safety this appliance must always be kept clean.

OPERATION

- Take care when using cleaning products in spray form: never direct the spray onto the electrical wiring, thermostat and bulb.
- Any food or liquid spills in the bottom of the oven must be cleaned up before cooking in order to avoid unpleasant smoke and/or the possibility of fire.
- Ensure that air can circulate around the gas appliance. Poor ventilation can result in lack of oxygen and extinguish the flame.
- The use of a gas cooking appliance produces heat and humidity in the room where it is installed.
- Ensure good ventilation of the room, keep adequate natural ventilation or install an extractor hood with a discharge tube.
- In case of doubt, ask installer for advice.
- Supply the appliance with the type of gas stamped on the relevant label situated in the immediate vicinity of the gas connection tube.
- The appliance is heavy, move it carefully.
- To facilitate ignition, light the burners before placing pans on the grid.
- Check that the flame is regular.
- Always lower the flame or turn it off before removing the pan

OPERATION

SURFACE BURNER OPERATION - ELECTRIC IGNITION

To activate the electric ignition, simply turn the control knob counter-clockwise to maximum power, then press the knob in to start the flow of gas and the ignition spark. The spark will be released at the metal tip of the white ceramic pin located on the side of the burner. Once the flame is on, release the control knob gently. If the flame turns off, simply repeat the above procedure.

WARNING DO NOT ignite the burners if the black burner cap is not installed or not centered, the flame will be irregular.

MANUAL IGNITION

Manual ignition is always possible even when the power is cut off or in the event of a power failure. Turn the control knob counter-clockwise to the MAXIMUM position; light the flame with a kitchen lighter or with a match.

USING THE BURNERS CORRECTLY

WARNING Keep children at a safe distance from the appliance during operation. DO NOT allow children to operate the appliance!

1. Always check that the burner caps are properly installed before operation:

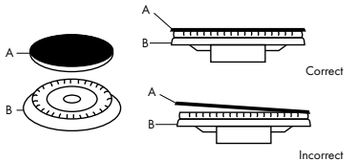

2. Verify that the flame of the worktop burners is completely blue and with a regular aspect as shown below:

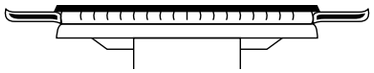

3. Never let flames wrap around cookware.

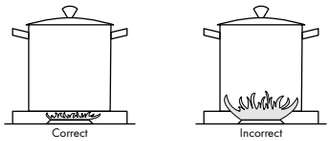

ZLINE cast iron griddle (only available on 48" size) comes pre-seasoned. Regularly seasoning the griddle is recommended.

OPERATION

Be sure to set all worktop/oven/broiler burner controls to the OFF position after each use of the appliance.

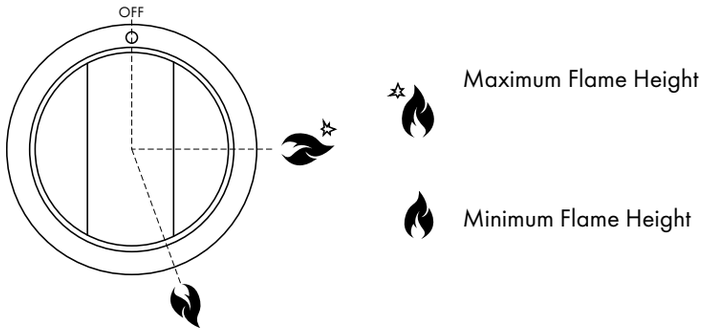

Maximum temperature setting/recommended control knob position for burner ignition.

The regulating knobs should be turned in anti-clockwise direction until the small flame symbol, vice-versa for the larger flame symbol. To light up the burner, keep pushing the knob and turn it anti-clockwise to maximum, and hold it for 3 to 5 seconds. The ignition will spark and ignite the burner. At this position, the gas supply is at the maximum and the flame also at its maximum. You can reduce the flame size by turning the knob in anti-clockwise direction. Should the burner fail to light up, turn the knob to its original position and try again. Your burner flame should be blue in color.

NOTE: When igniting a burner, all burners will spark, but only the burner's knob you are using will ignite the flame.

NOTE: When first used, the gas burner will not ignite immediately. Time is required for the LPG to fully fill the operating system.

NOTE: System cooling fan will run on all oven settings when it is in use.

WARNING

The flame color should always be blue. Flickers of orange and yellow are acceptable. If flames appear orange or yellow and stay that way, check the surrounding area. Candles, cleaning products, and other changes in atmosphere can affect the flame color.

OPERATION

OVEN FUNCTION SELECTORS - RA/RAB/RAS MODELS

The temperature dial must be set to the preferred temperature and the baking dial must be set to the preferred cooking function.

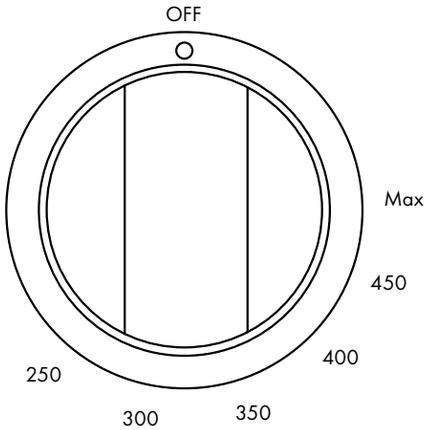

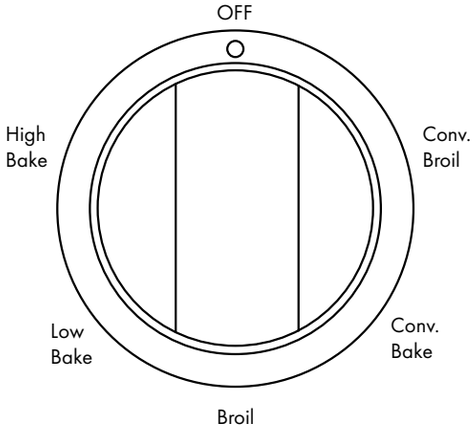

OPERATION

USING PANS CORRECTLY

1. Always ensure that the bottom and handles of pans do not protrude over the worktop.
2. When cooking with flammable fat, such as oil, do not leave the range unattended.
3. Use pots of the appropriate size on each burner.
4. To avoid overflow when boiling liquids, turn knob to the minimum heat.
5. Always use pots with matching lids.
6. Dry the bottoms of pans before operation.

OVEN COOKING

1. Use care when opening door. Let hot air or steam escape before removing or placing food.
2. DO NOT heat unopened food containers. Pressure build-up may cause container to burst and result in injury.
3. Keep oven vent ducts unobstructed.

PLACEMENT OF OVEN RACKS

1. Always place oven racks in desired location while oven is cool. If rack must be moved while oven is hot, DO NOT let potholder make contact with heating element in oven.
2. DO NOT CLEAN DOOR GASKETS. The door gasket is essential for a good seal. Care should be taken not to rub, damage, or move the gasket.
3. DO NOT USE ABRASIVE OVEN CLEANERS. No commercial oven cleaner or liner protective coating of and kind should be used in or around any part of the oven. Clean only the parts listed in the manual, before cleaning the oven, remove broiler pan and other utensils.
4. In case of electric power failure reset oven/broiler controls to the OFF position, do not attempt to use oven/ broiler until the power has been restored.

OPERATION

PLACEMENT OF OVEN RACKS CONTINUED

5. DO NOT TOUCH HEATING ELEMENTS OR INTERIOR SURFACE OF OVEN. Heating elements may be hot even though they are dark in color. Interior surfaces of an oven become hot enough to cause burns. During and after use, do not touch, or let clothing or other flammable materials come into contact with the heating elements or interior surfaces of the oven until they have had sufficient time to cool. Other surfaces of the appliance may become hot enough to cause burns, for example, oven vent openings and surfaces near these openings, oven doors, and oven glass window.
6. Take care to reset all worktop/oven/broiler burner controls to the OFF position after use of the appliance.

The ranges are equipped with commercial grade shelves and an enamel cooking tray. Shelves are mounted on the appropriate guides situated on the sides of the oven compartment. Insert the shelf between the top and bottom guide in any of the 5 positions available.

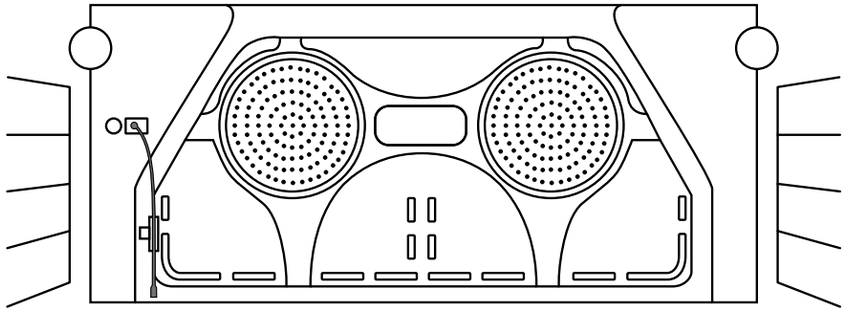

To keep the oven as clean as possible, cook on the tray.
When available, always follow recipe book directions. Personal experience will help to determine any variation in the values. In any case, it is recommended to follow the instructions of the specific recipe being used.

NOTE: If you have a griddle, you may want to clean it, but it does not need to be seasoned before use.

OVEN OPERATION GUIDE

- **Preheat/High Bake:** Use this setting for preheating the oven. This setting utilizes the center ring on the top heating element, the bottom heating element, and the convection fans.
- **Bake/Low Bake:** This setting uses only the bottom heating element. This setting is best for non-convection cooking.
- **Convection Bake:** This setting uses both the bottom heating element and convection fans.
- **Broil:** This setting uses only the top heating element.
- **Convection Broil:** This setting uses both the top heating element and the convection fans.

MAINTENANCE AND CLEANING

REPLACING THE OVEN BULBS

WARNING Disconnect the power before servicing the unit.

To replace the oven light bulb, unscrew the protection cap that projects out inside the oven.

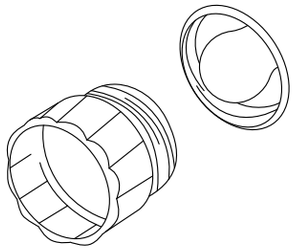

NOTE: Touching the bulb with your fingers may cause the bulb to burn out. Always use protective gloves or a clean cloth to remove the bulb.

CLEANING YOUR RANGE

WARNING During cleaning operation, never move the appliance from its original installation position. Never use abrasive cleaners! Scratches on the stainless steel surfaces are permanent. Do NOT clean the range when hot!

- **Cleaning after Installation:** Use a stainless steel cleaning product or wipe to eliminate the glue residues of the protection film after removal.
- **Cleaning the Worktop:** Periodically clean the burner heads, the cast iron pan supports, and the burner caps using warm water. Remove burner food and fat residues with a rubber spatula.
- **Cleaning Stainless Steel:** Use a stainless steel cleaner product with a soft sponge or cloth with a warm soap and water solution. Never use abrasive powders or liquids.
- **Cleaning the Burner Caps:** Lift the burner caps from the burner heads and wash them in a warm soap and water solution. Dry thoroughly before using them again. Before reinstalling them on the burner head, check that the gas flow holes are not clogged with food residues or cleaning products.

MAINTENANCE AND CLEANING

- **Cleaning Porcelain:** Porcelain parts should be cleaned frequently with warm soap and water solution applied with a soft sponge or wipe. Never use abrasive powders or liquids! Do not leave acid or alkaline substances on the porcelain parts (such as vinegar, lemon juice, salt, tomato sauce etc.) Use a rubber spatula to remove fat residues.
- **Cleaning Glass Door:** Clean the glass using a non-abrasive sponge or wipe with a warm soap and water solution. Use a rubber spatula to remove fat deposits. Install the pins into slots on each hinge (pins not included.)

WARNING

Door does not lock during cleaning.
Use caution.

CHANGING DOORS

1. Open oven door and insert removal pins in door hinge. Close door half way. Pull up and out on door to remove.
2. Uninstall the kick plate by unscrewing the four screws in the kick plate. There are two at the top and bottom on each side. Have a helper tilt the range to unscrew the bottom screws.
3. Remove kick plate.
4. Install new kick plate.
5. Reinstall the four previous screws from step 2.
6. Reinstall new oven door by reversing step 1. Place door hinges into slots of hinge base receivers, keeping the door in half closed position. The door will drop into the receiver base when proper engagement is achieved.
7. Open door to full open position slowly to verify proper operation. Remove hinge pins.

SCAN ME

Changing doors video

TROUBLESHOOTING

RANGE PROBLEM	POSSIBLE CAUSE AND/OR REMEDY
Range does not function	Range is not connected to electrical power. Check power circuit breaker, wiring, and fuses. If all electrical components are properly installed, call 614-777-5004 for help.
Broil does not work	Temperature control knob is rotated too far past broil position (500°F); preheating indicator will light intermittently.
Burner does not ignite	Gas supply valve is in the "OFF" position or gas supply is interrupted.
Igniter barely sparking, no flame ignition	Burner ports are clogged or the unit is not set to the appropriate gas type. Call 614-777-5004 for help.
Burner ignites but flame is large, distorted, or yellow	The air quality of the room is affecting the flame color. Ensure that there are no candles, cleaning products, etc. in the room.
Oven is not heating	Check the circuit breaker or fuse box to your house. Make sure there is proper electrical power to your oven.
Oven light is not working properly	Replace or reinsert the light bulb if loose or defective.
Oven has soot in it	If the range is on propane, make sure that both the orifices and the regulator have been converted.
Cannot remove lens cover on light	There may be soil or build up on the lens cover. Wipe the lens cover with a clean, dry towel prior to attempting to remove the lens cover.
Low flames and longer cooking times	The propane conversion procedure may not have been performed properly. Check that all orifices are correctly placed. If not, contact your installer.
Brass burners changed color	Brass burners naturally oxidize over time and form a patina that is a beautiful deep brass hue. This process ensures our brass burners are corrosion resistant and is not cause for a return.
Cooktop burner's low/simmer flame setting is too high	The propane conversion procedure may not have been performed properly, as all burners should have been adjusted during installation with the flame adjustment tool that comes with each range. See page 20 for how to adjust the burner flame's height.

2.4.0

ZLINE

ATTAINABLE **LUXURY®**

www.zlinekitchen.com
1-614-777-5004