safety glazing
certification council

Administrative Office, AMS, Inc.
205 West Main Street, PO Box 730
Sackets Harbor, NY 13685
Phone: (315) 646-2234
E-mail: SGCC@amscert.com

ANAB
ANSI National Accreditation Board
ACCREDITED
ISO/IEC 17065
PRODUCT CERTIFICATION BODY
#0961

ACKNOWLEDGEMENT OF CERTIFICATION

THIS IS TO ACKNOWLEDGE THAT AS OF THIS DATE

Zhongshan Walle Glass Product Co., Ltd
Zhongshan, Guangdong Province

IS A CURRENT LICENSEE AND HAS MET ALL GUIDELINES AND REQUIREMENTS FOR THE SGCC® CERTIFICATION PROGRAM AND AS SUCH IS ELIGIBLE TO LABEL THE BELOW INDICATED PRODUCT(S) AS SGCC® CERTIFIED. REPRESENTATIVE SAMPLES OF THE BELOW PRODUCTS HAVE BEEN FOUND TO BE IN COMPLIANCE WITH ANSI Z97.1-2015 AS INDICATED AND CPSC 16 CFR 1201 STANDARDS, KNOWN AS COMPOSITE CERTIFICATION (COMP), OR BOTH STANDARDS WITH CAN/CGSB 12.1-2022 KNOWN AS COMP+CAN.

Tempered Transparent Glass

SGCC#	IN	MM	Attributes	Type Code	Max Size	ANSI Class	Test Std
8142	1/4	6		TTG	U	A	COMP+CAN
8143	5/16	8		TTG	U	A	COMP+CAN
8144	3/8	10		TTG	U	A	COMP+CAN

THIS SGCC® PROGRAM CERTIFICATION IS CURRENT AND IN FULL EFFECT AS OF THIS ISSUE DATE. CERTIFICATION IN THE SGCC® PROGRAM IS SUBJECT TO SEMI-ANNUAL RENEWAL. PLEASE CHECK THE SGCC WEBSITE AT WWW.SGCC.ORG OR THIS OFFICE FOR MOST CURRENT INFORMATION.

Wednesday, July 29, 2026	L26	
DATE OF ISSUE	CERTIFICATION PERIOD	ADMINISTRATIVE MANAGER

Y-serise
Installation Instruction

Installation Dimensions:

55" - 60" W x 63" H
55" - 60" W x 76" H
49" - 54" W x 76" H
43" - 48" W x 76" H

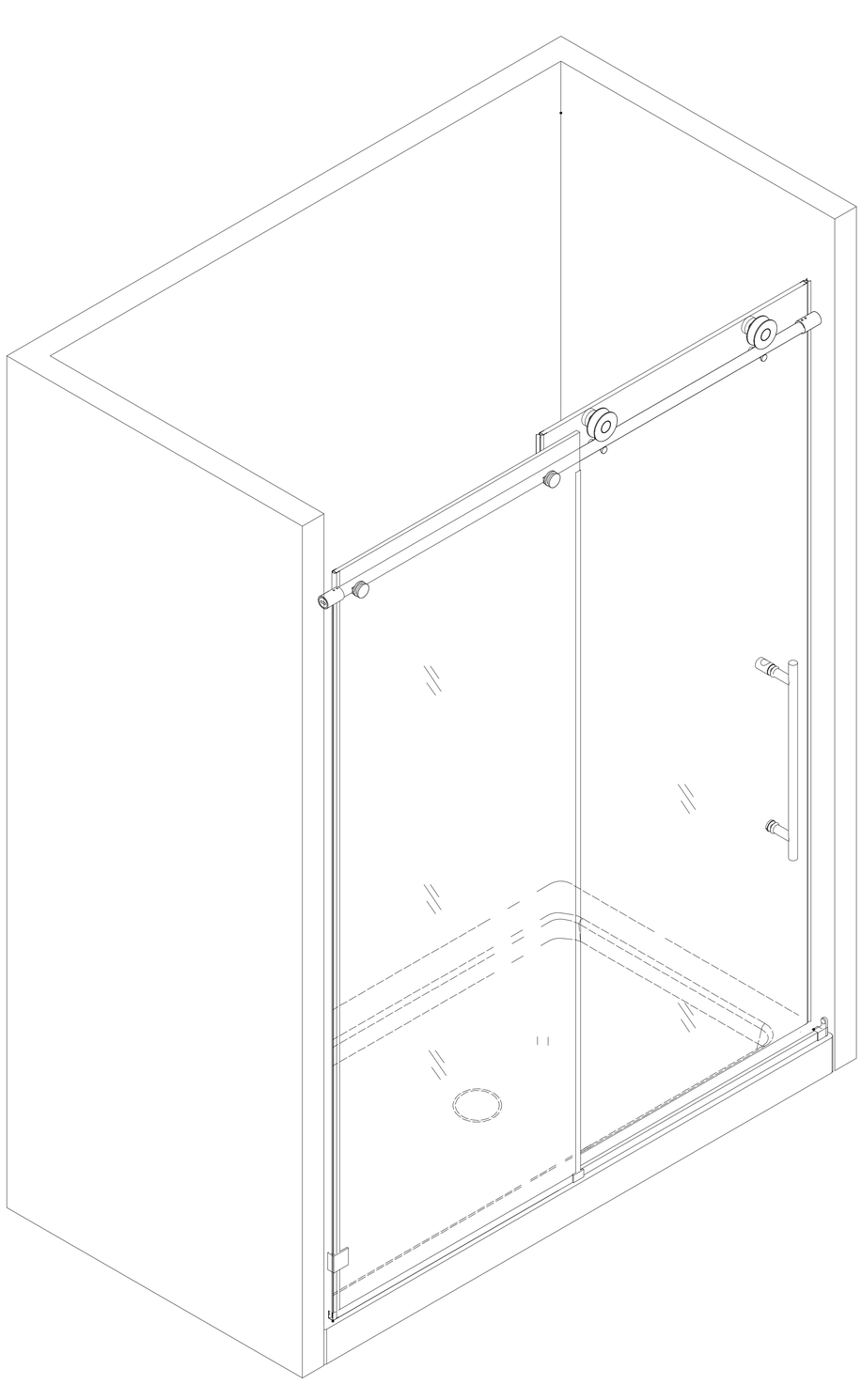

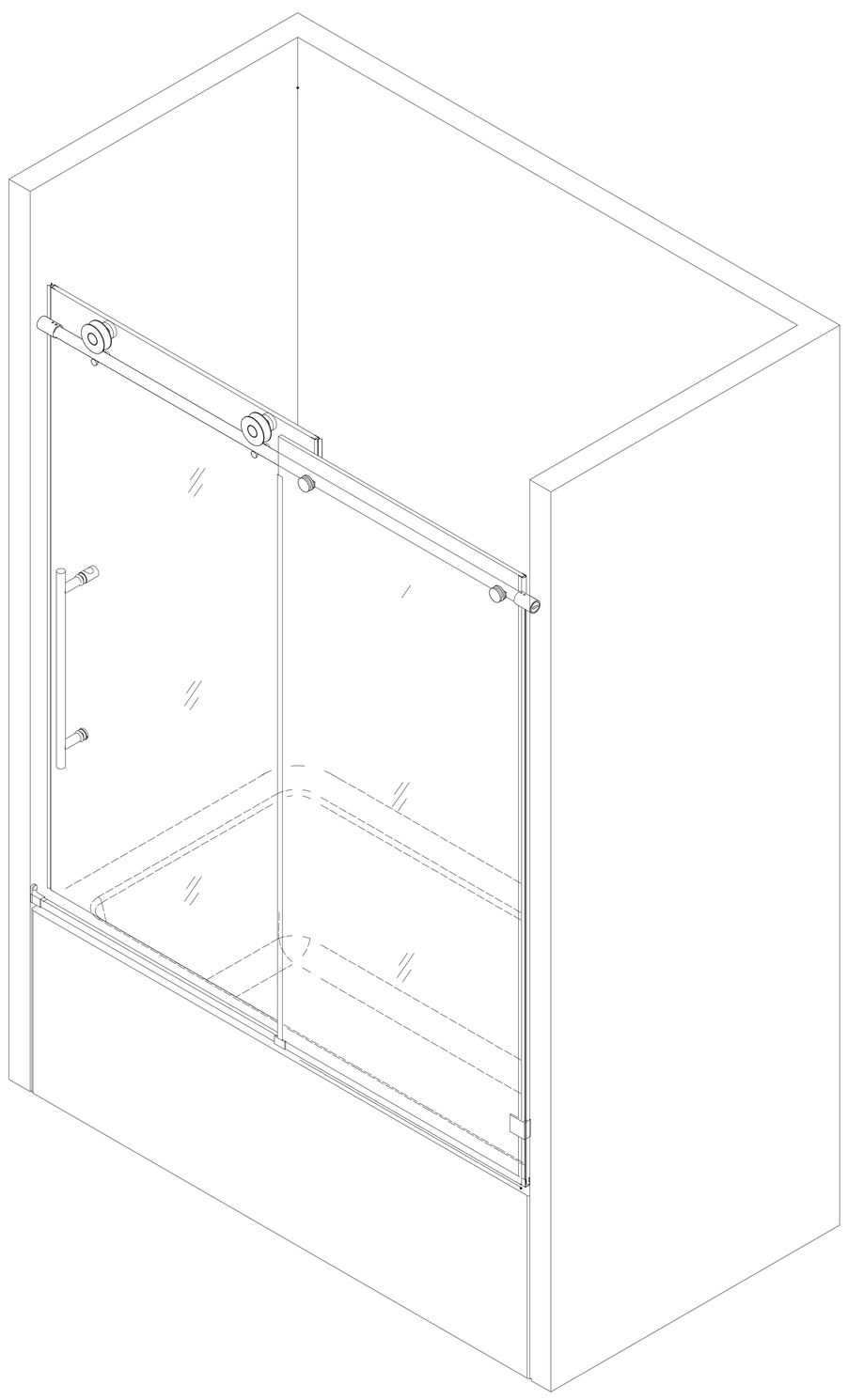

Please spend two minutes watching the installation video to save half an hour of installation time

installation video

Scan the QR code

Table of Contents

Section Title	Page #
Model Specific Preparation	1
Tools	2
Detailed Diagram of Shower Door Components	3
Parts List	4
Measure the finished opening width	5
Adjust the Soft Closing Mechanism	6
Cut The Upper Top Rail	7
Positioning wall hole	8
Install rail wall connector (3-A)	9
Left Hand Assembly Installation Steps	10-23
Right Hand Assembly Installation Steps	24-37
Replacing the buffer clamp step	38
Sealing	39

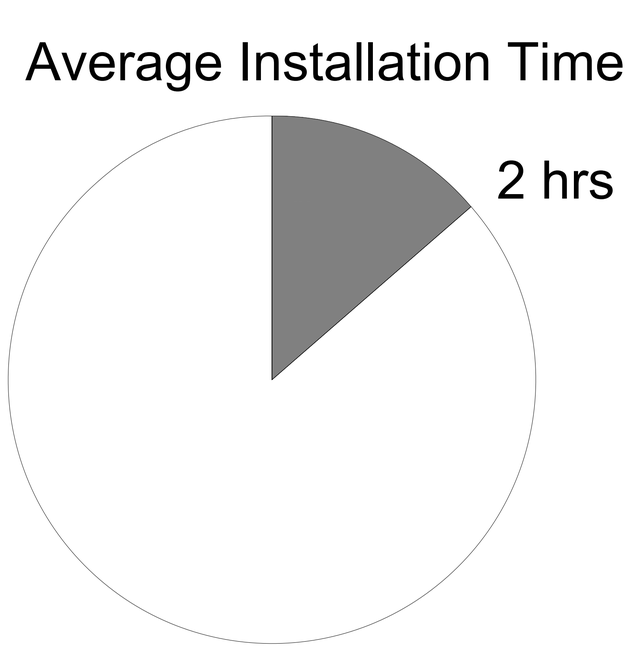

Model Specific Preparation

REQUIRED:

Verify threshold and walls with a level

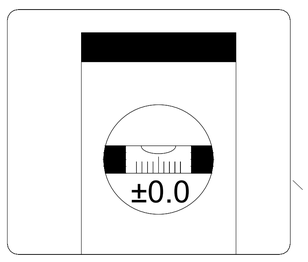

Threshold must be level

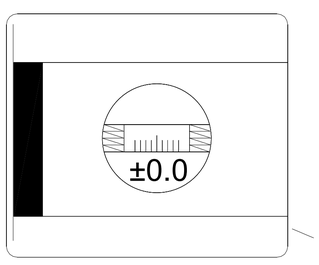

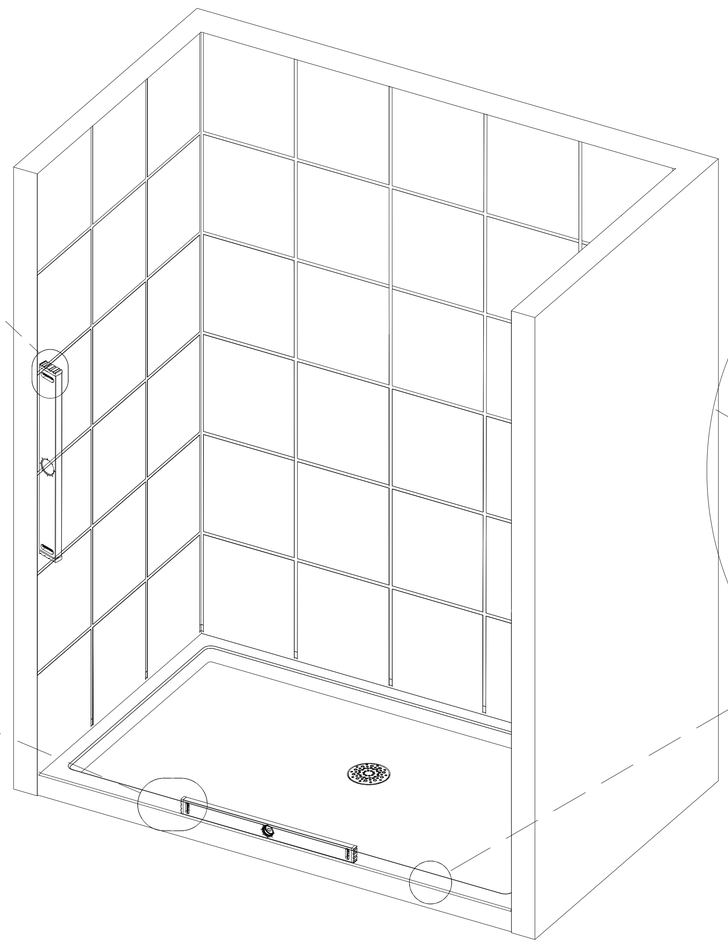

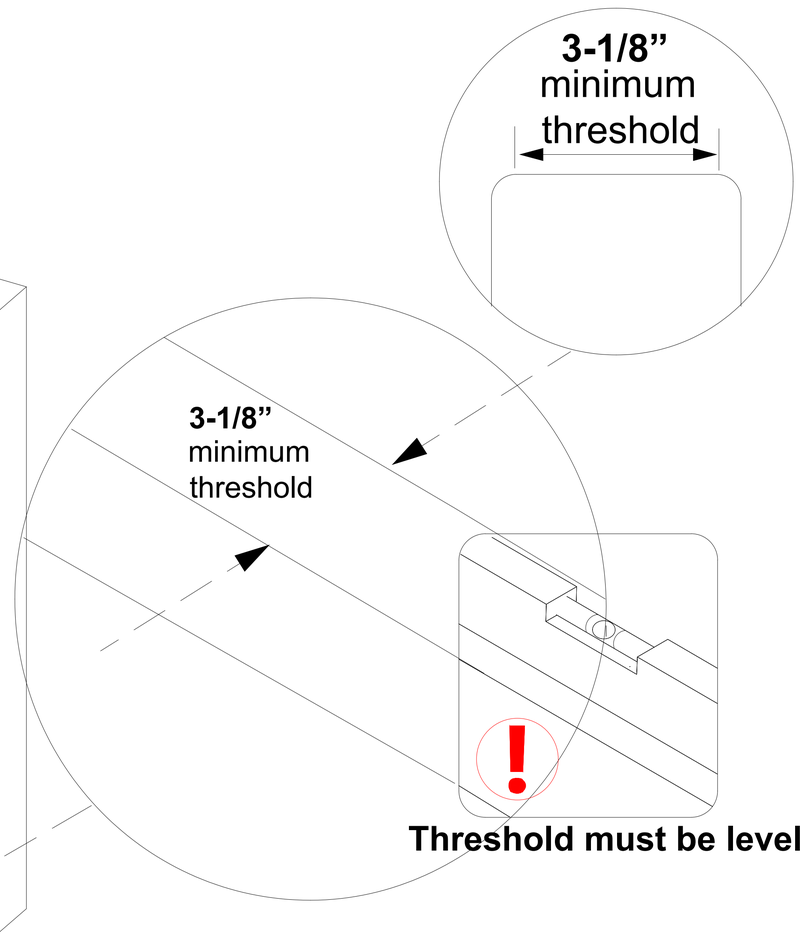

Threshold must be level

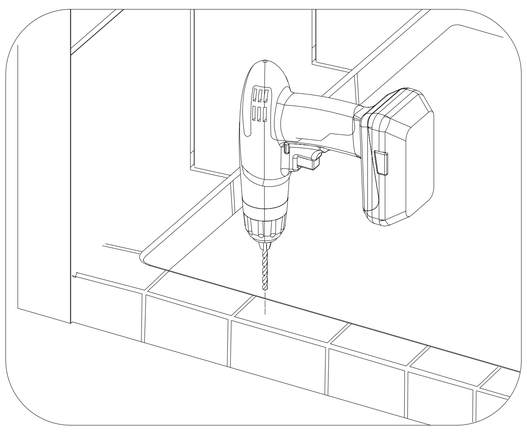

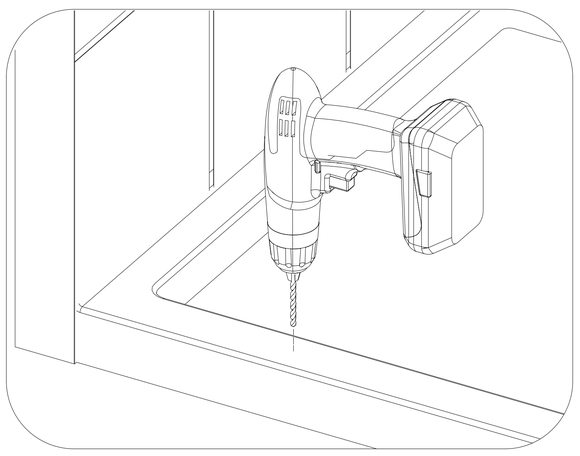

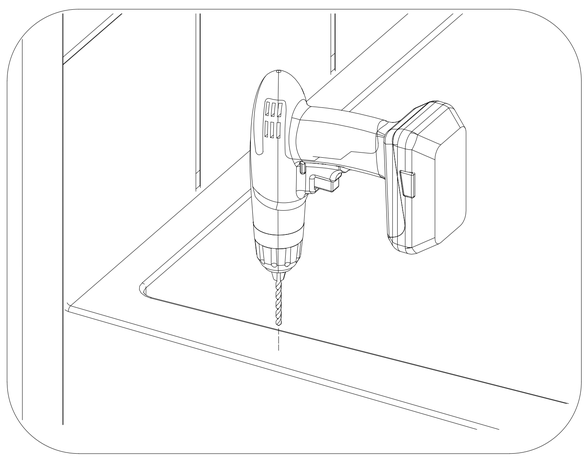

Thank you for purchasing this product. It can be installed by applying silicone sealant or drilling! Please check if the base or threshold can be drilled before installation!

Contact the manufacturer of the base, threshold material with any questions regarding the drilling of holes into their product.

Before installation, please check if there is enough space on the edge of the threshold to install the product. The minimum threshold requirement is 3-1/8” inch!

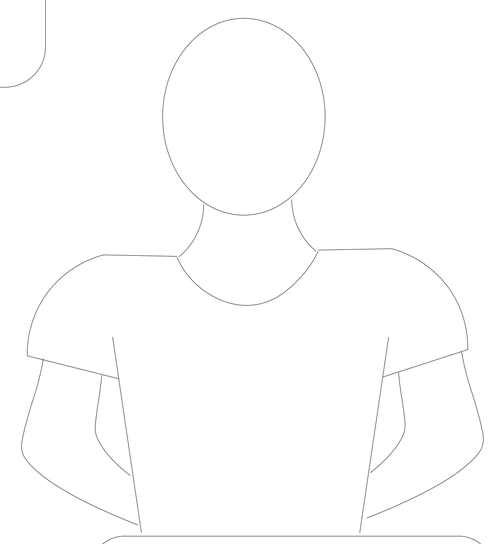

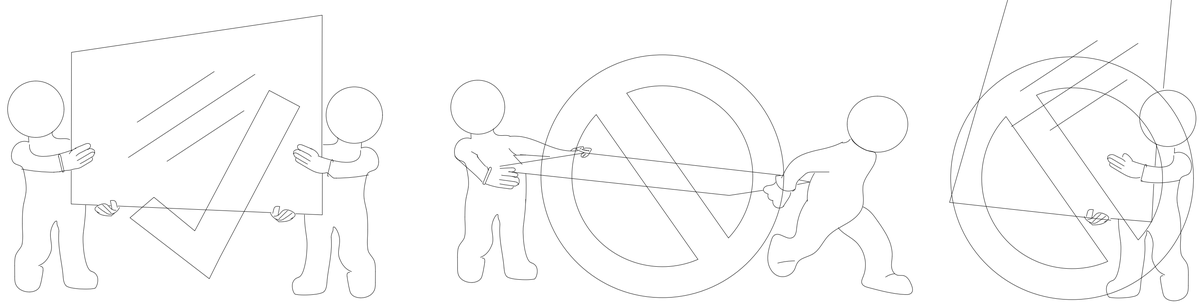

This door recommended professional installation. Two installers required.

Professional Installation recommended.

Tools

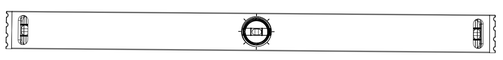

Level

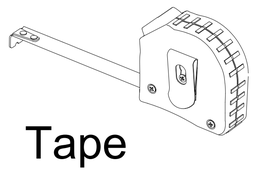

Tape Measure

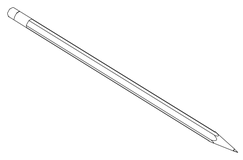

Pencil

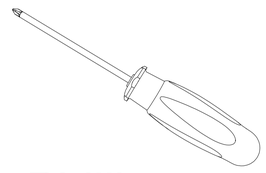

Phillips Screwdriver

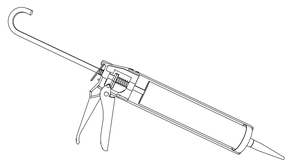

Silicone

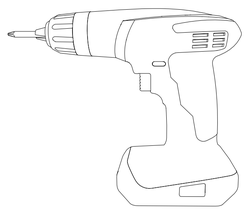

Power Drill

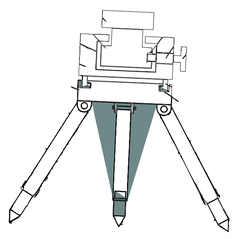

level gauge

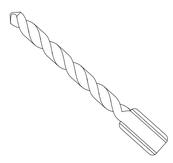

Drill Bit Ø1/4" (6mm)

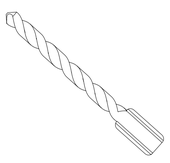

Drill Bit Ø5/16" (8mm)

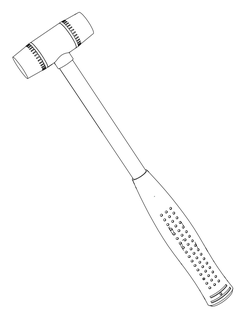

Soft Head Hammer

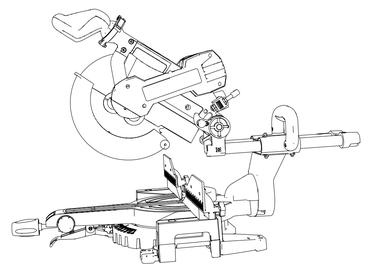

Mitre Saw

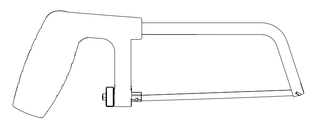

Hacksaw

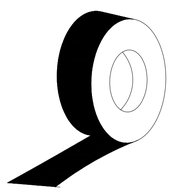

Painter’s Tape

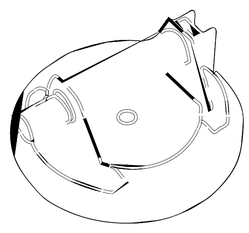

Professional-grade Glass suction cup

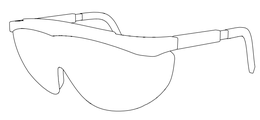

Safety Glasses



Work Gloves



Measure the finished opening before proceeding with the installation to be sure that the correct model size has been ordered.

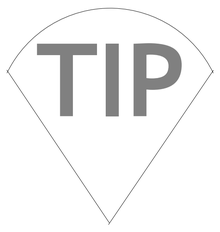

Prior to installation, cover the shower drain with tape to prevent losing screws or small parts.

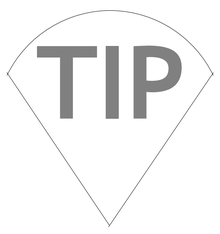

To prevent stripping the screw heads, set screw gun clutch to a low setting when installing screws and bolts.



Unpack your unit carefully and inspect it. Lay it out and identify all parts using the **Detailed Diagram** on **page 4** and parts list in this manual as a reference. Before discarding the carton, check for small hardware bags that may have fallen to the bottom of the box. If any parts are damaged or missing, please contact us for replacement, The shipping boxes may contain extra parts not used in your model configuration.



Retain these installation instructions for future reference.

Detailed Diagram

Spare parts

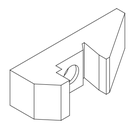

28

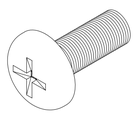

29

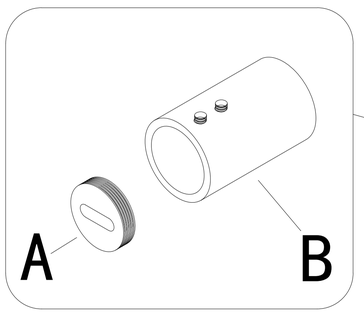

1
2
3
4
5
6
7
8
9
10
11
12
13
27
14
15
16
21
17
18
23
30
24
25
26
19
20
22

PART LIST

Check all parts according to the list before assembly

1 	2 	3 	4 	5 
Ø8 Wall Anchor (2pcs)	**ST5X40 Screw (2pcs)**	**Rail Wall Connector (2pcs)**	**Top Rail (1pc)**	**Soft Closing Mechanism (2pcs)**
6 	7 	8 	9 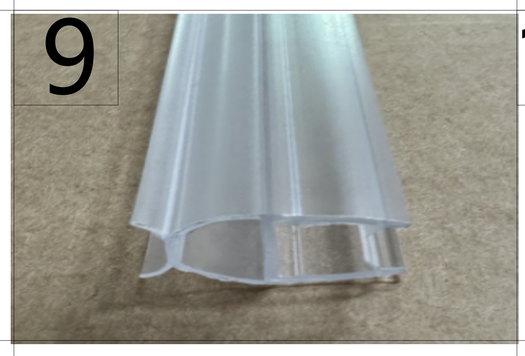	10
Roller Assembly (2pcs)	**Flip-Flop (2pcs)**	**Anti-Jumper (2pcs)**	**Bumper Strip (2pcs)**	**Sliding Panel (1pc)**
11 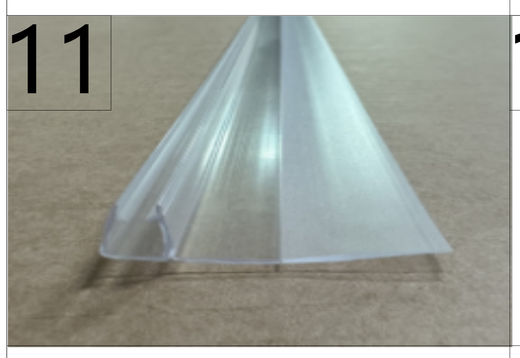	12 	13 	14 	15 
F-form waterproof strip (1pc)	**Handle (1pc)**	**Decoration Cover of Bottom Wall Connecting Part (1pc)**	**Bottom Rail Wall Connecting Part(1 pc)**	**Base Bar (1pc)**
16 	17 	18	19 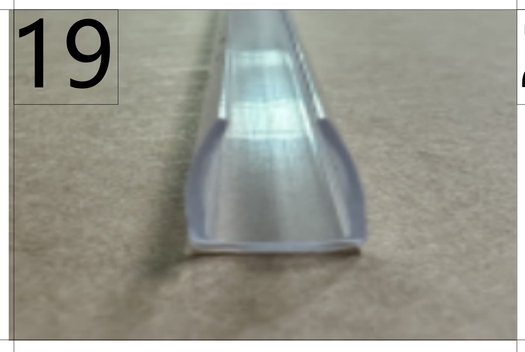	20 
Sliding Block (1pc)	**Pull Rod Fixing Part (2pcs)**	**Fixed Panel (1pc)**	**U-form waterproof strip (1pc)**	**Allen key (5pcs)**
21 	22 	23 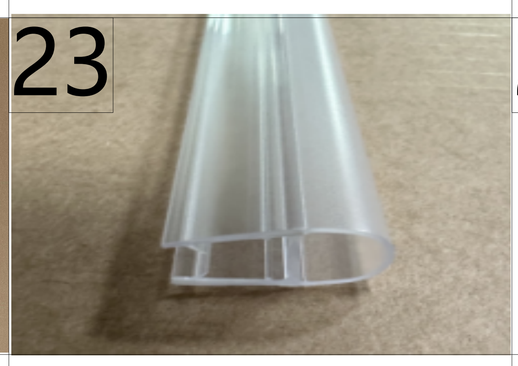	24 	25 
ST4X35 Screw (1pc)	**Template (1pc)**	**Waterproof strip (1pc)**	**Wall connecting clip (1pc)**	**ST4X40 Screw (1pc)**
26 	27 	28 	29 	30 
Ø6 Wall Anchor(4pcs)	**ST4X35 Screw (1pc)**	**buffer clamp (2pcs)**	**M3X7 Screws (2pcs)**	**24 Hole Plugs (1pc)**

* Utilize Safety Glasses and Safety Gloves when constructing this shower door
* We recommend that 2 people work together to complete this installation

STEP 1

Measure the finished opening width.

NOTE

IMPORTANT: Incorrect measurement may prevent proper door closure. Double-check measurement.

Before beginning installation, verify the door assembly will fit within the horizontal opening of the shower enclosure.

Measure distance “W1” of upper shower enclosure opening and distance “W2” of lower shower enclosure opening.

Both measurements should be within the dimensions listed above for required opening widths.

W1 = Upper Enclosure Width
W2 = Lower Enclosure Width

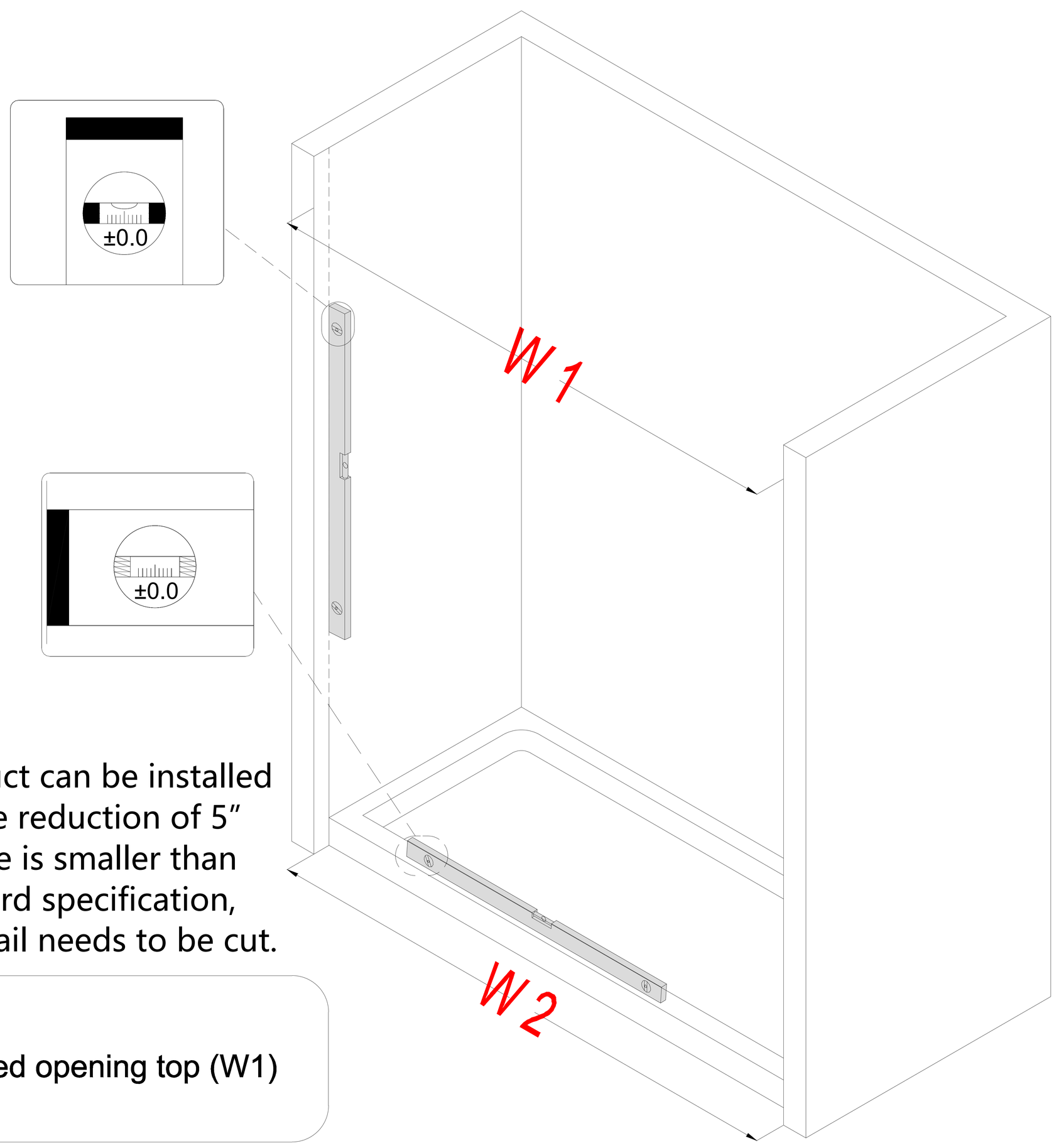

This product can be installed with a size reduction of 5”
If "W1" size is smaller than the standard specification, The Top Rail needs to be cut.

_____ Finished opening top (W1)

STEP 2

Adjust the Soft Closing Mechanism 5

The soft closing mechanism 5 is already installed into the top rail 4 .After determining the actual required installation width on page 5, the soft closing mechanism 5 also needs to be adjusted in position to facilitate subsequent installation!

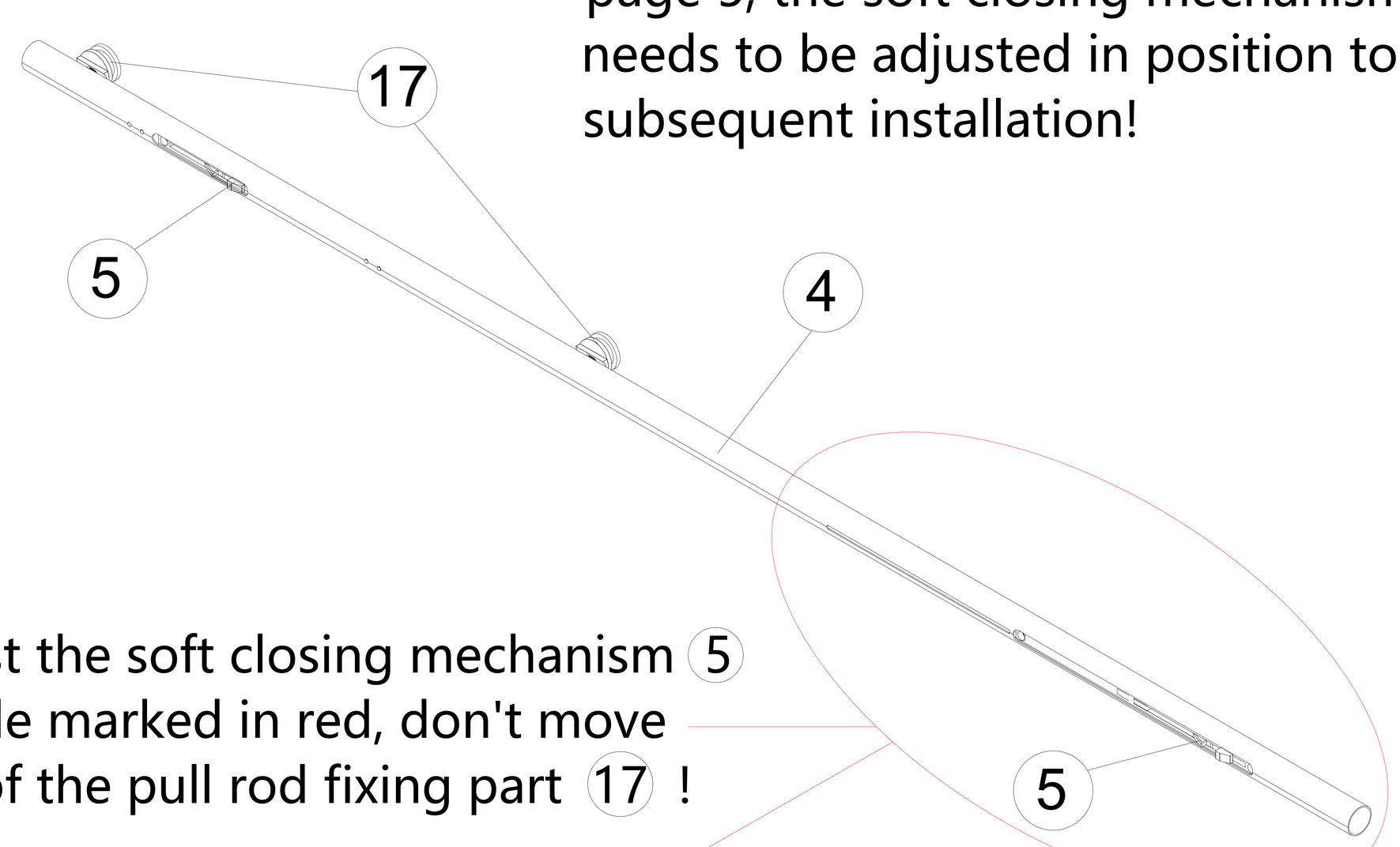

Just adjust the soft closing mechanism 5 on the side marked in red, don't move the side of the pull rod fixing part 17 !

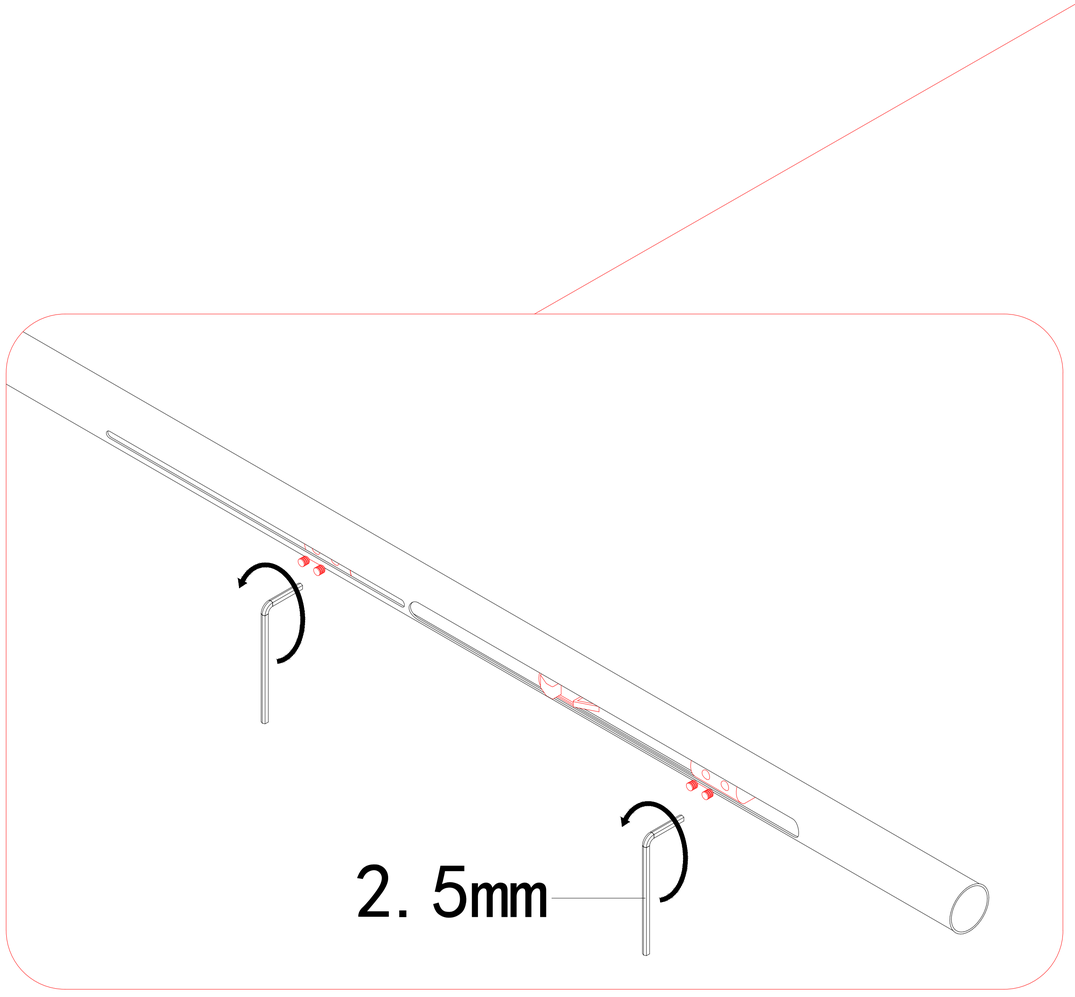

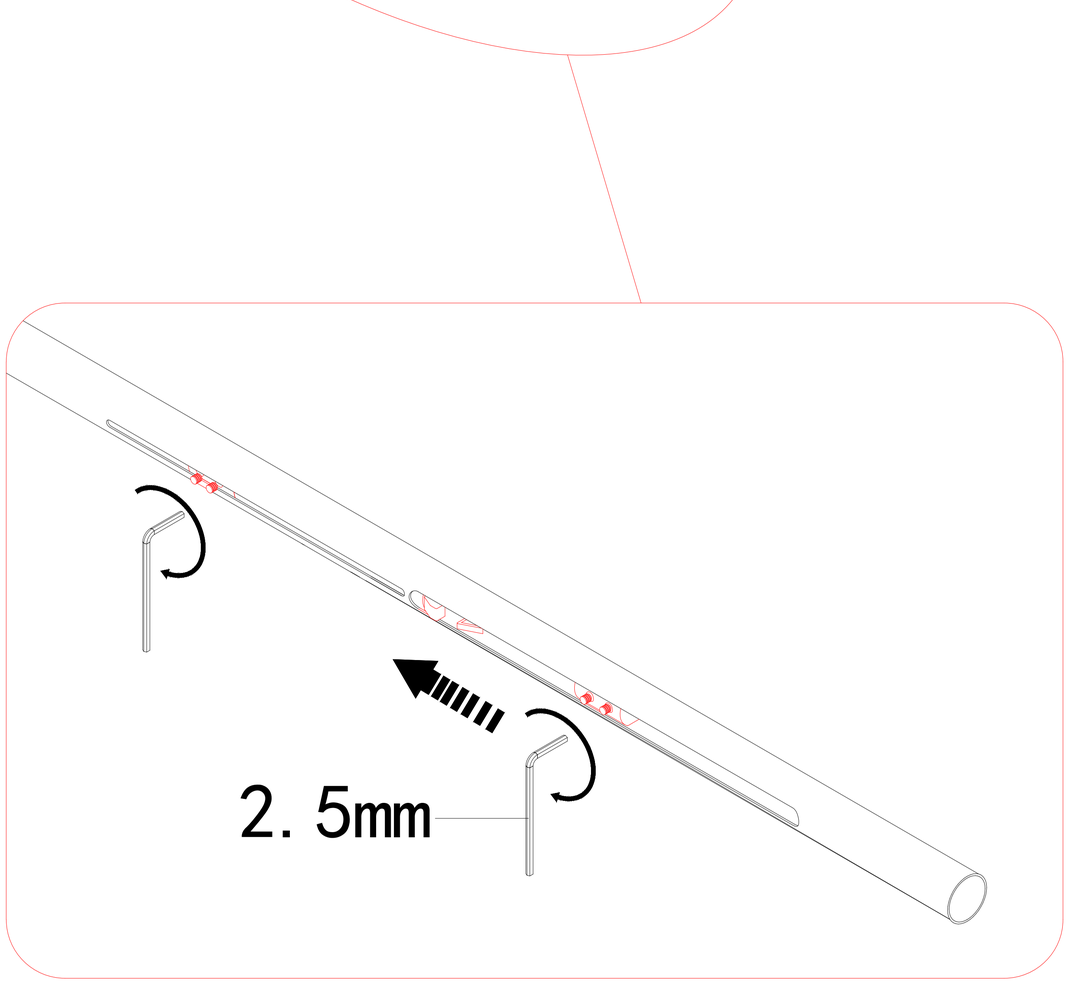

1. Use allen key to to loosen the screws soft closing mechanism 5

2. For example, If you want to shorten the top rail 4 by 1 inch, the soft closing mechanism 5 needs to be moved inward by 1 inch according to the diagram, and then the fixing screws need to be tightened

STEP 3

Cut The Upper Top Rail 4

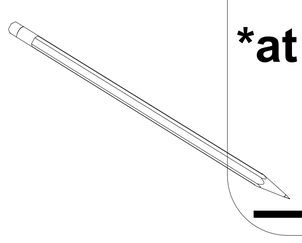

W1
***at model height**

”

(-) 1” =

(L)
***finished cut length**

”

Cut The Upper Top Rail 4 To: “**(L)**”

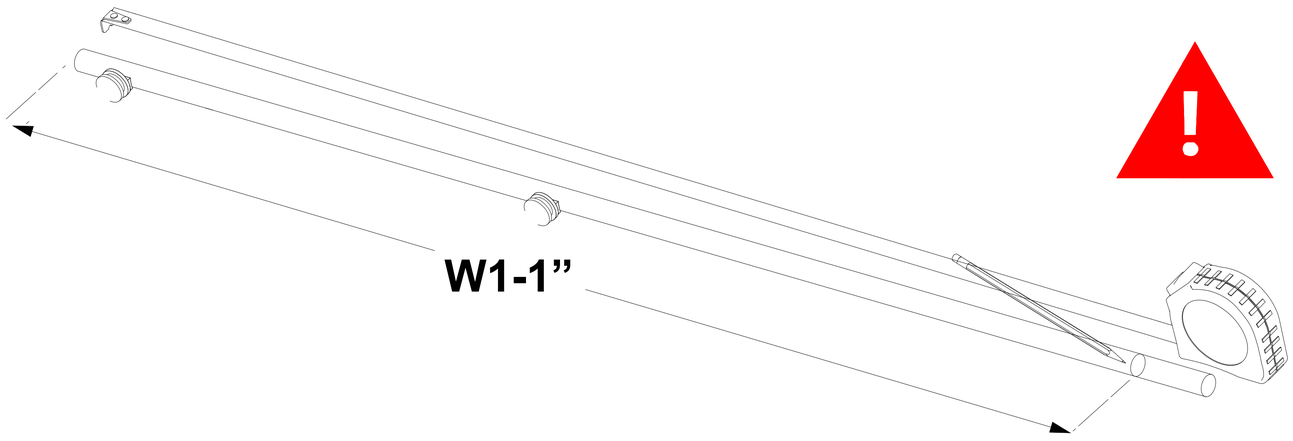

If W1 is smaller than the product specification, the Top Rail 4 needs to be cut to the appropriatesize,
Up to 5 inch can be cut，It cannot be cut from the side of the pull rod fixing part 17

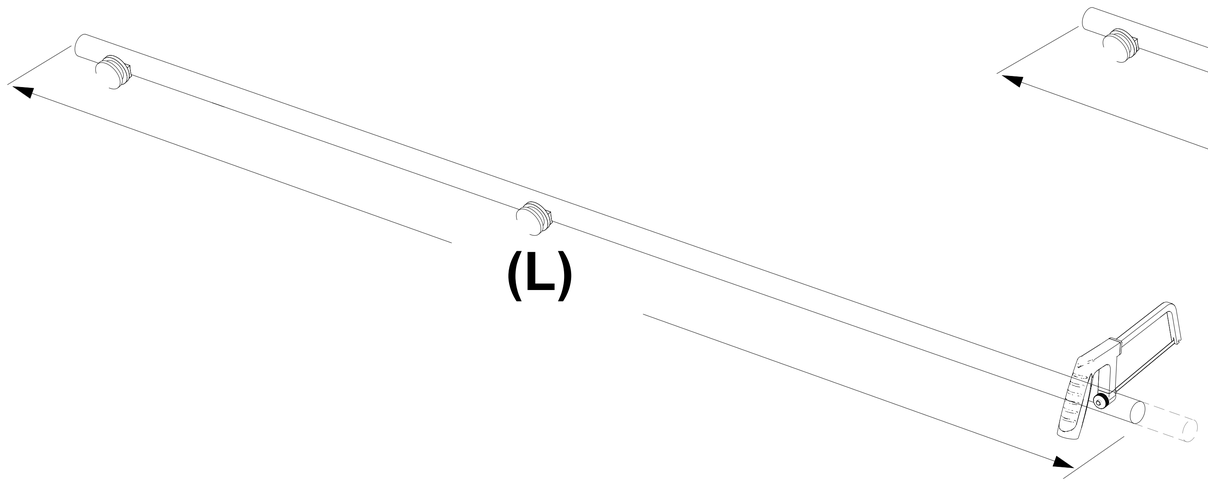

OR

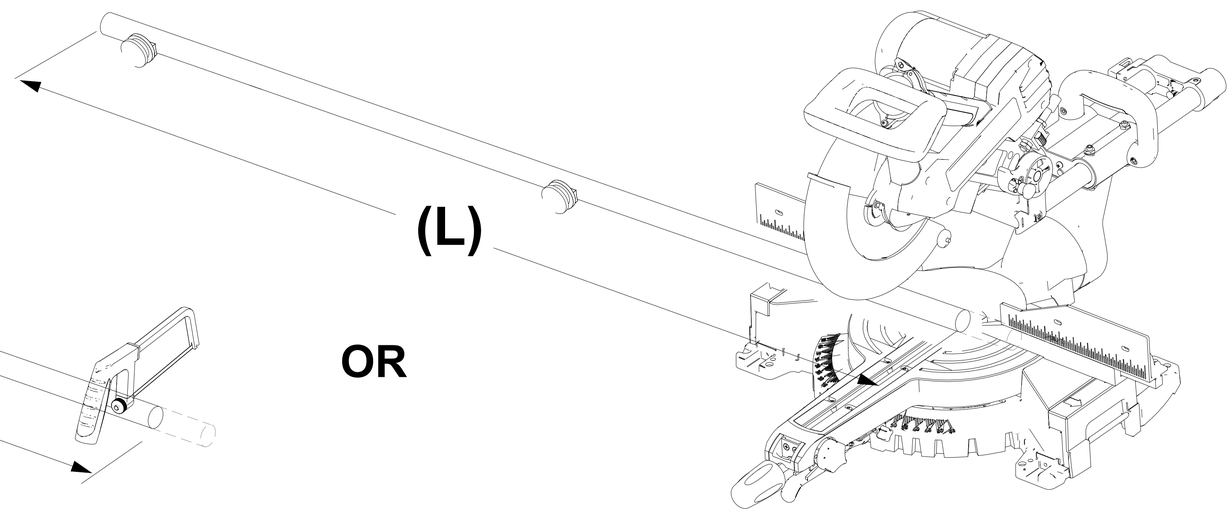

TIP

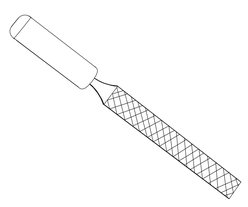

Use a metal file to deburr the cut end

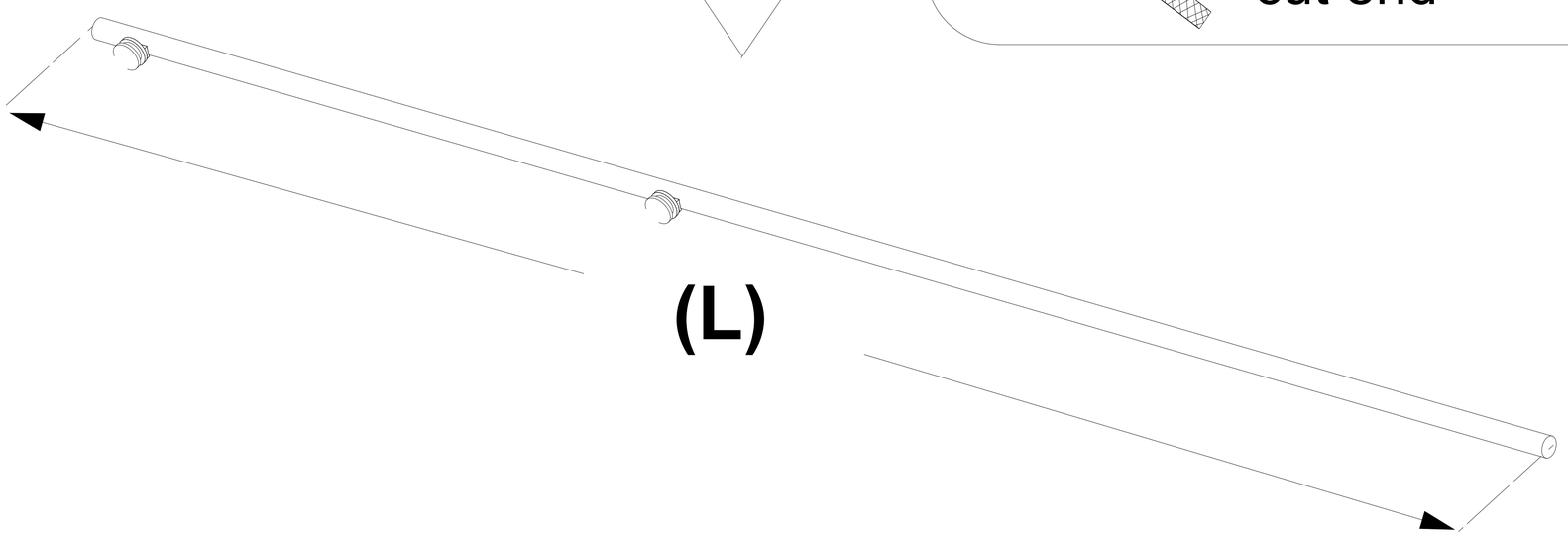

NOTE

The **Top Rail** 4 it **cannot be** cut from the side of the **pull rod fixing part** 17

STEP 4

Locate the installation position of the rail wall connector 3

Pay attention to the orientation of the template

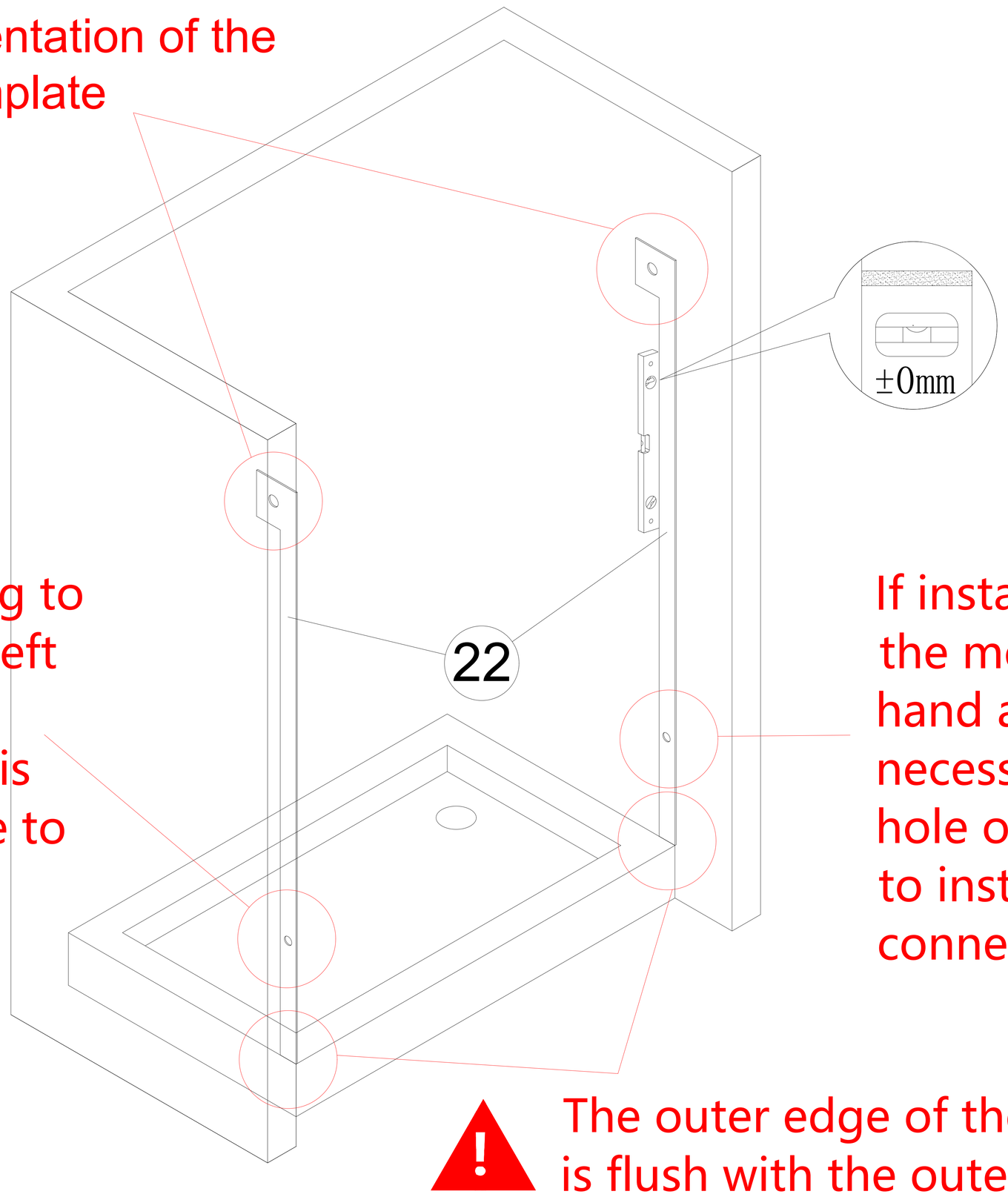

If installed according to the method of the left hand assembly, it is necessary to drill this hole on the left side to install the Wall connecting clip 24

If installed according to the method of the right hand assembly, it is necessary to drill this hole on the right side to install the Wall connecting clip 24

The outer edge of the Template is flush with the outer edge of the stone foundation



1.Lean the template on the wall.



2.Make sure to level the template.

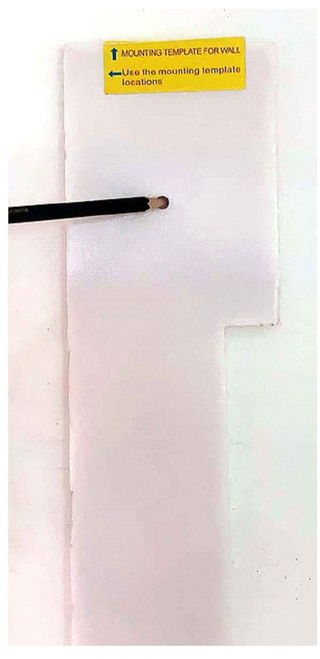

3.Use pencil to mark the hole



4.Drill a hole at the mark location.

STEP 5

Install rail wall connector (3-A)

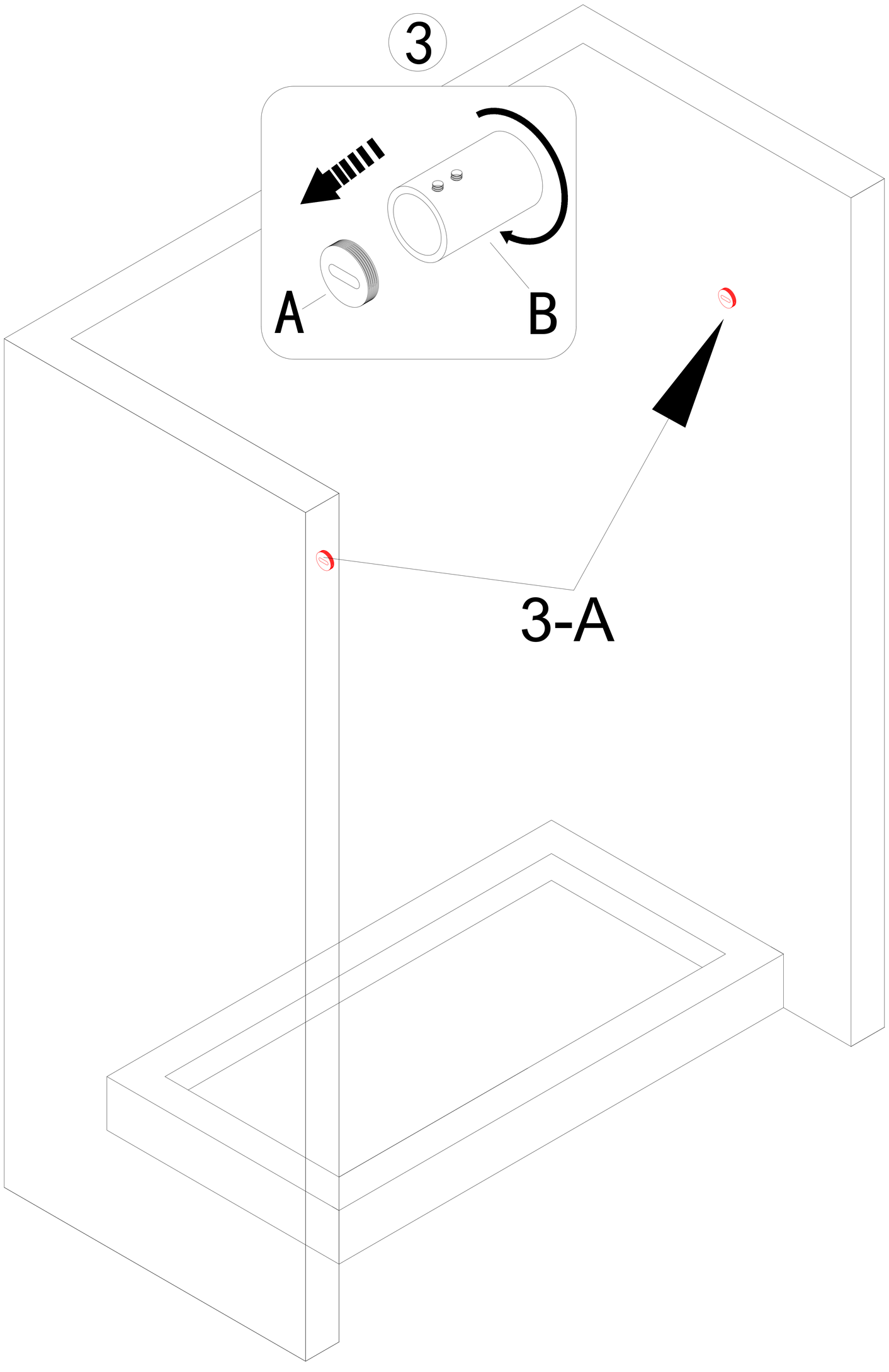

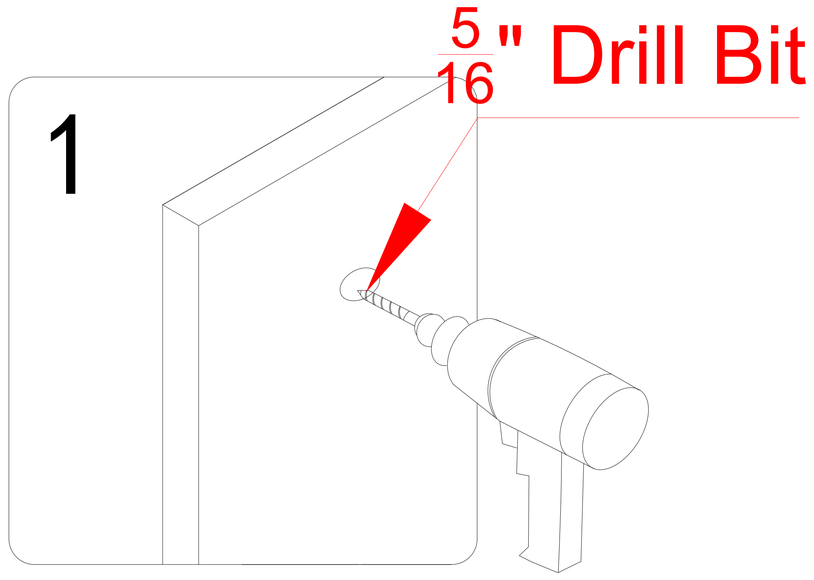

1. Drill a hole on the wall.

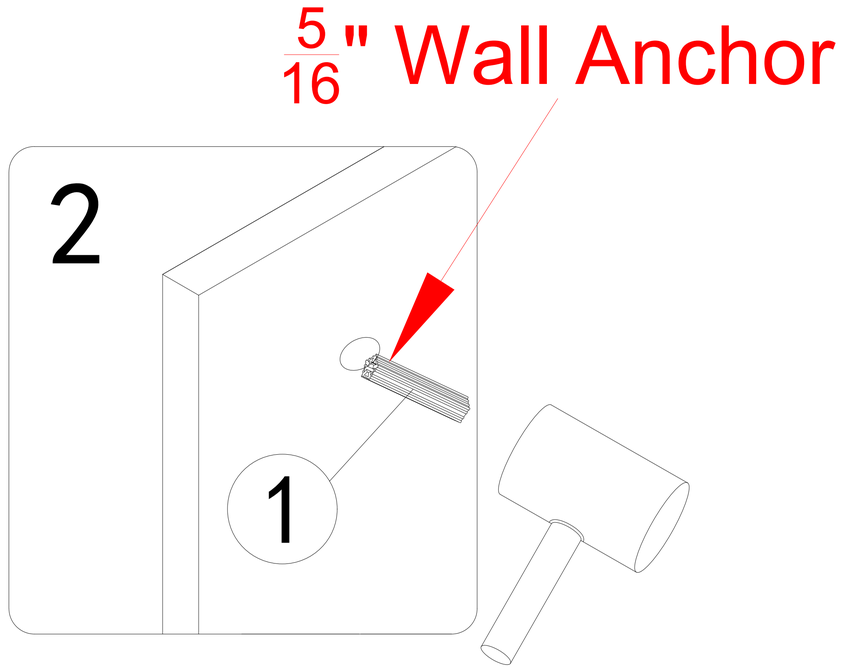

2. Hammer the Ø8 Wall Anchor (1) into the hole.

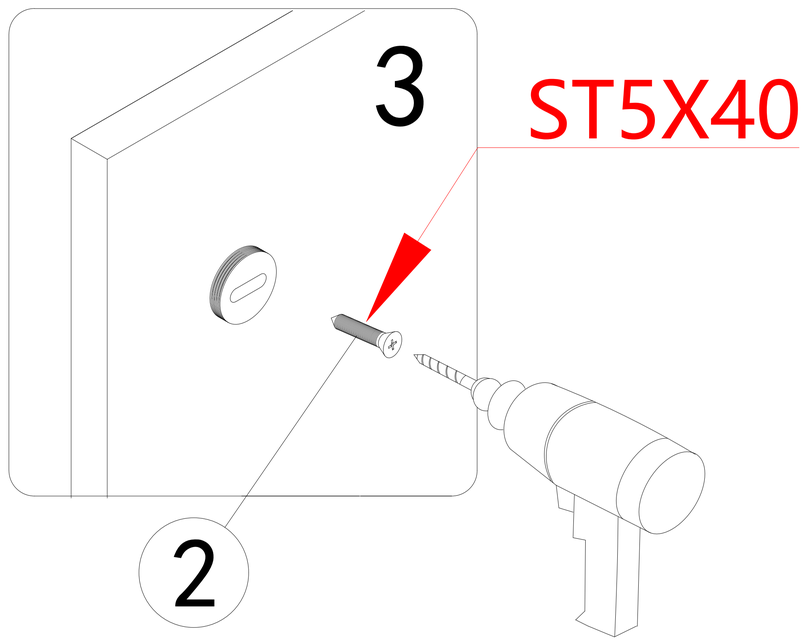

3. Secure Wall Connector (3-A) onto the wall.

STEP 6-1

(Left Hand Assembly)

Preparation work before installing the Fixed Panel 18

1. Use the Allen key to loosen the outer shell and remove it.

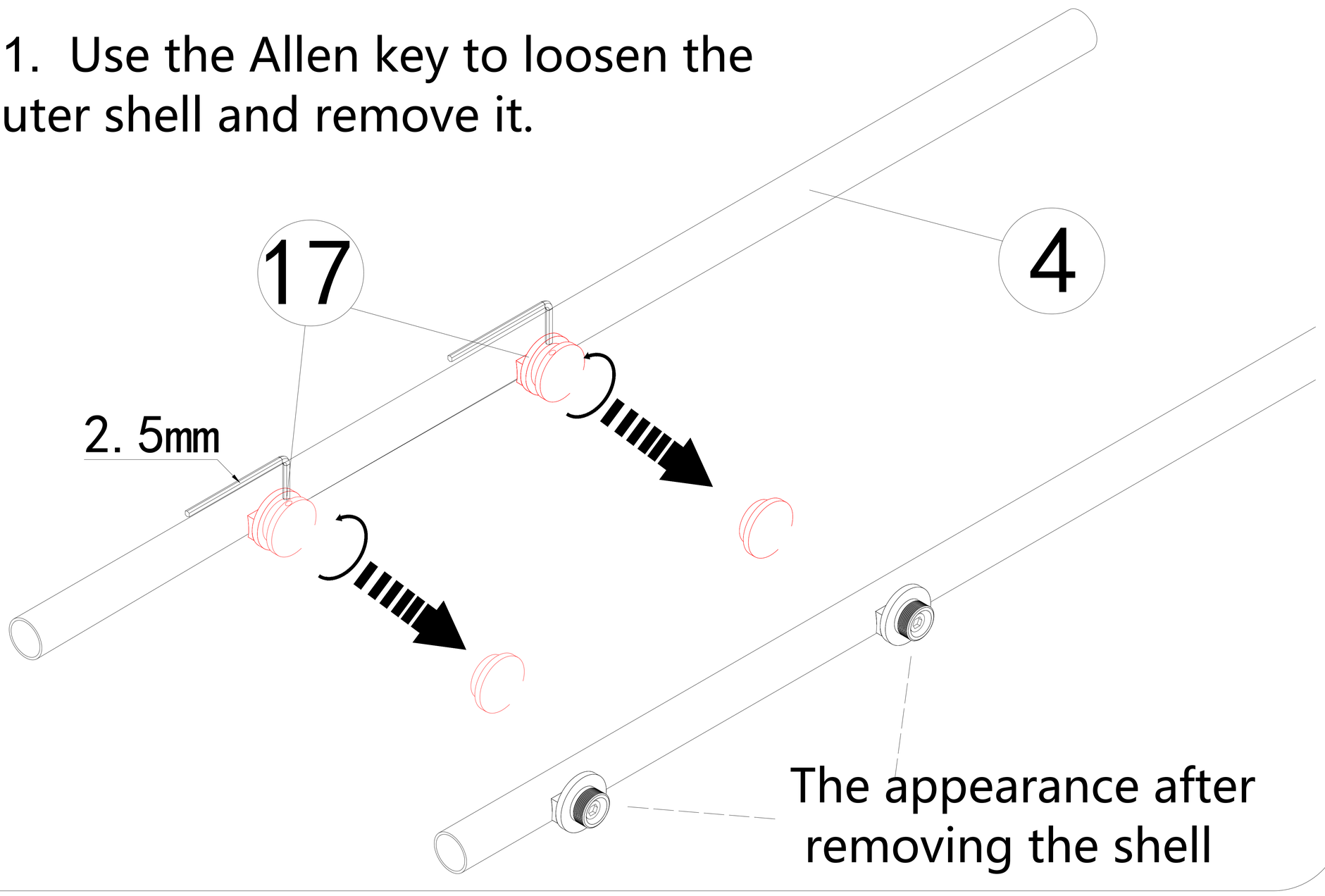

STEP 6-2

(Left Hand Assembly)

Preparation work before installing the Top Rail 4

1. Insert the Rail Wall Connector (3-B) into the two sides of pull rod.
2. Utilize the 2.5mm Allen key to tighten the screw inside.

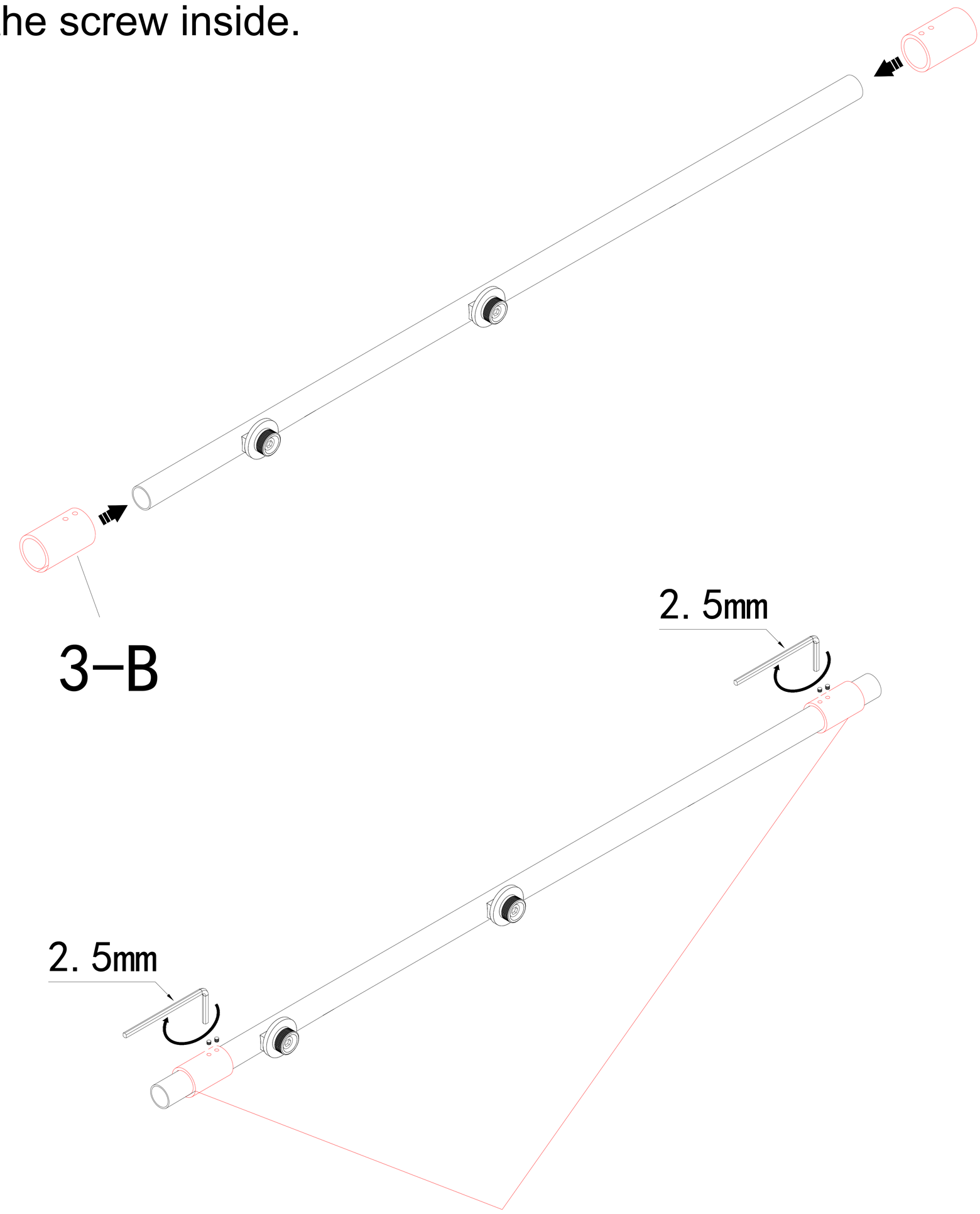

(Don't tighten it too tightly, as long as the part can't move)

STEP 6-3

(Left Hand Assembly)

Install the roller assembly 6 on the sliding panel 10

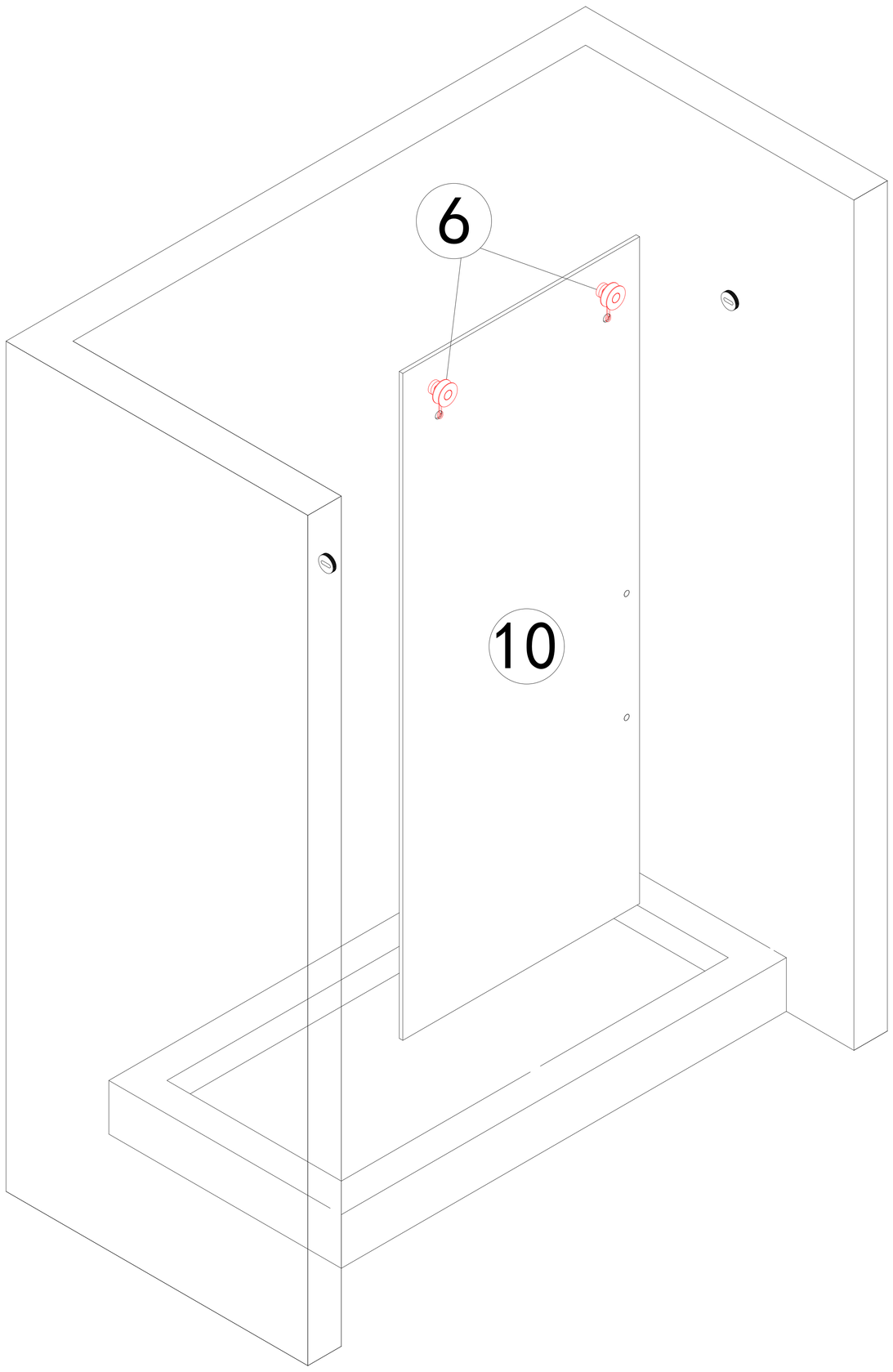

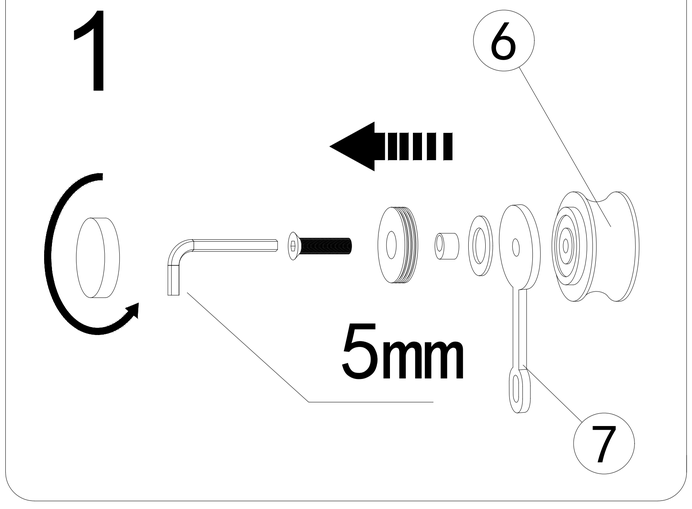

1. Disassemble the roller assembly 6 as shown, unscrew the cover and loosen the big bolt.

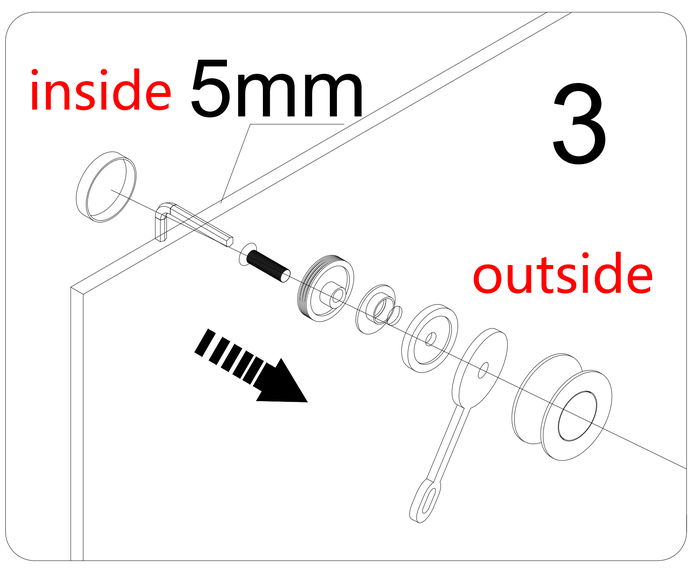

2. Reassemble the two roller assembly 6 onto the sliding panel 10 as shown in the picture. When finished, move the sliding panel 10 to the shower area.

Move the active panel to the shower area.
Lay the glass on a soft padded surface!



Note:The active glass is double-sided nano , can be freely installed.

STEP 6-4

(Left Hand Assembly)

Install the top rail ④ on the rail wall connector ③

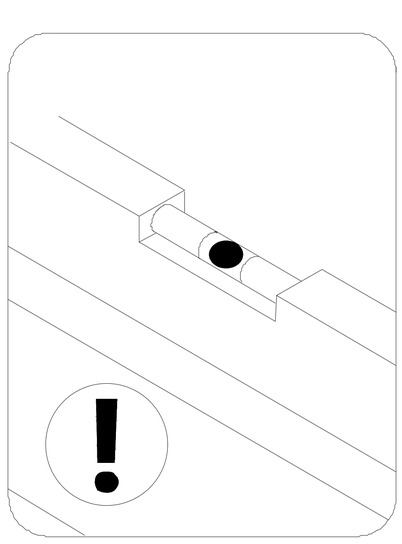

Threshold must be level

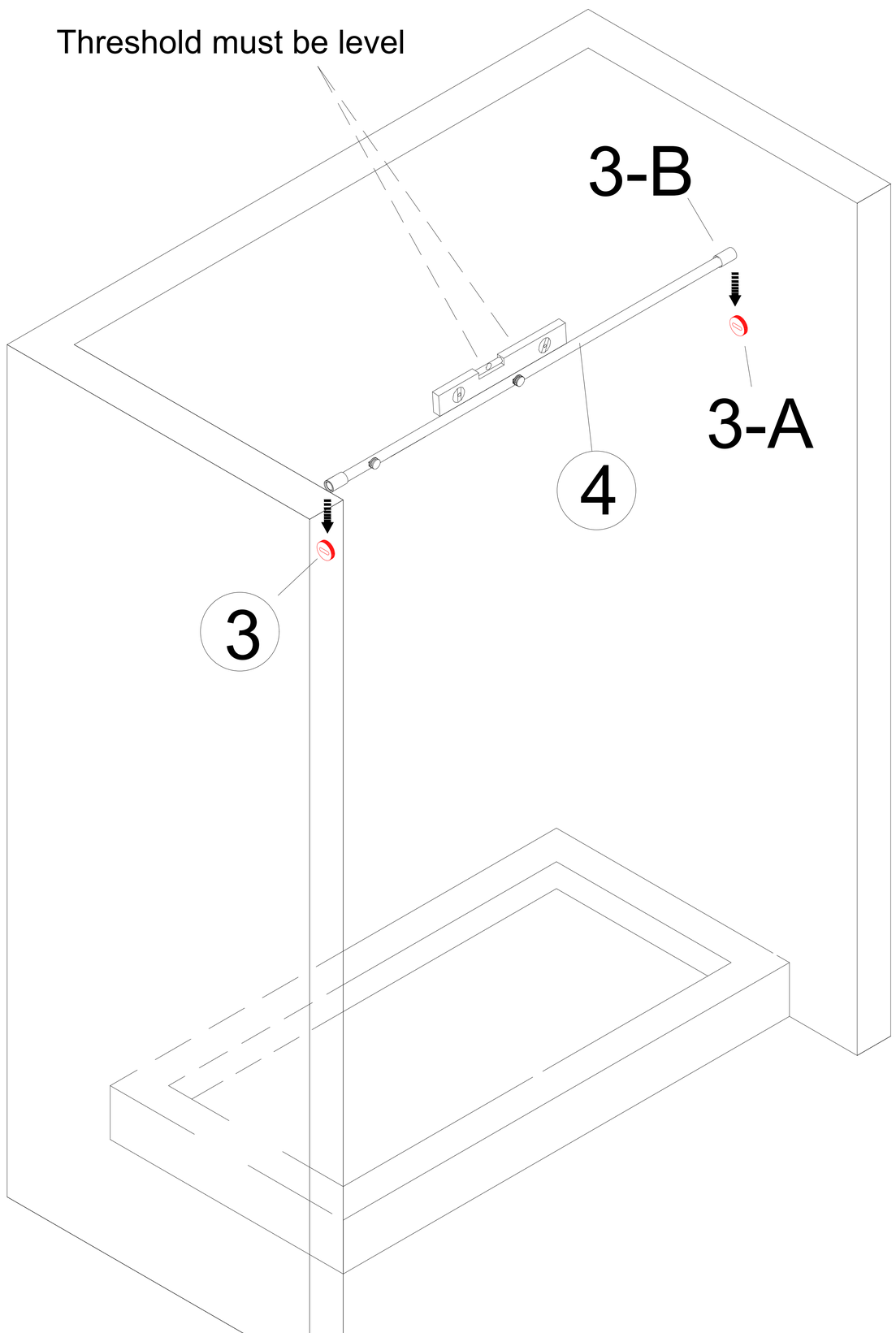

1.Screwing the rod and Wall Connector (3-B)in the Wall Connector(3-A).
2.Tightening by 2.5mm Allen Wrench.

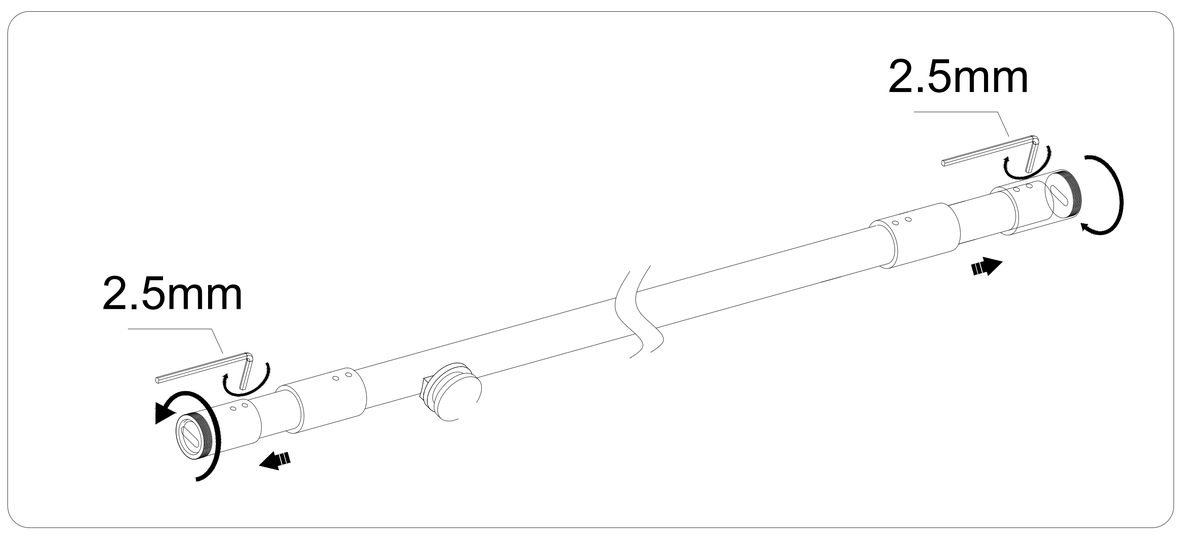

STEP 6-5

(Left Hand Assembly)

Install the Waterproof strip (23) and U-form waterproof strip (19) on the Fixed Panel (18)

After installation, please place the glass on a soft ground!

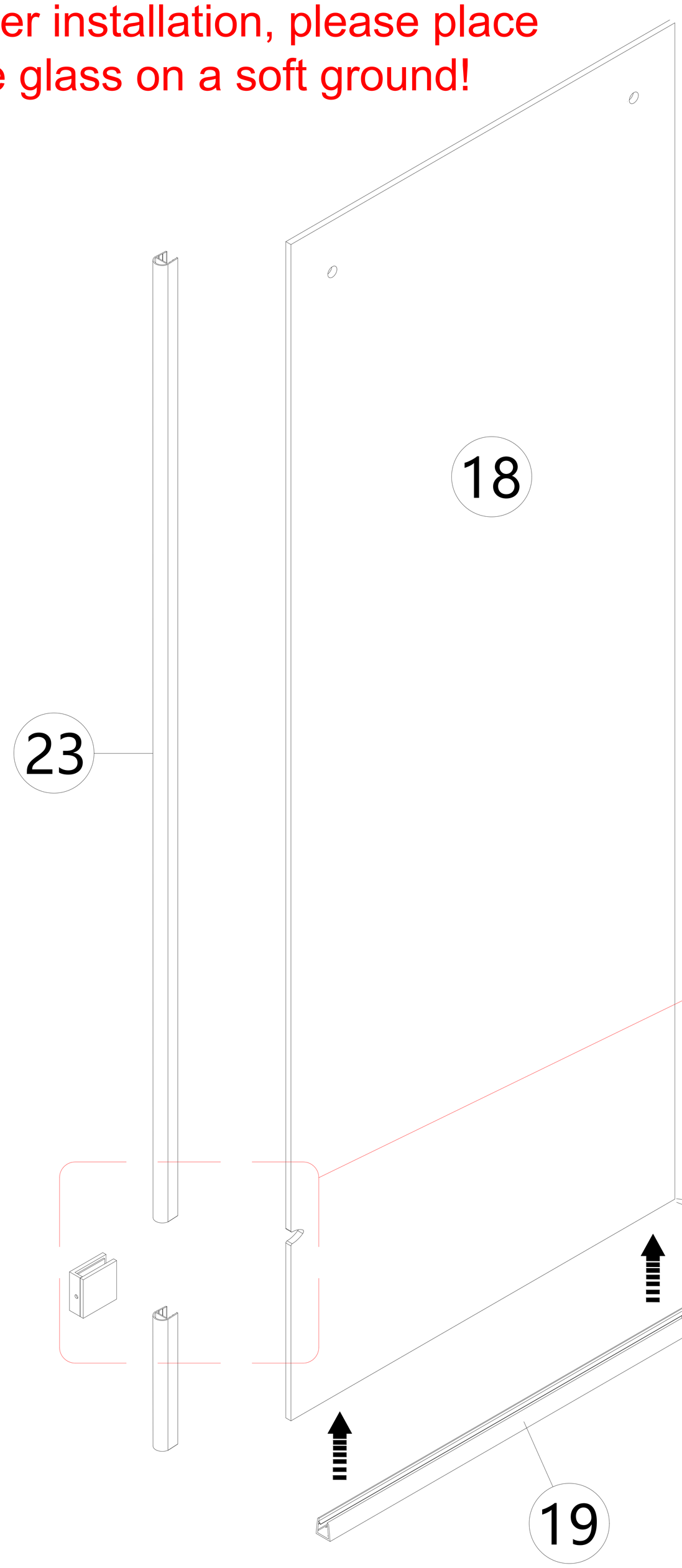

Note:the Waterproof strip (23) needs to be cut according to the position of the Wall connecting clip (24) otherwise it will affect the installation!

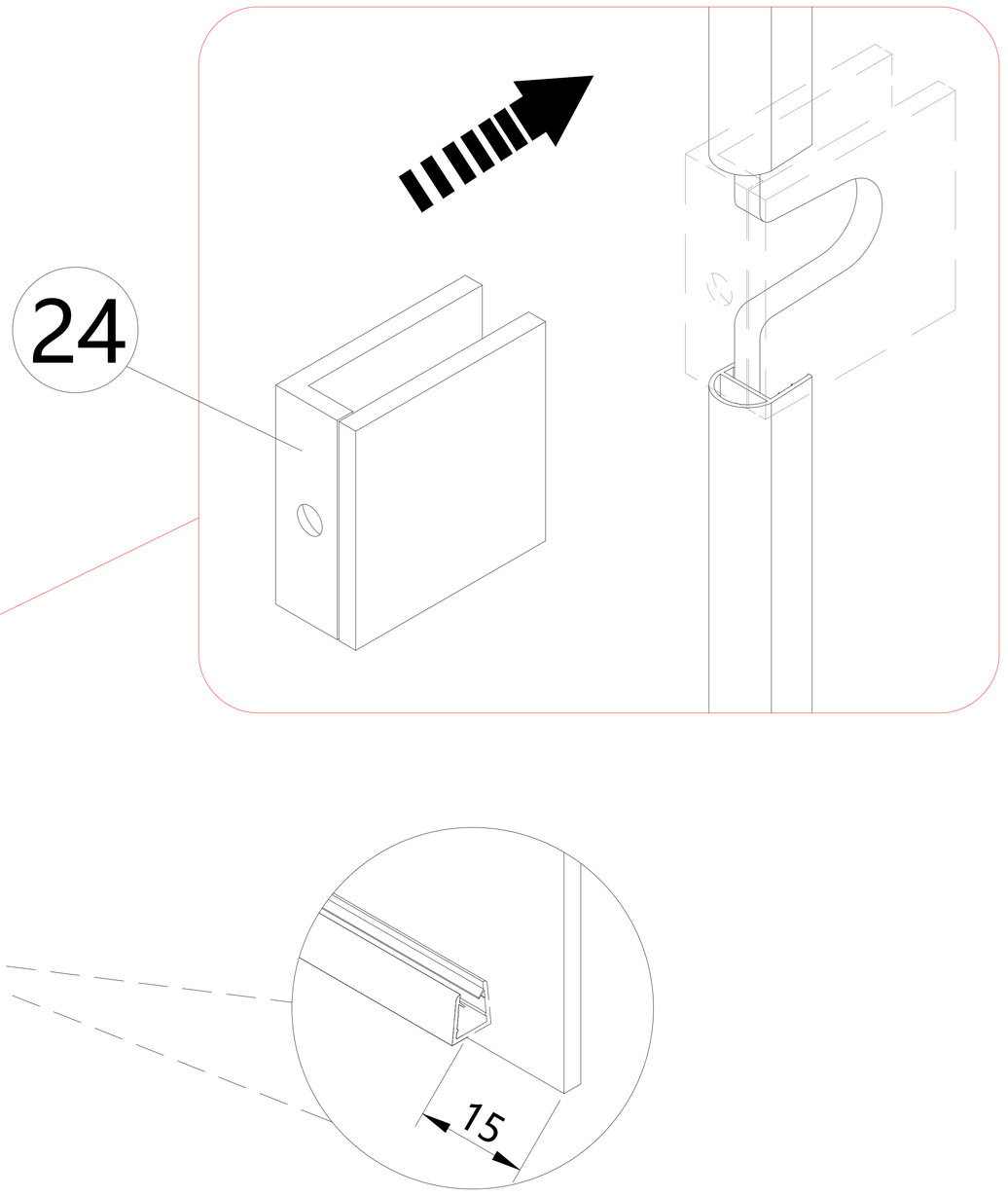

The waterproot strip is 15mm away from outside of the galss.

STEP 6-6

(Left Hand Assembly)

Preparation work before installing the Wall connecting clip 24

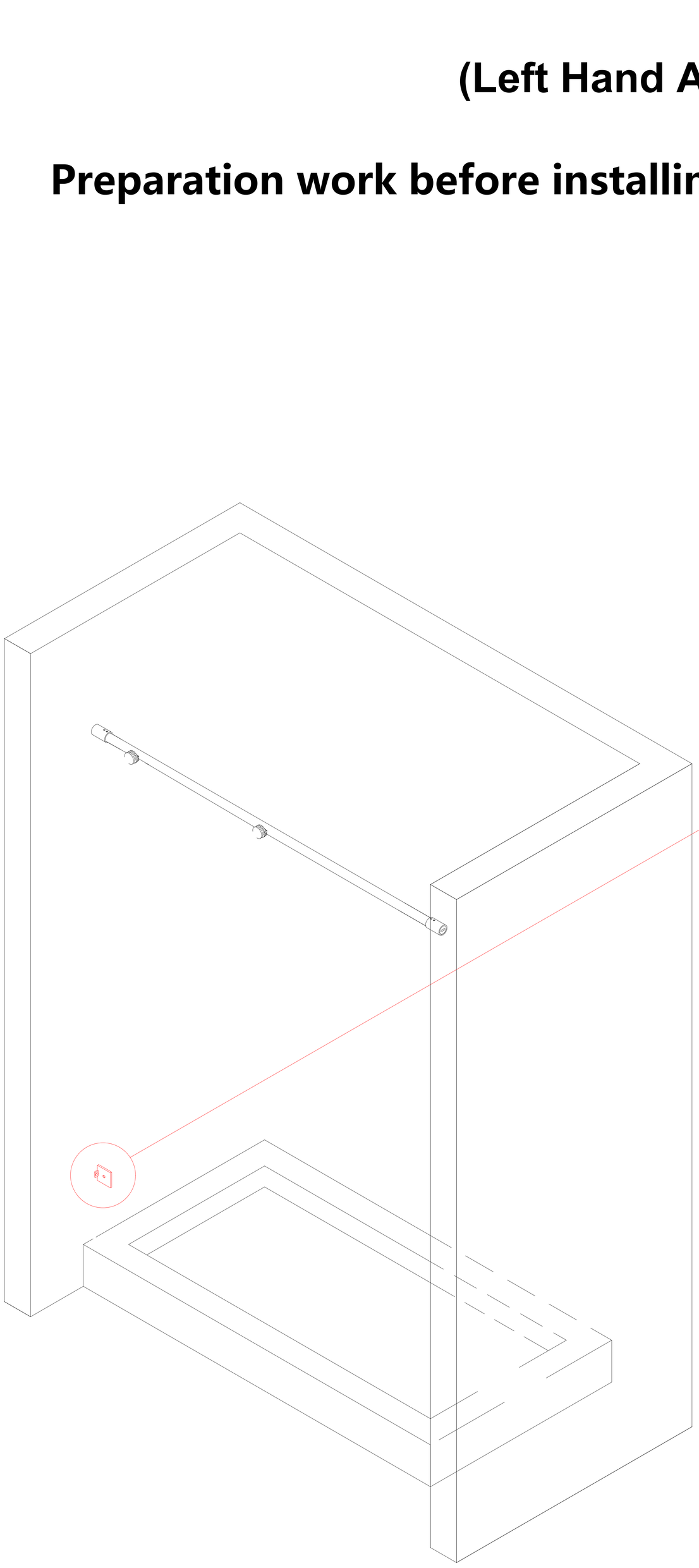

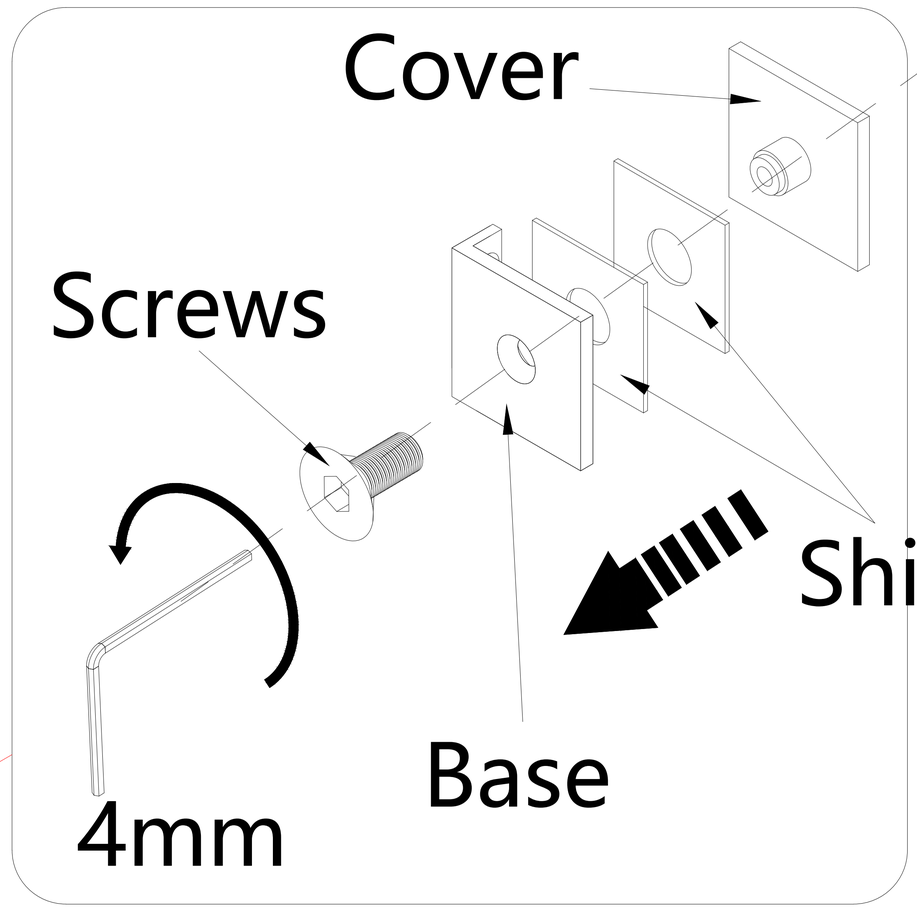

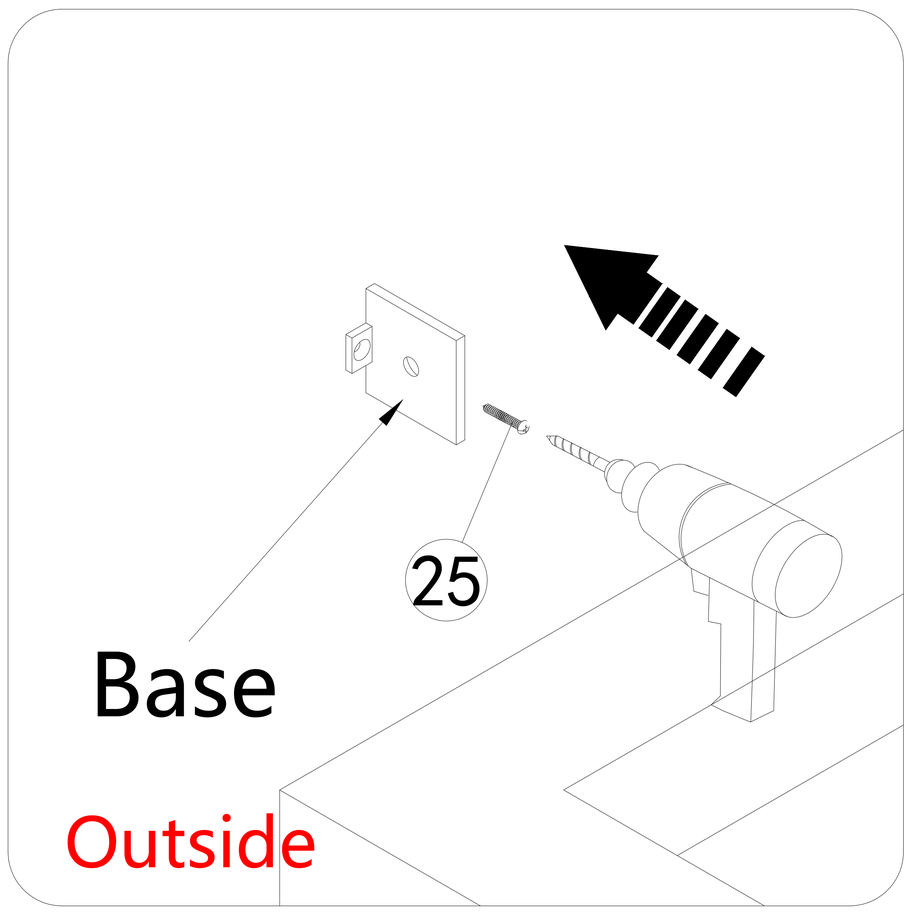

First, disassemble the Wall connecting clip 24 , and then use ST4X40 screws 25 to align the base with the page 8 drilled hole for installation.

STEP 6-7

(Left Hand Assembly)

Install the fixed panel 18 on the top rail 4

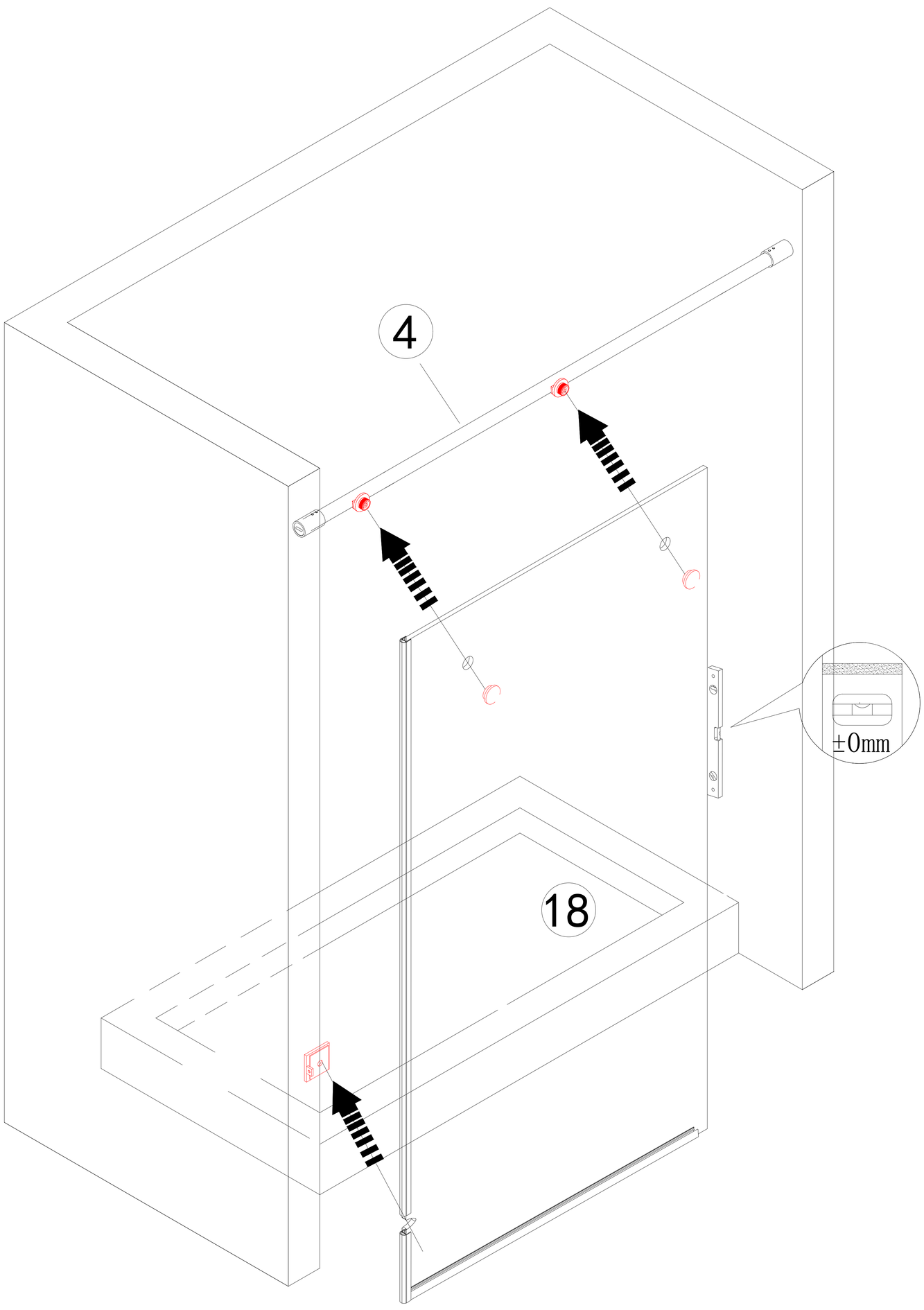

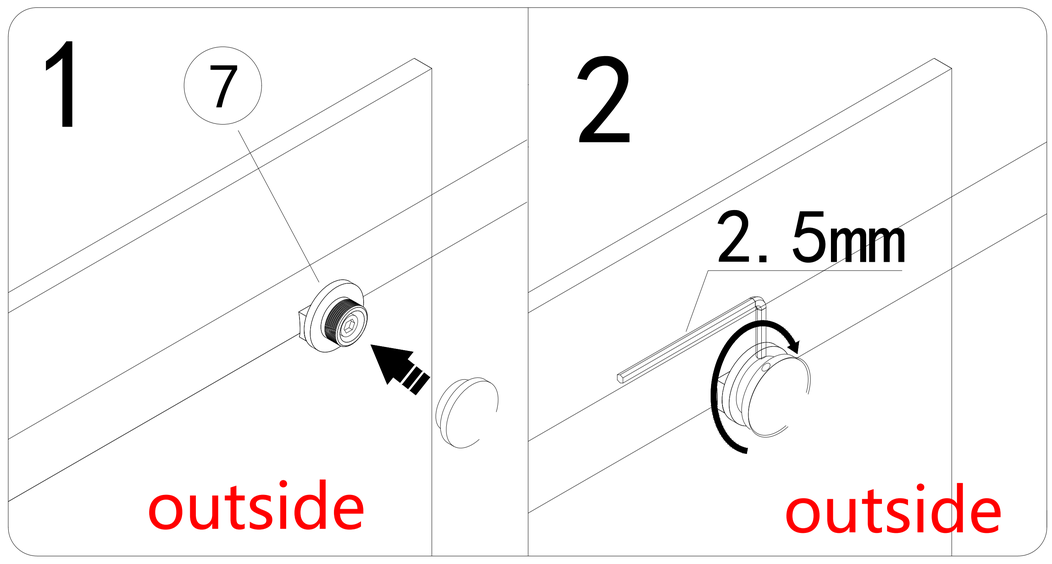

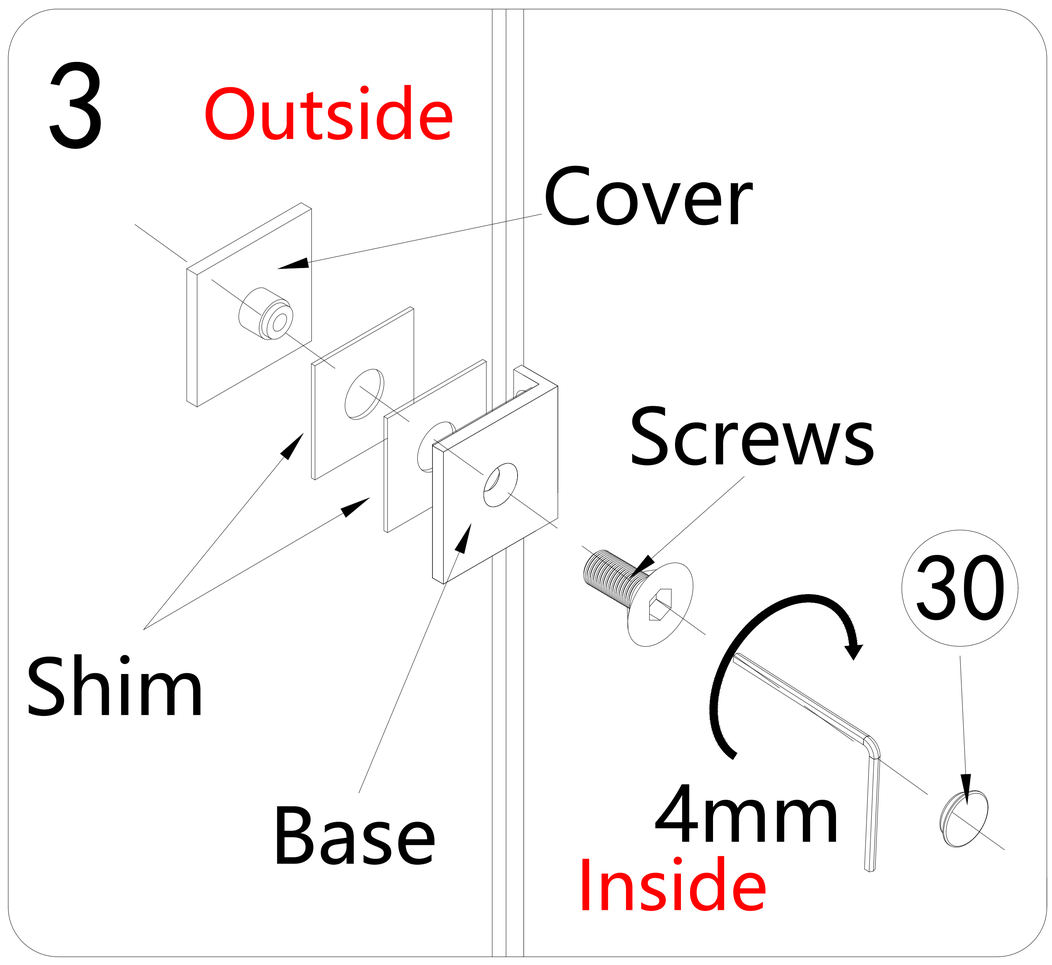



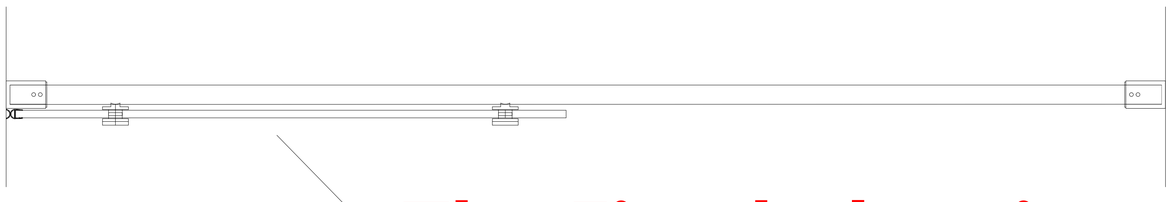

The Fixed glass is installed on the outside of the shower room

Note:The fixed glass is double-sided nano , can be freely installed.

STEP 6-8

(Left Hand Assembly)

Install the sliding block 16

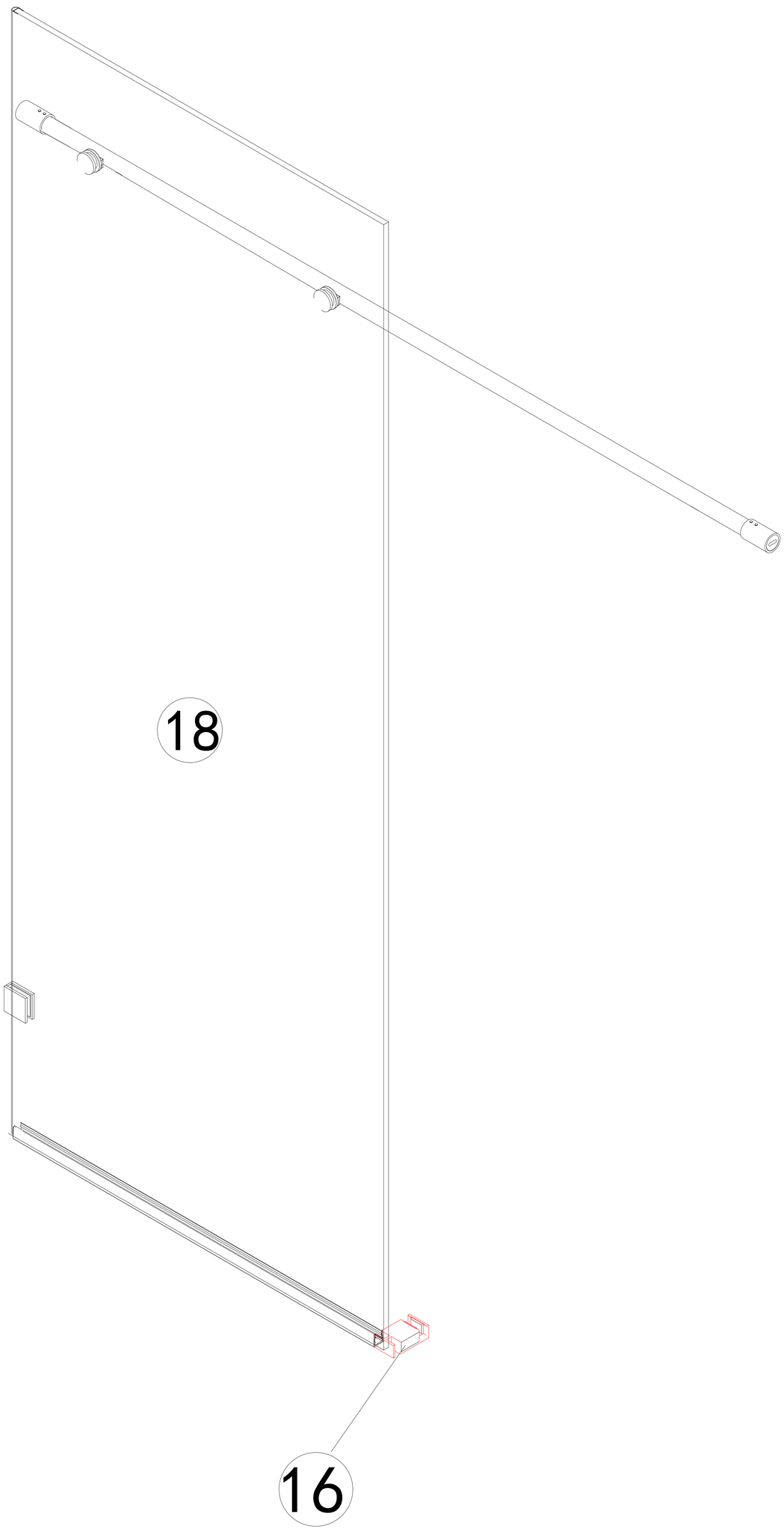

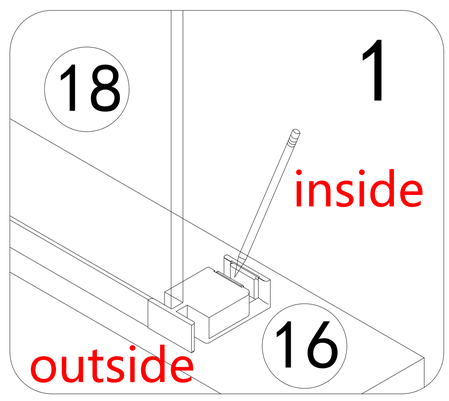

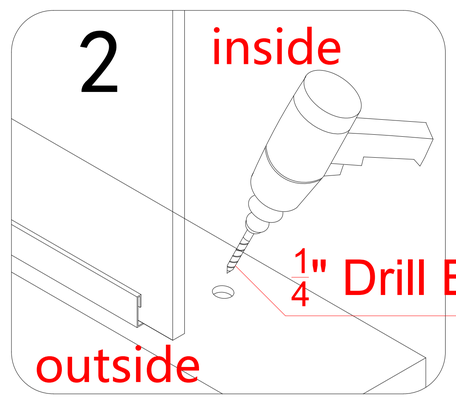

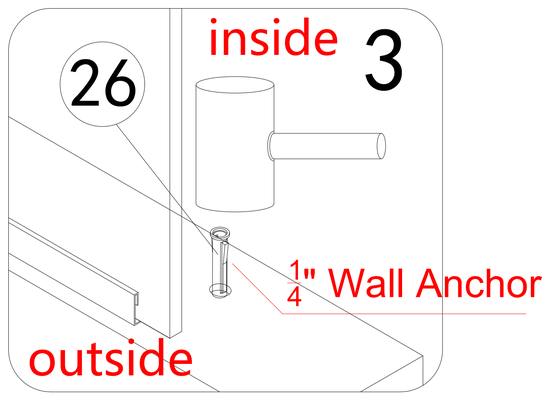

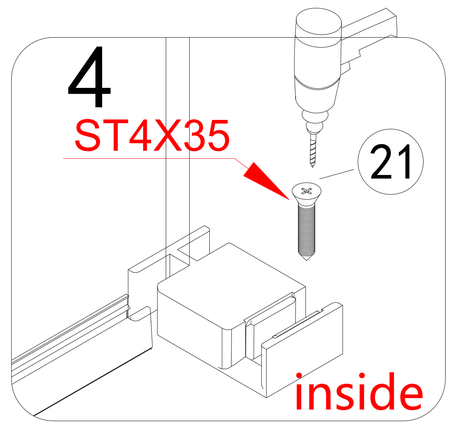

1.Insert the sliding block (16) under the Fixed Panel (18) side and mark it.
2 .Drill ∅ 1/4"(6.4mm) holes.
3. Inject Ø6 Wall Anchor (26) into the hole;
4. Secure the sliding block (16) with ST4X35 screws (21).

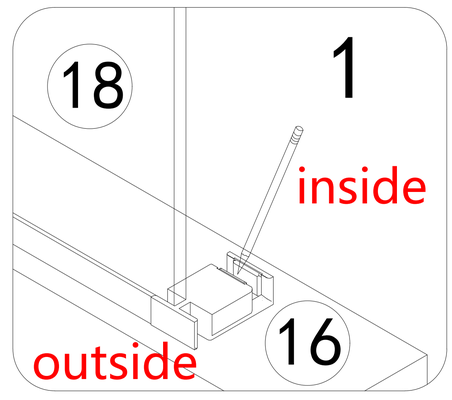

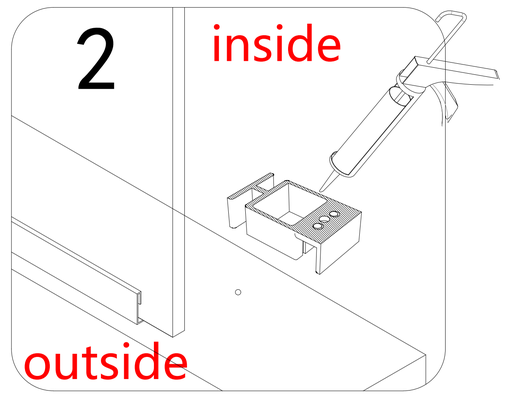

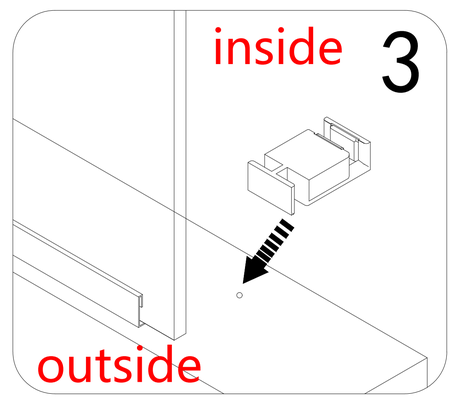

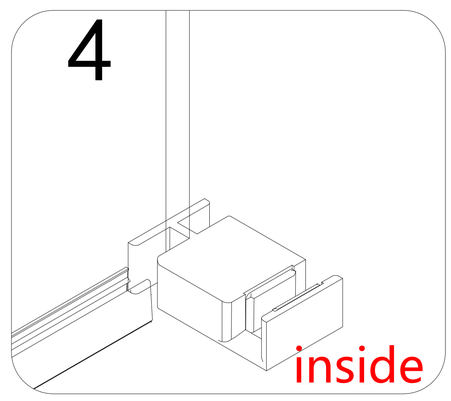

1.This method is applicable for environments when cannot be drilled.
2.Insert the sliding block (16) under the Fixed Panel (18) side and mark it.
3 . As shown in 2, the bottom of the sliding block (16) coated with glass glue for fixation.
4 . As shown in 3, Align the hole at the bottom of the slider with the marked hole and press down.

STEP 6-9

(Left Hand Assembly)

Install the Base Bar 15 and wall decoration cover 13

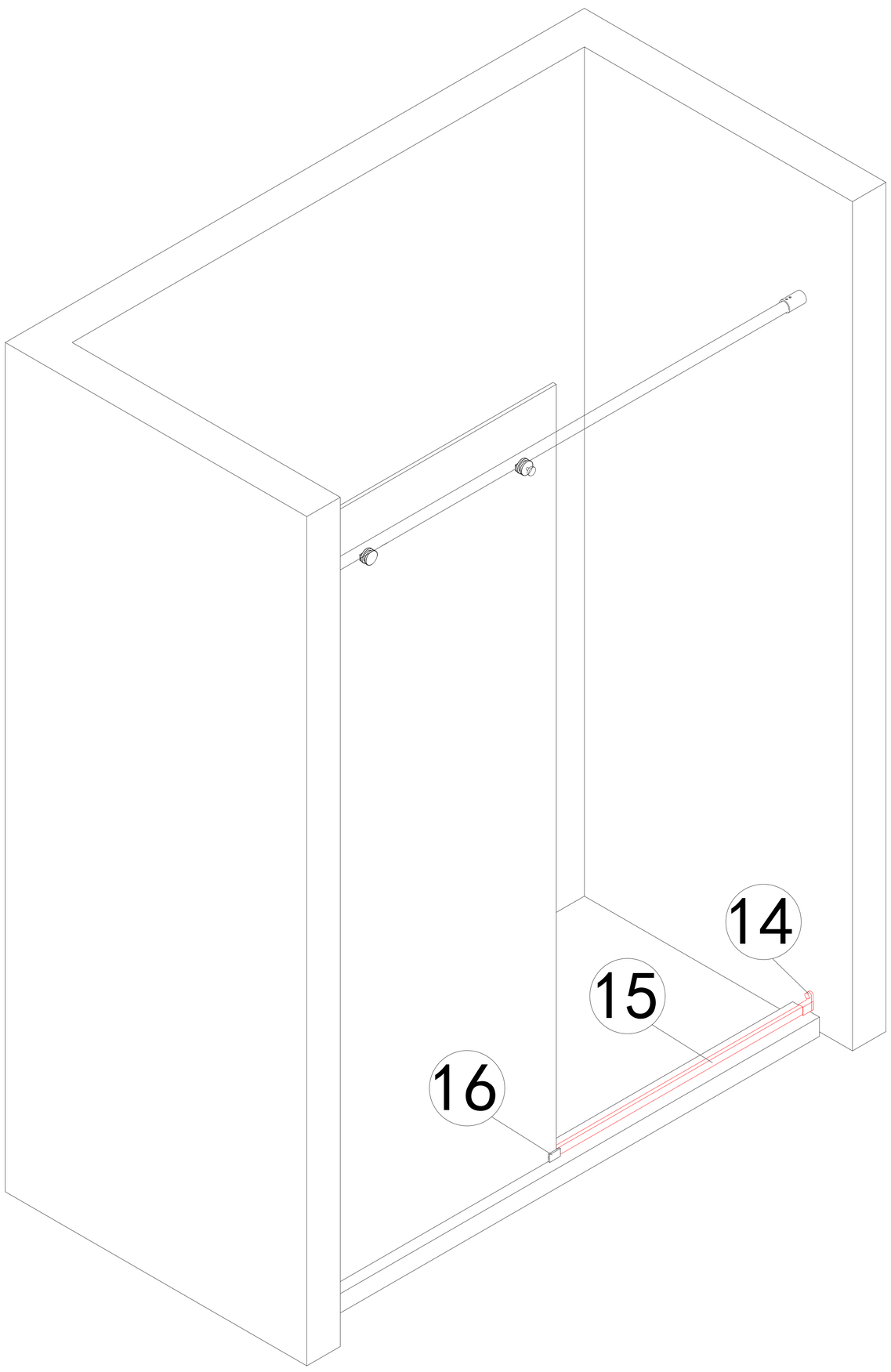

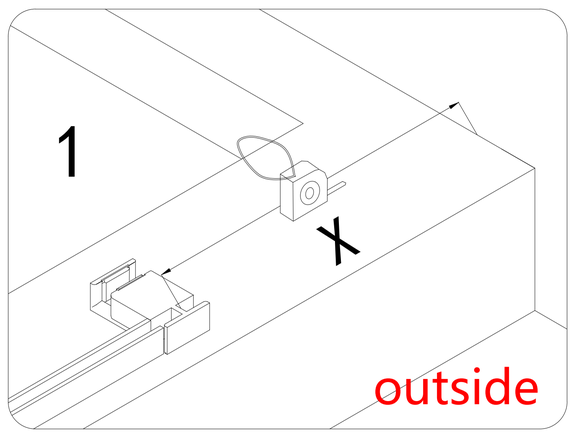

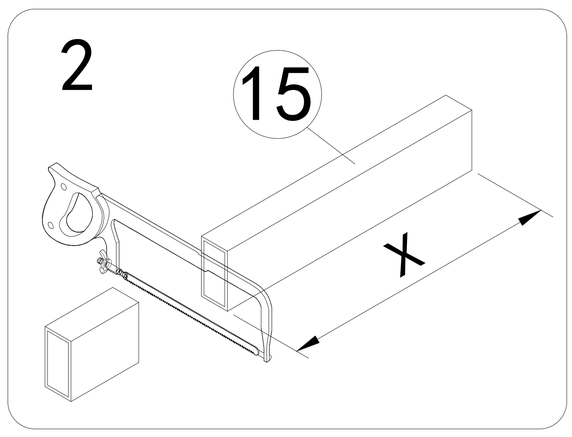

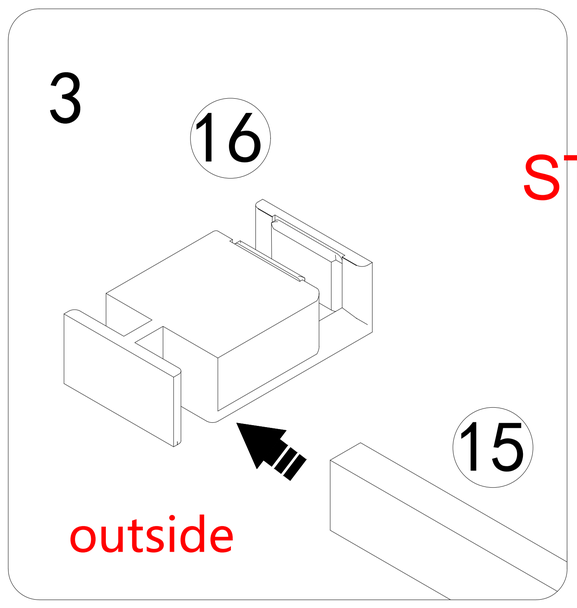

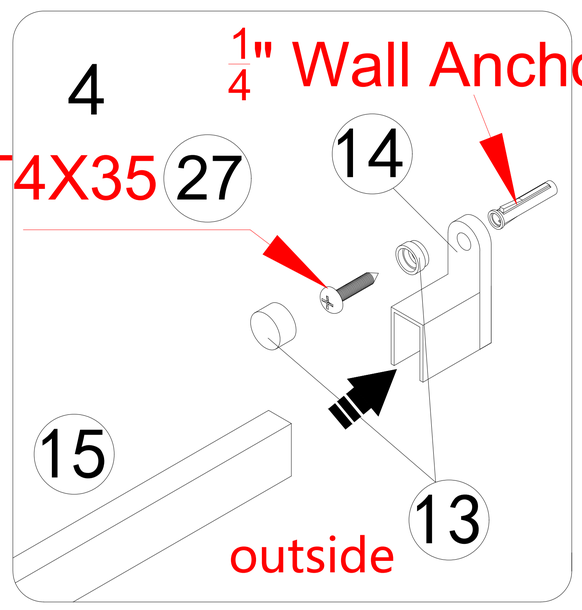

1.Measure the distance from the slot of the Sliding block 16 to the wall surface
2.Cut the Base bar 15 to fit if needed.
3.Insert one end of the Base bar 15 into the gap of Sliding block 16 .
4.Insert the other end into the Bottom Rail Wall Connecting Part 14 ,use 4*35 screw 27 ,fixed to the wall with wall decoration cover 13 .

STEP 6-10

(Left Hand Assembly)

Install the sliding panel 10

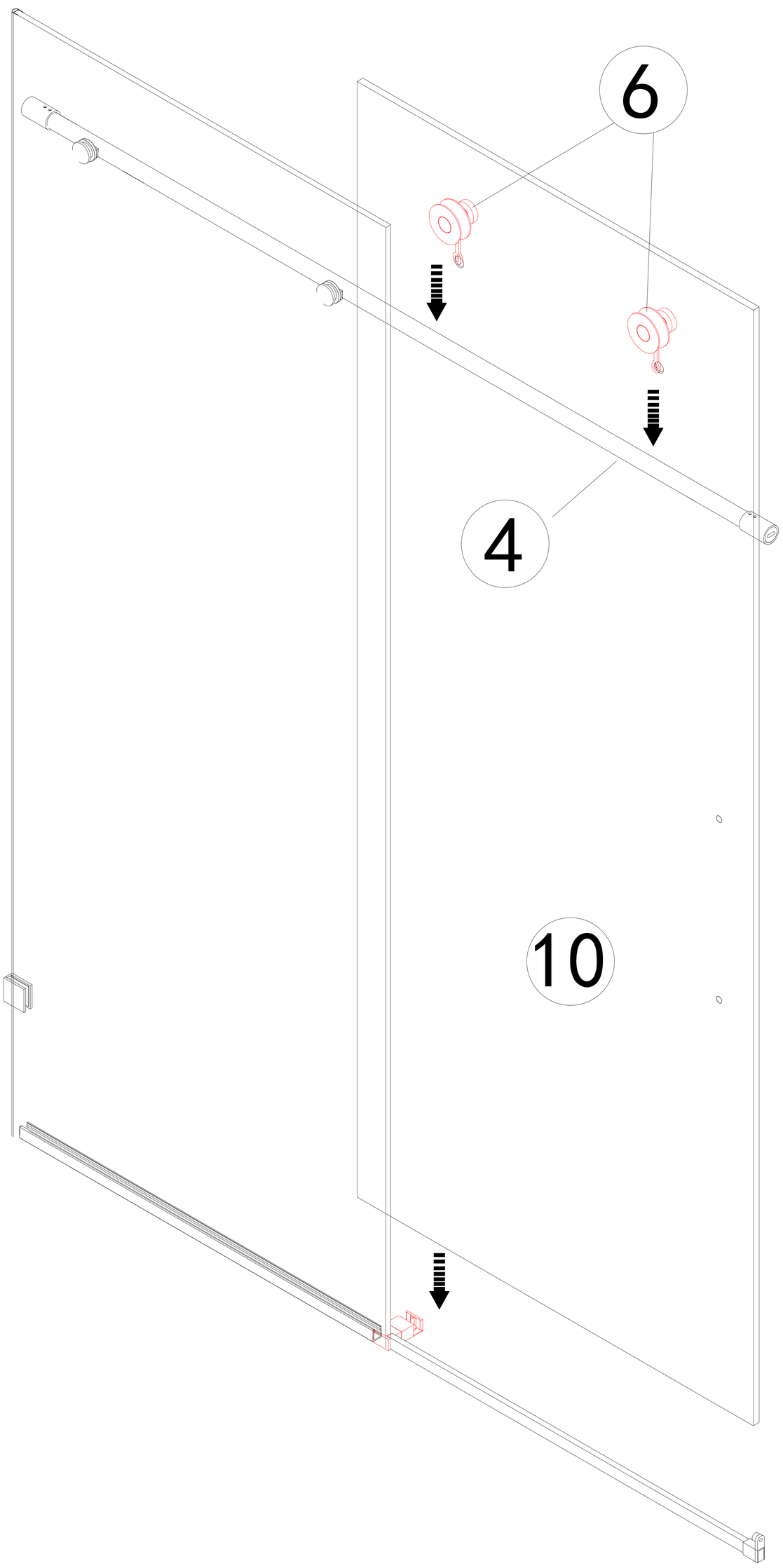

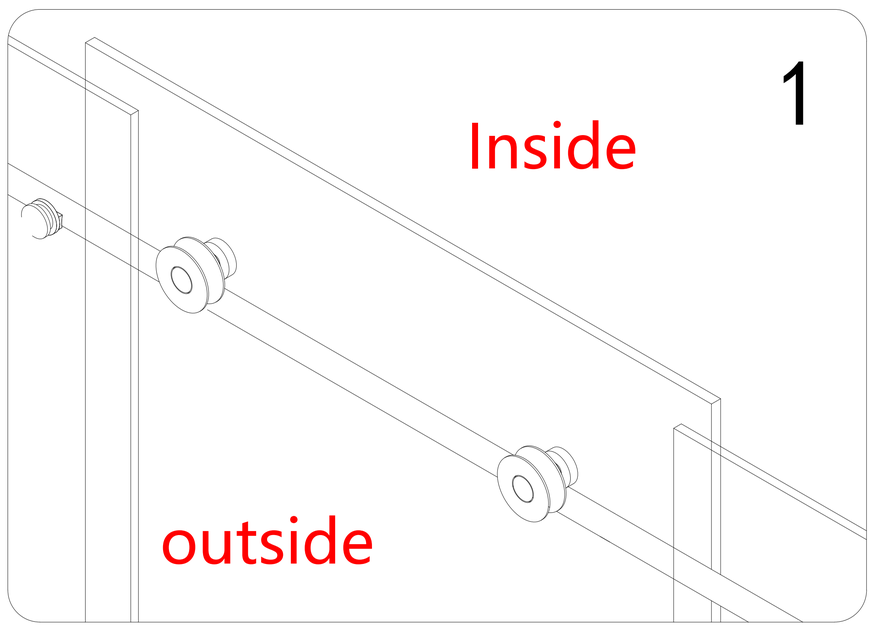

1.Hang the sliding panel 10 on the top rail 4 .

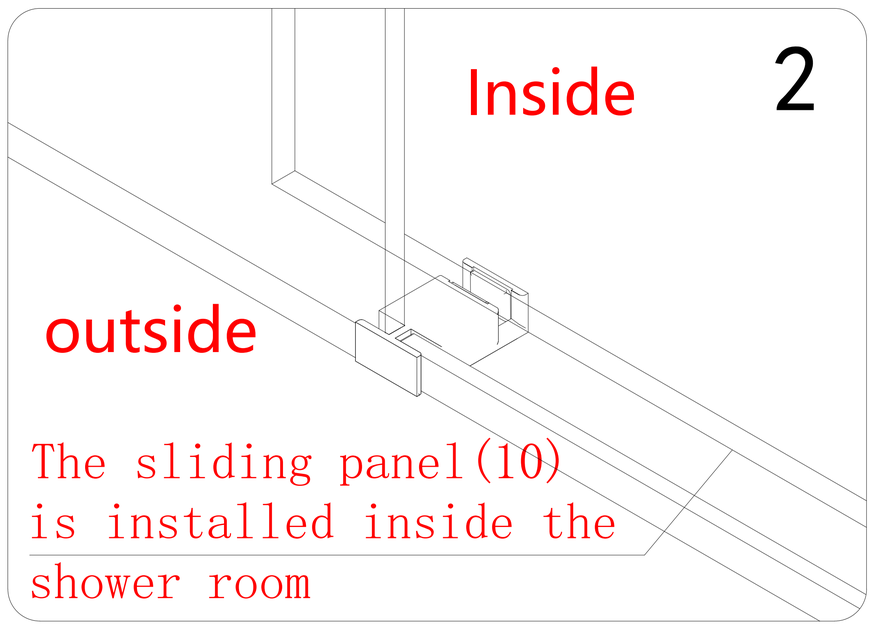

2.Make sure the bottom of the sliding panel 10 loaded into the sliding block 16 .

STEP 6-11

(Left Hand Assembly)

Install the Anti-Jumper (8) on the sliding panel (10)

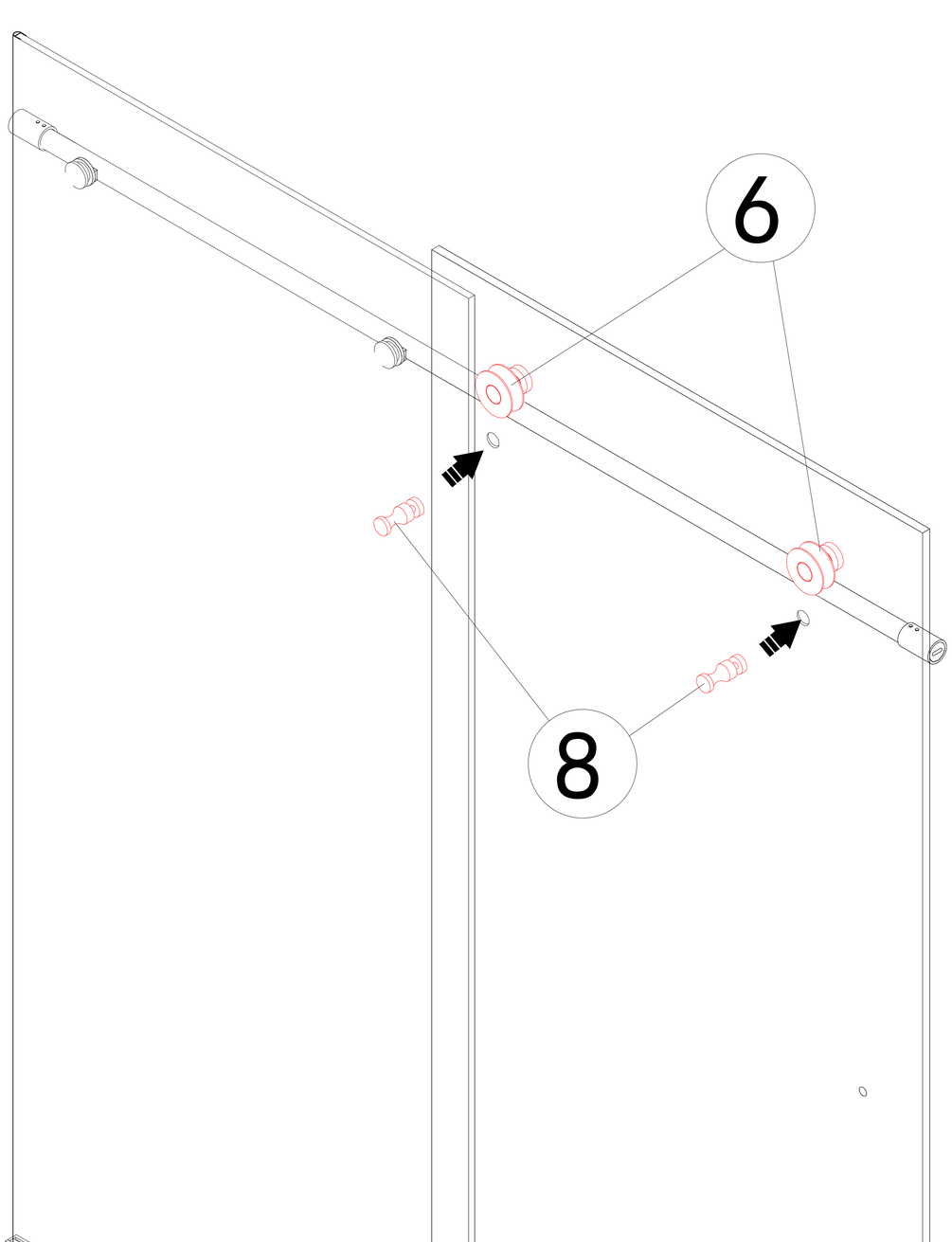

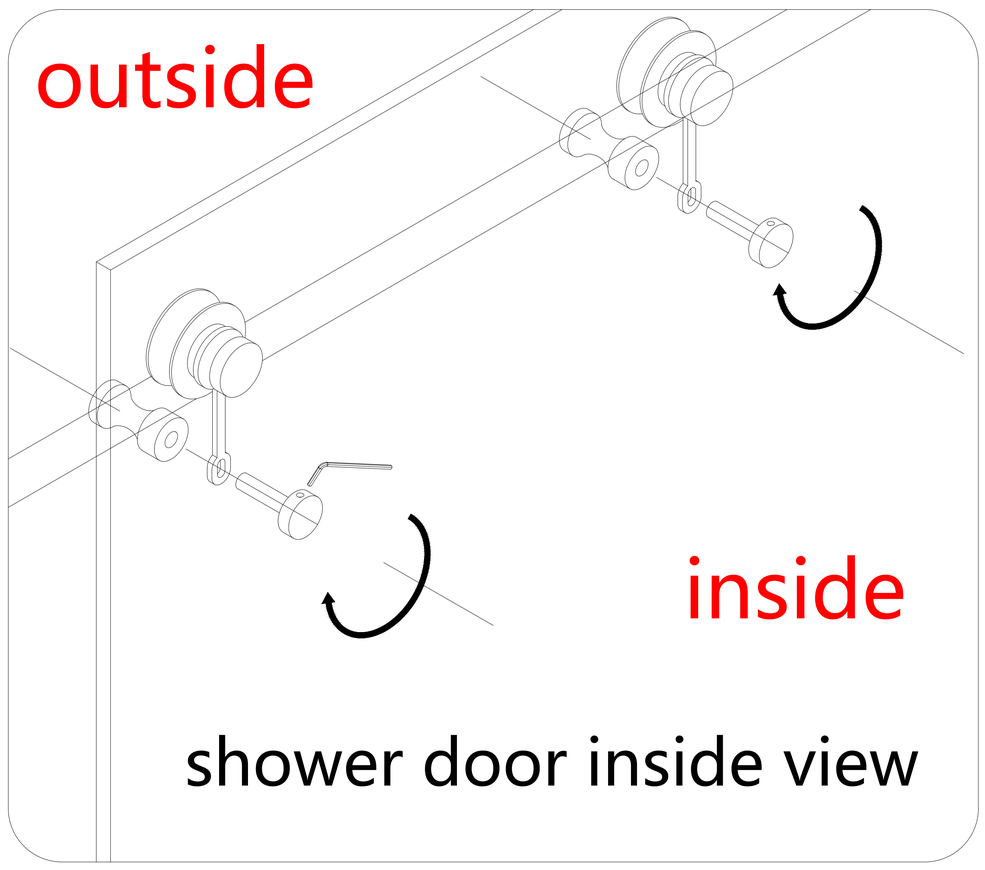

1.Install the Anti-Jumper (8) outside the sliding panel (10) .
2.Use 2.5mm Allen wrench to tight inside.

STEP 6-12

(Left Hand Assembly)

Adjust the height of the sliding panel (10) to ensure it is parallel to the wall surface

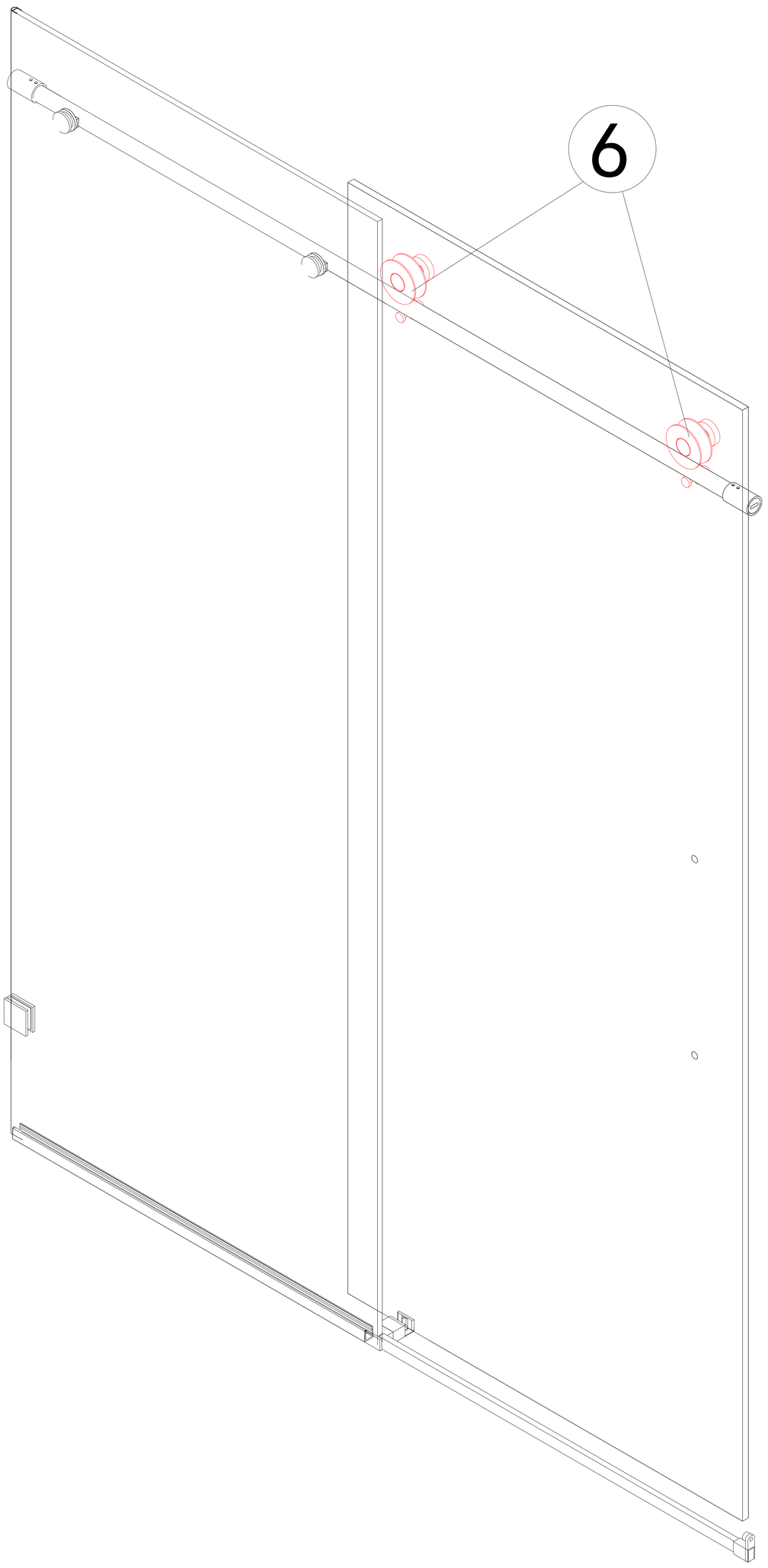

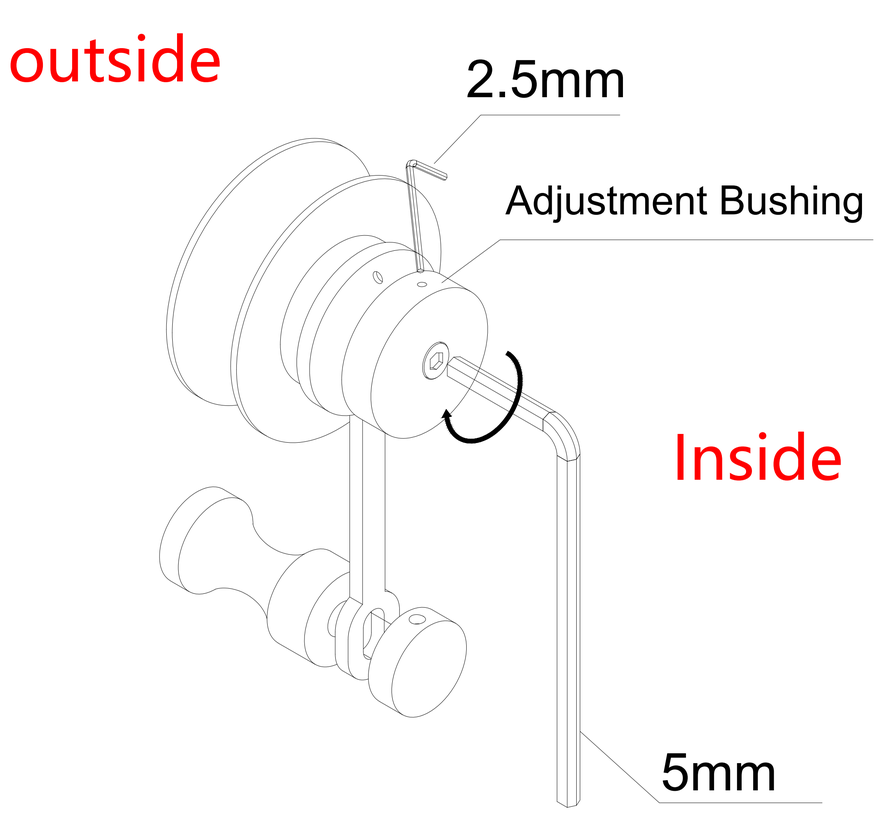

1.Use 2.5mm Allen key to rotate the eccentric shaft of the roller, adjust the height of the sliding panel.
2.Use 5mm Allen key to tight the roller.

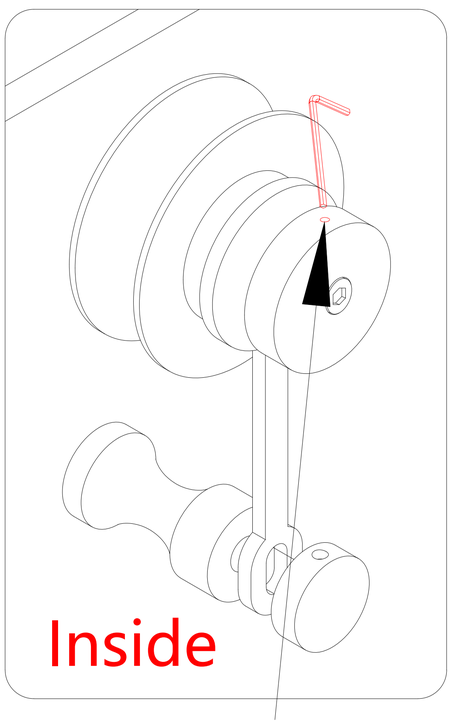

When the position of the small hole is facing upwards, the height of the sliding panel (10) is the lowest

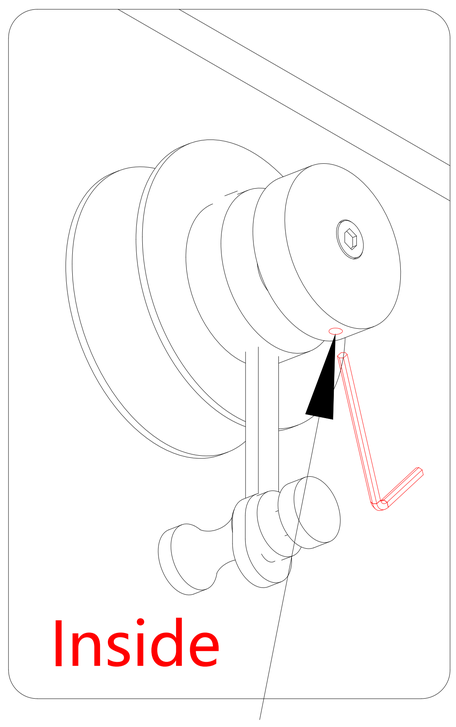

When the position of the small hole is facing downwards, the height of the sliding panel (10) is the highest

STEP 6-13

(Left Hand Assembly)

Install the Bumper Strip ⑨ and F-form waterproof strip ⑪ .

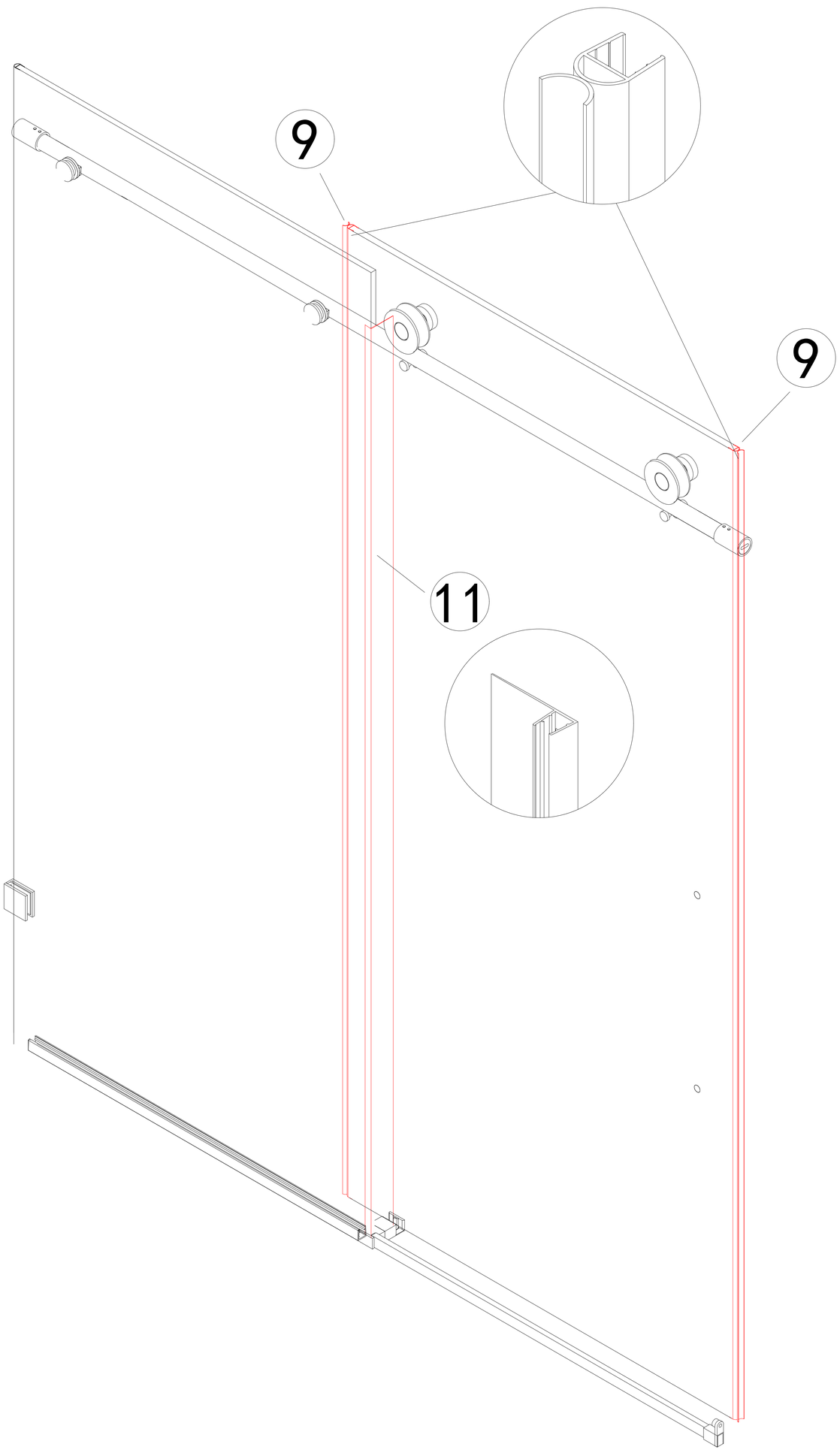

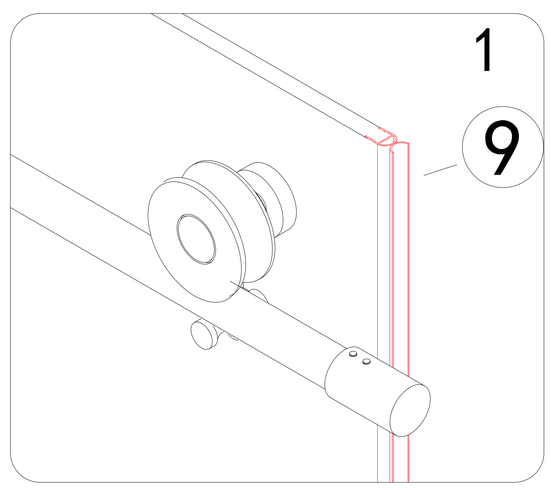

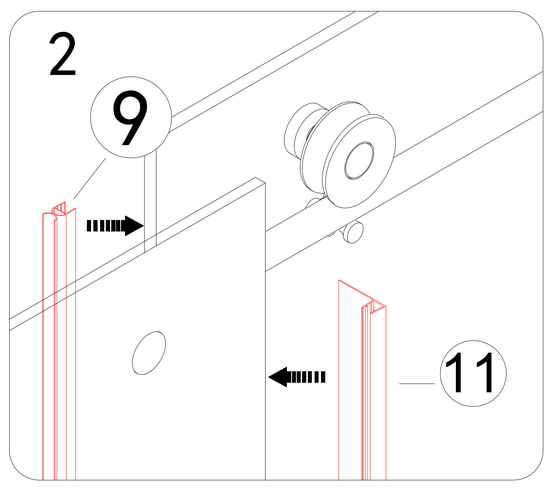

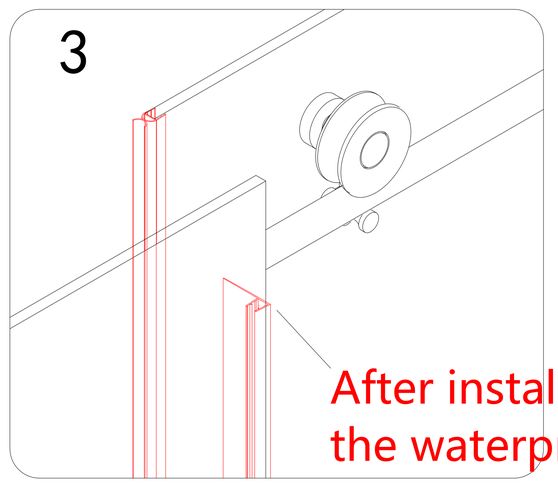

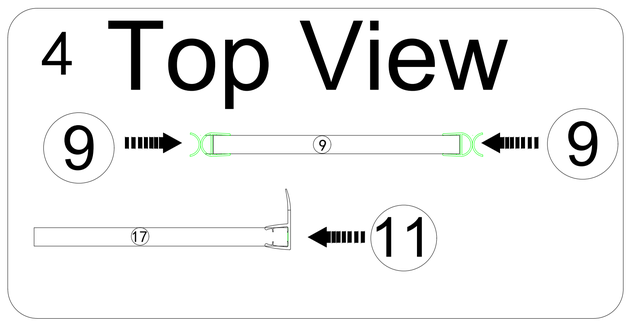

After installing the shower door,cut the waterproof strip under the track

STEP 6-14

(Left Hand Assembly)

Install the Handle 12 .

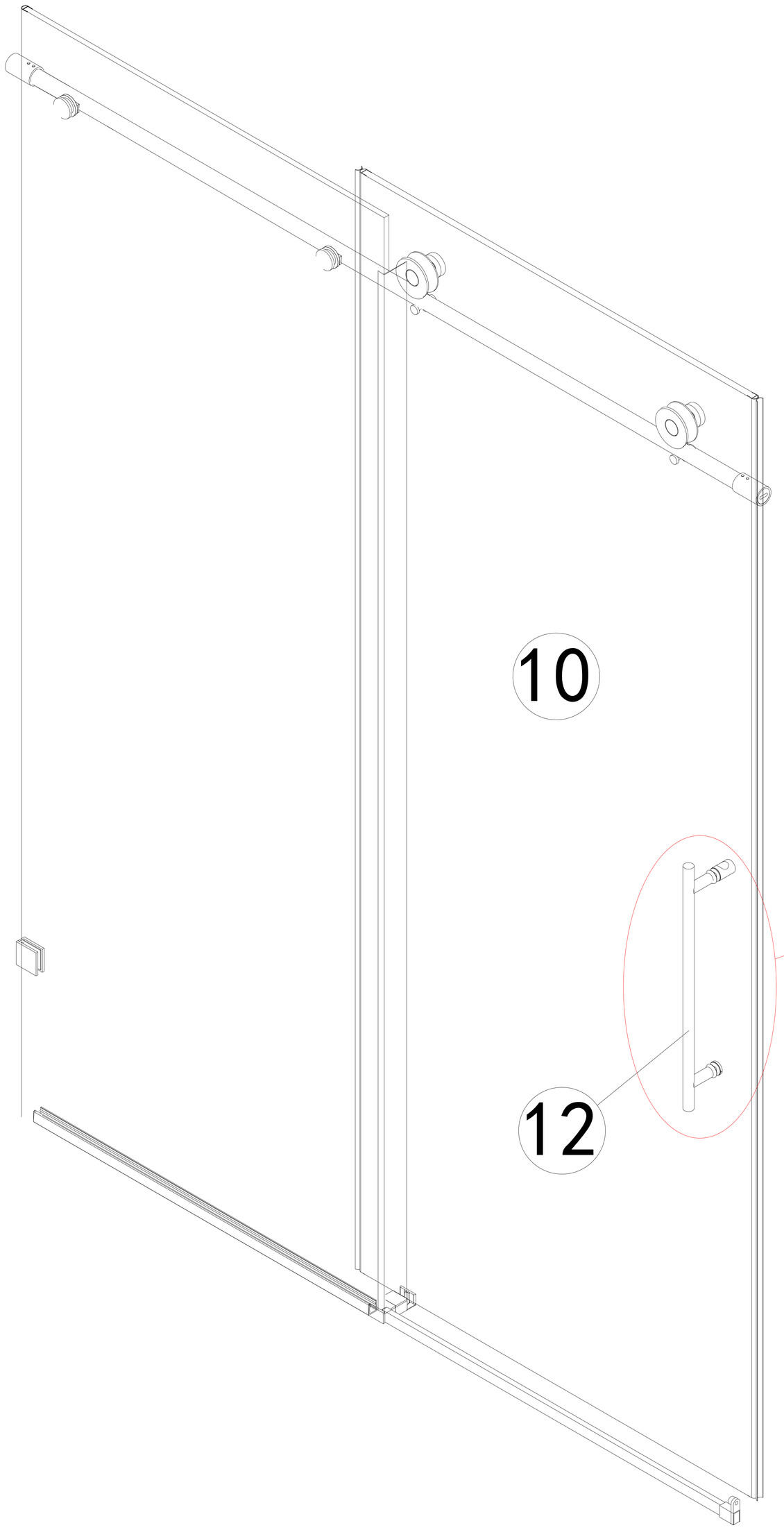

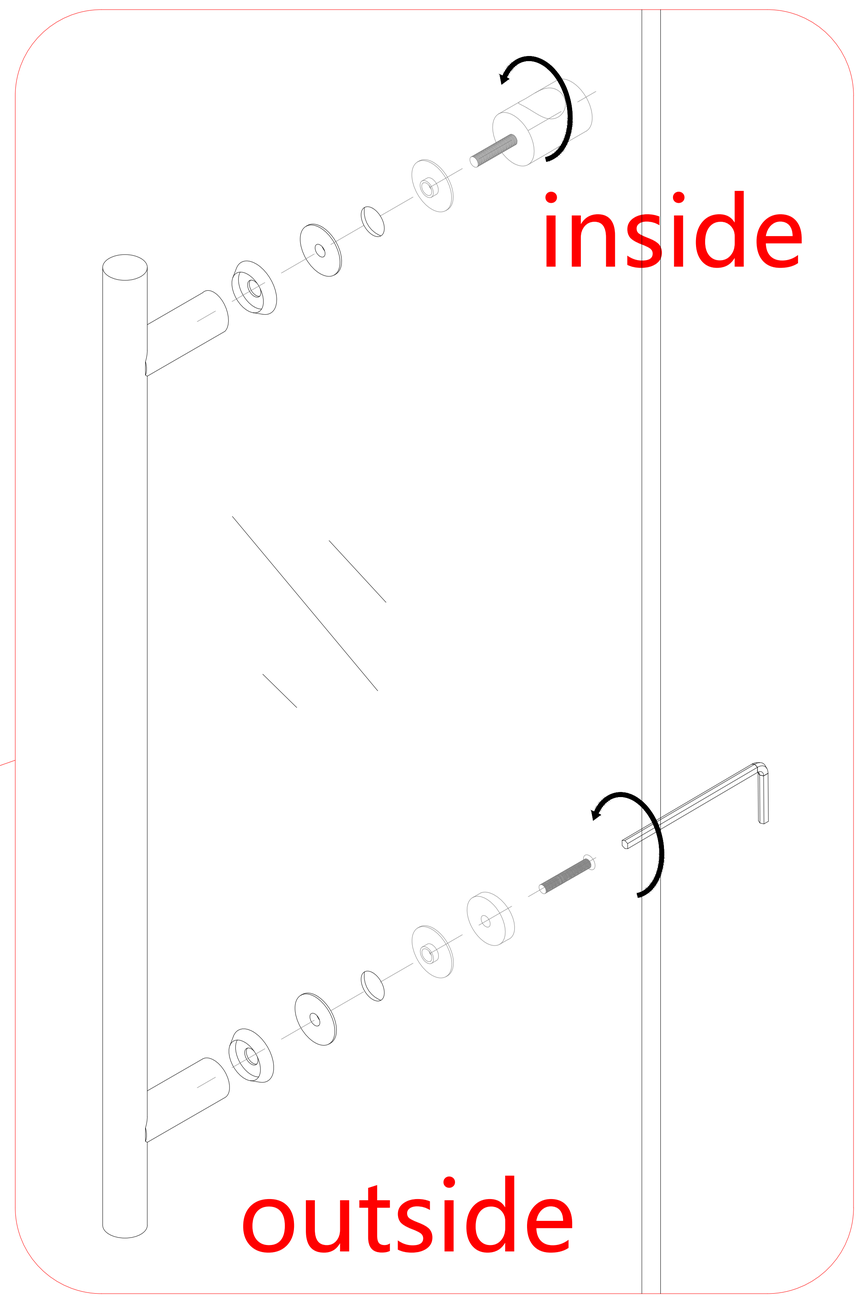

Use 2.5mm Allen wrench to tight.

STEP 6-15

(Right Hand Assembly)

Preparation work before installing the Fixed Panel 18

1. Use the Allen key to loosen the outer shell and remove it.

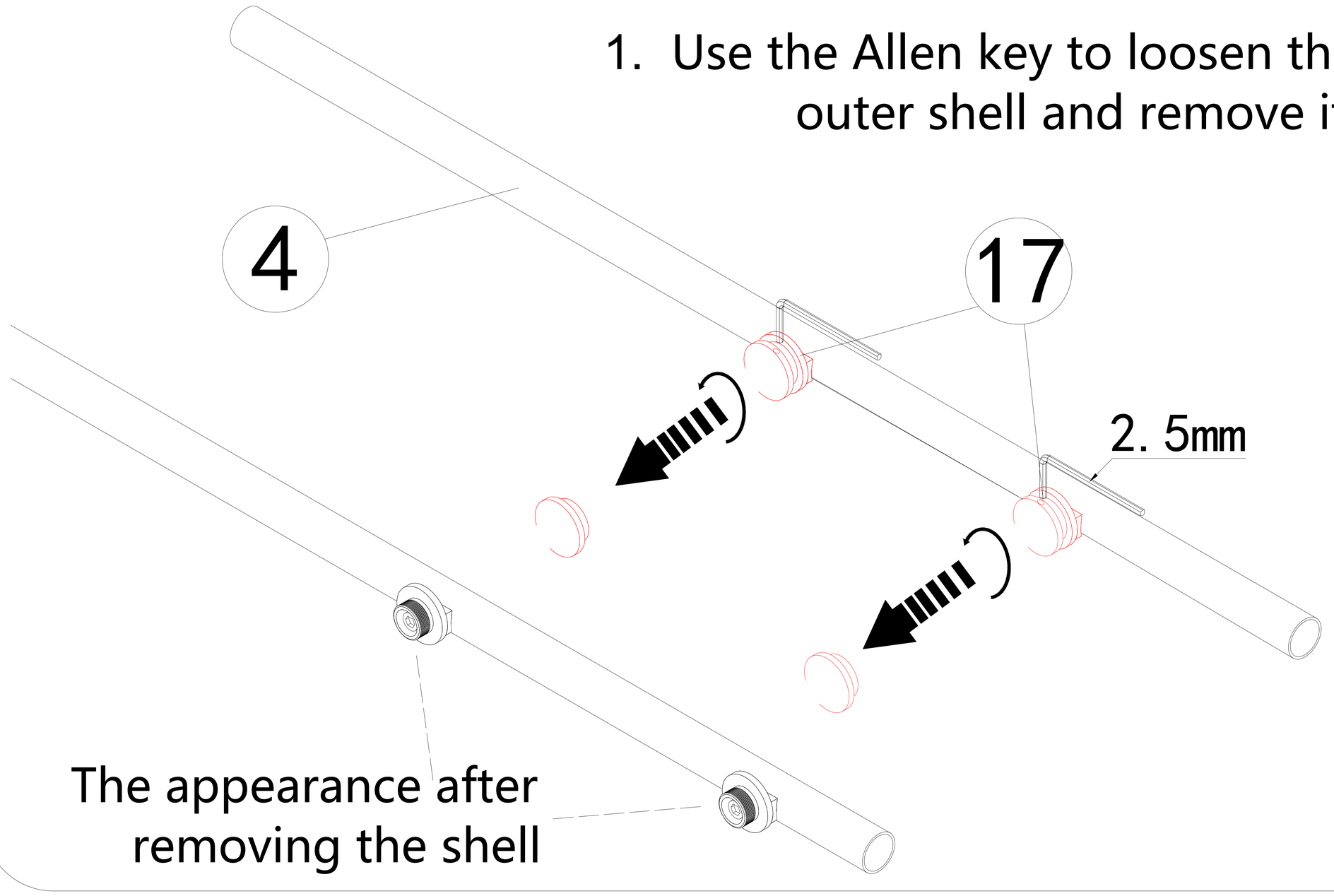

STEP 6-16

(Right Hand Assembly)

Preparation work before installing the Top Rail 4

1. Insert the Rail Wall Connector (3-B) into the two sides of pull rod.
2. Utilize the 2.5mm Allen key to tighten the screw inside.

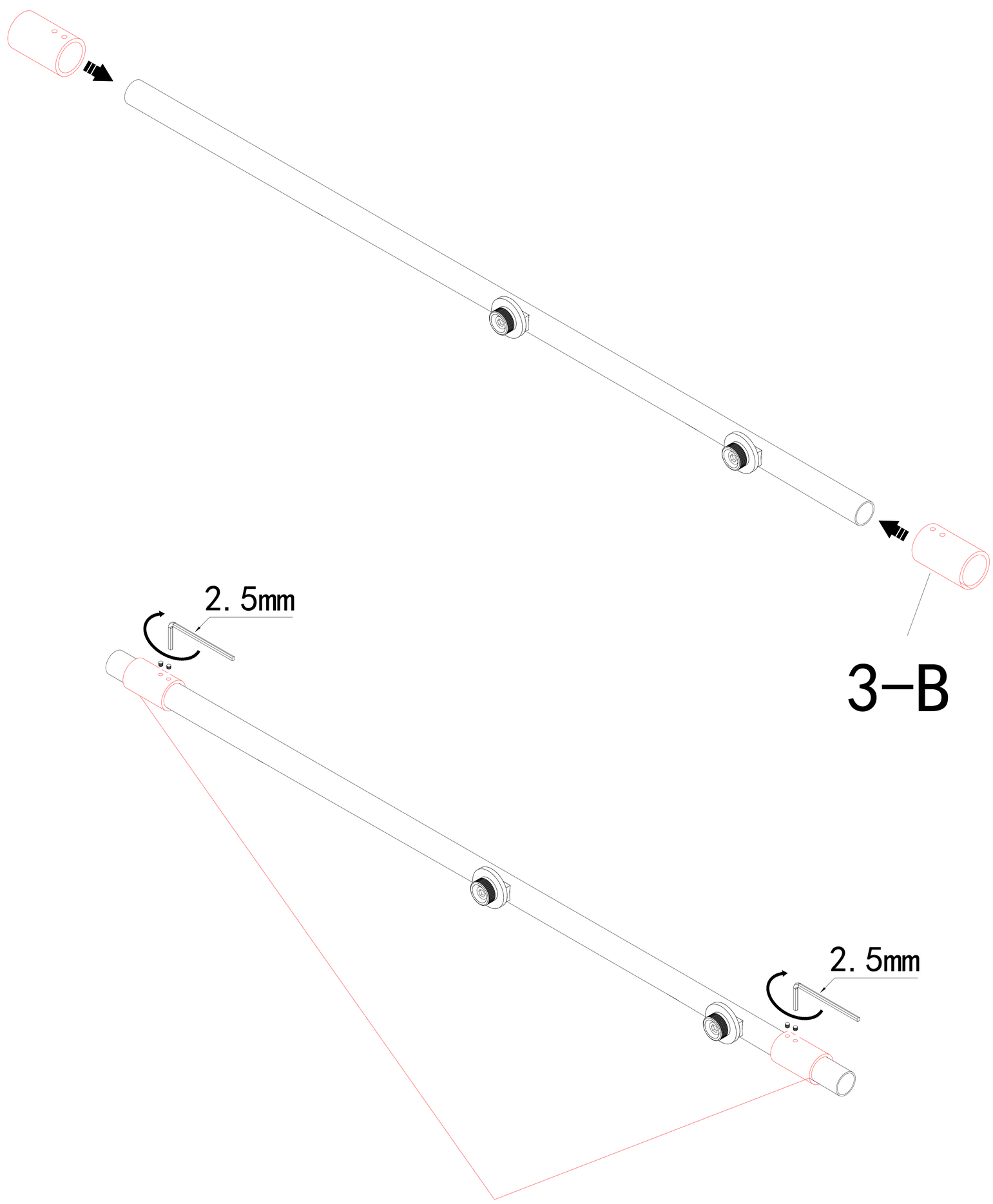

(Don't tighten it too tightly, as long as the part can't move)

STEP 6-17

(Right Hand Assembly)

Install the roller assembly (6) on the sliding panel (10)

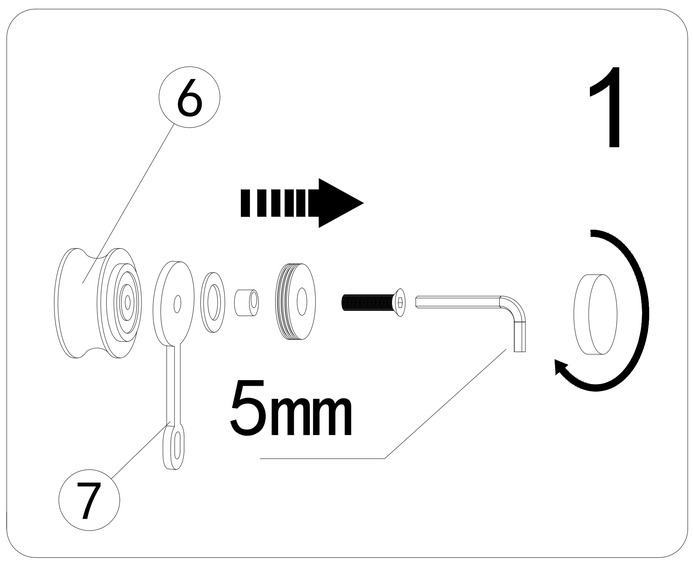

1. Disassemble the roller assembly (6) as shown, unscrew the cover and loosen the big bolt.

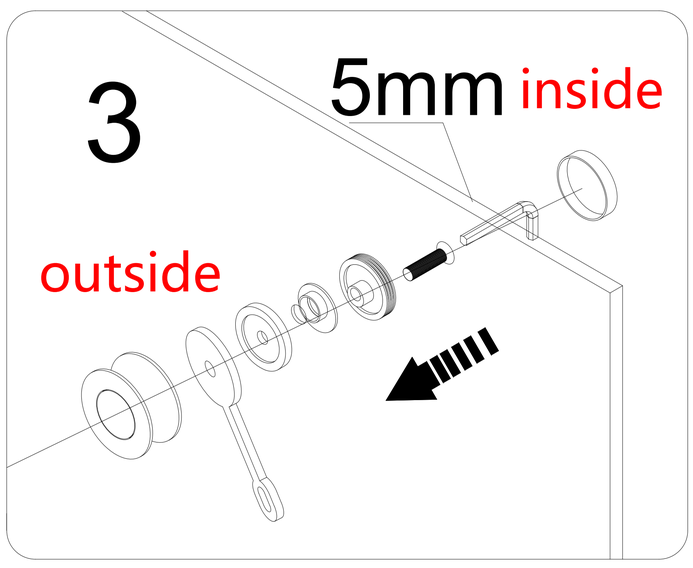

2. Reassemble the two roller assembly (6) onto the sliding panel (10) as shown in the picture. When finished, move the sliding panel (10) to the shower area.

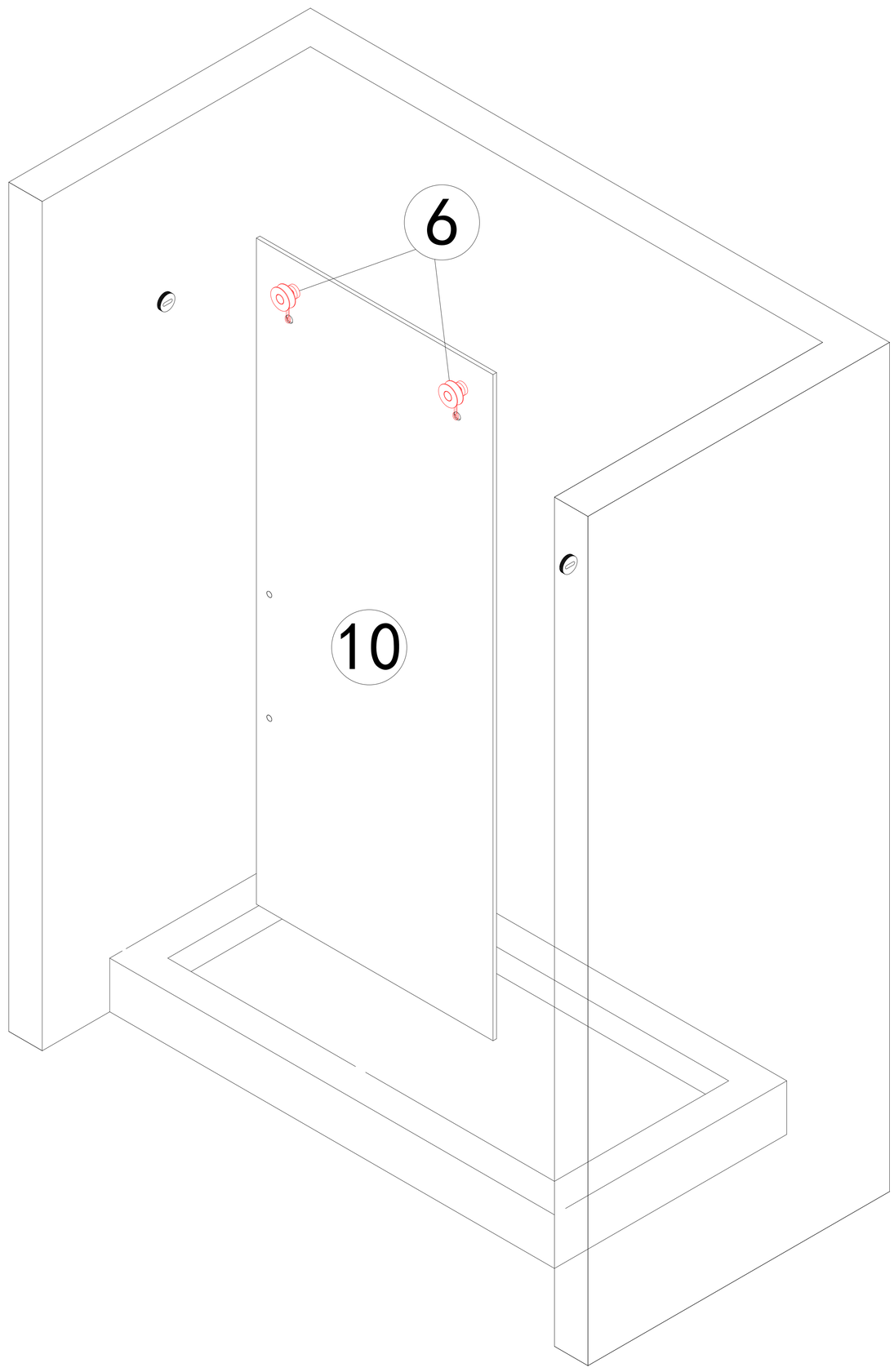

Move the active panel to the shower area.
Lay the glass on a soft padded surface!

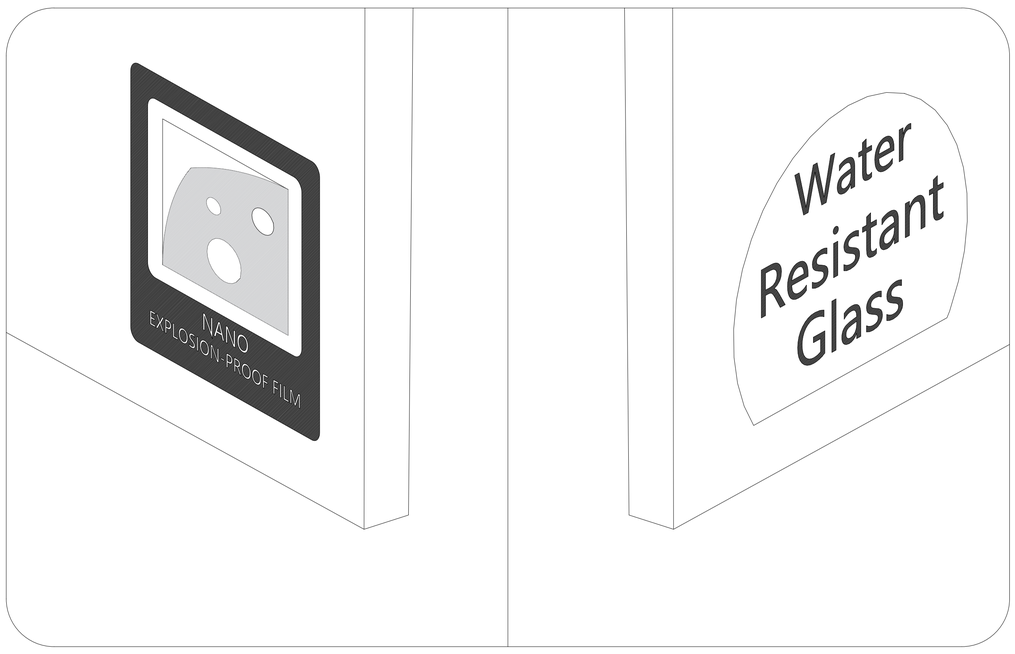

Note:The active glass is double-sided nano , can be freely installed.

STEP 6-18

(Right Hand Assembly)

Install the top rail ④ on the rail wall connector ③

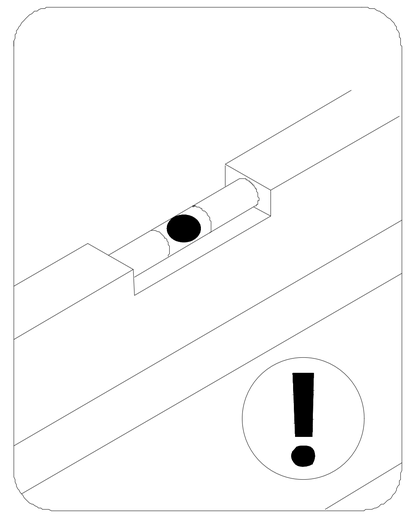

Threshold must be level

1.Screwing the rod and Wall Connector (3-B)in the Wall Connector(3-A).
2.Tightening by 2.5mm Allen Wrench.

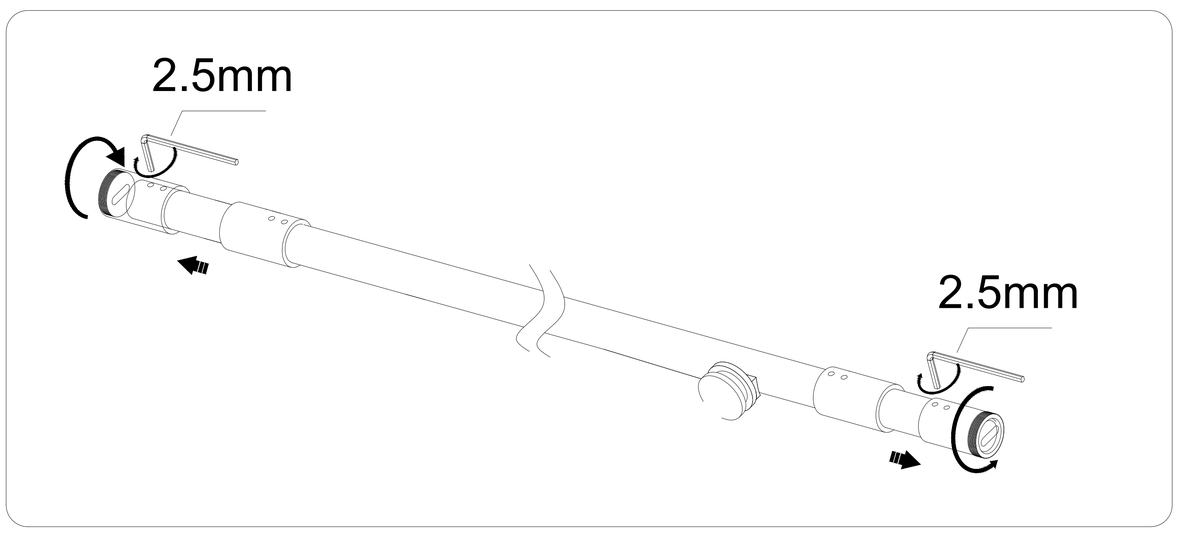

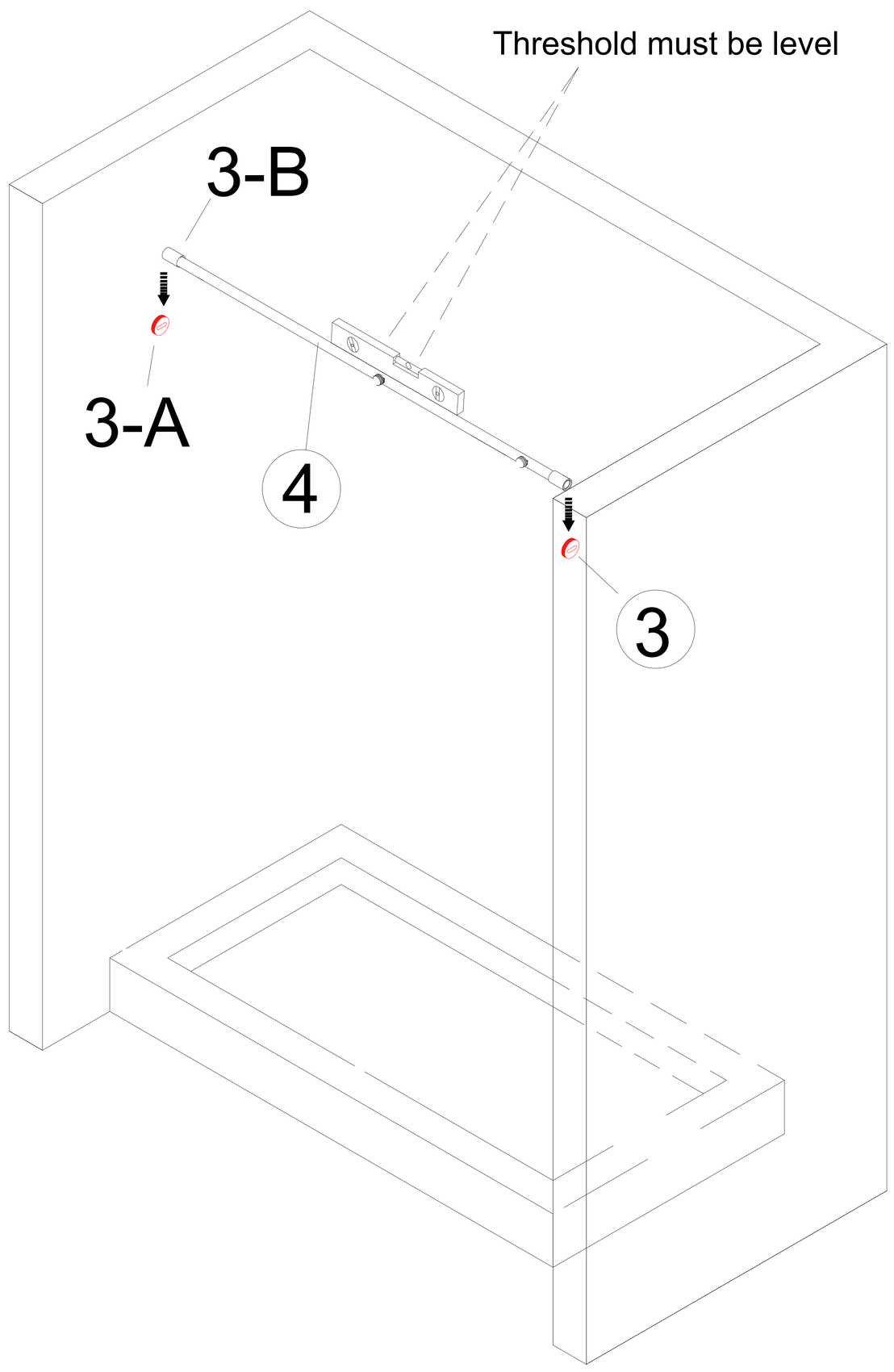

STEP 6-19

(Right Hand Assembly)

Install the Waterproof strip 23 and U-form waterproof strip 19 on the Fixed Panel 18

After installation, please place the glass on a soft ground!

Note:the Waterproof strip 23 needs to be cut according to the position of the Wall connecting clip 24 otherwise it will affect the installation!

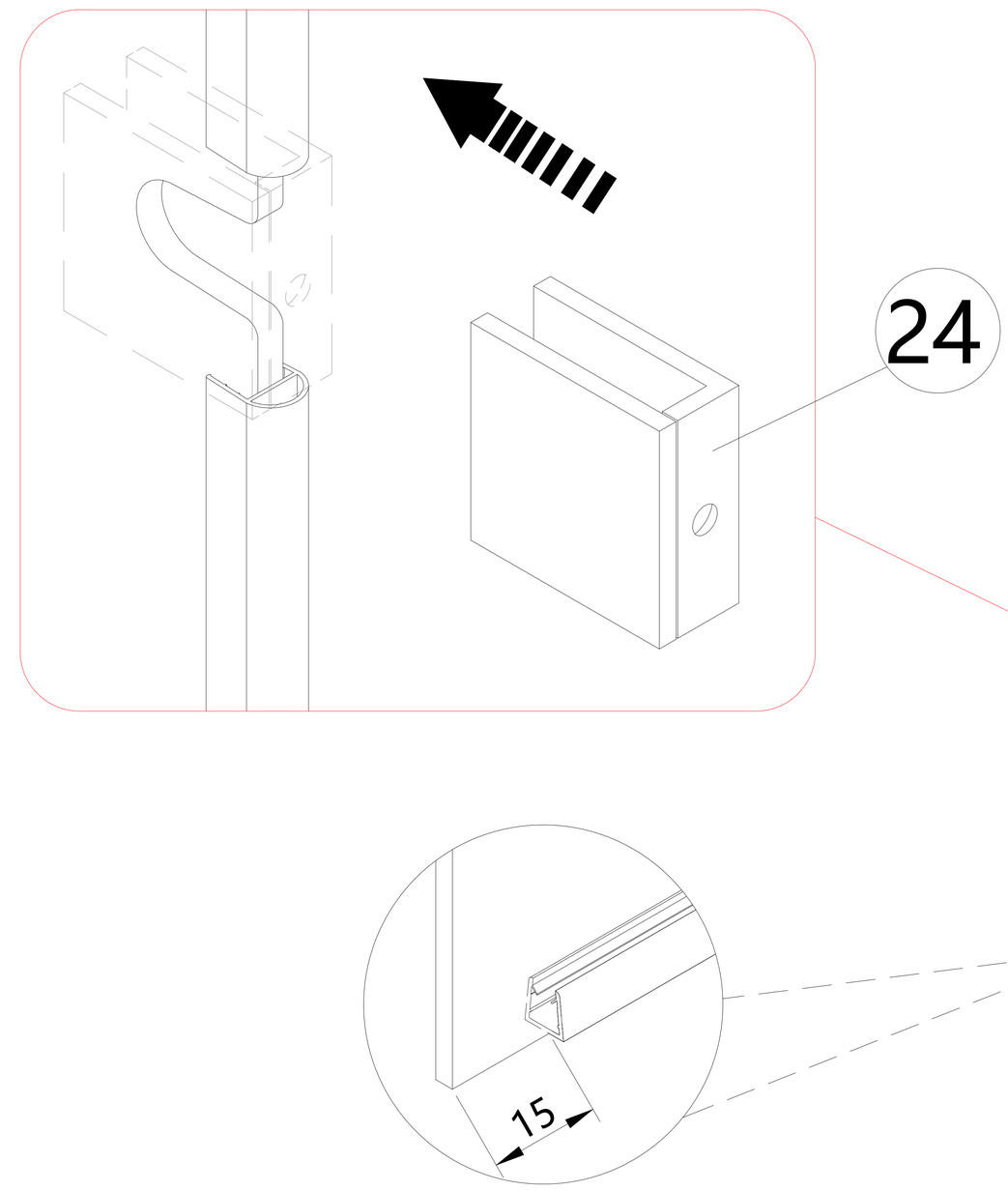

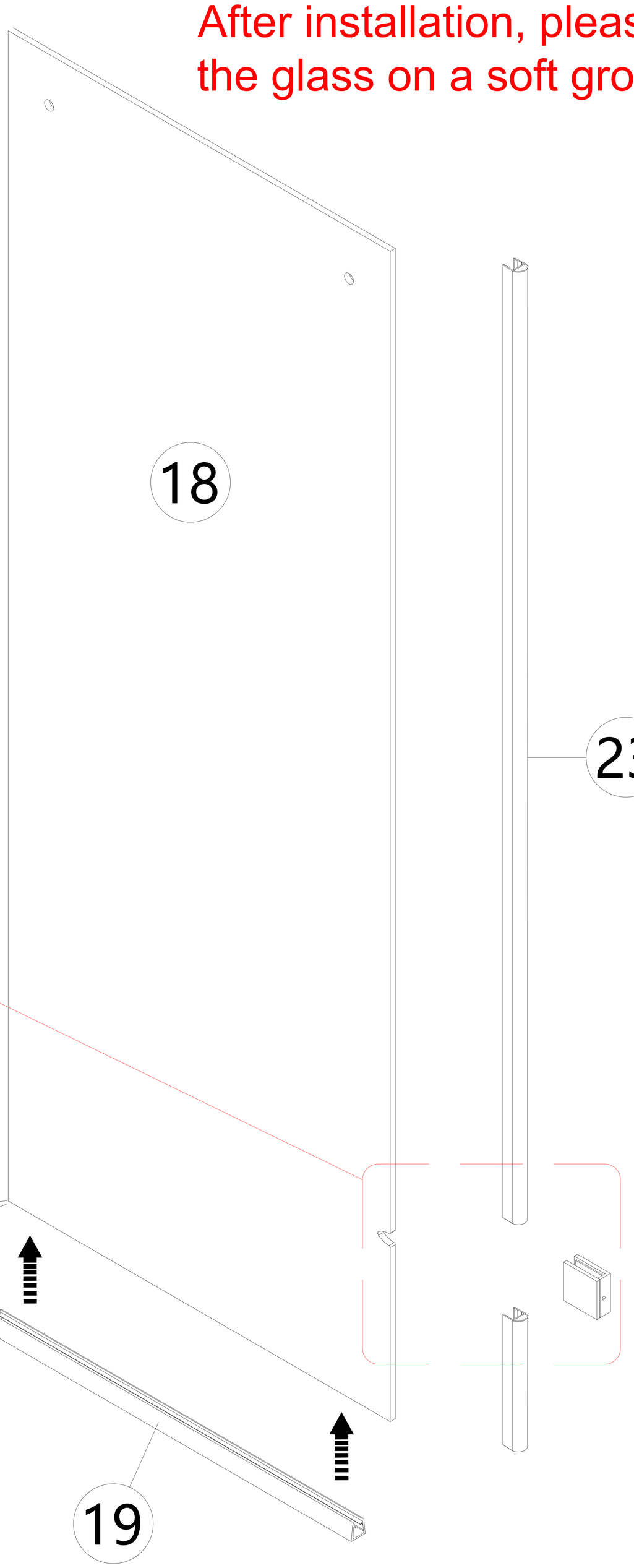

The waterproot strip is 15mm away from outside of the galss.

STEP 6-20

(Right Hand Assembly)

Preparation work before installing the Wall connecting clip 24

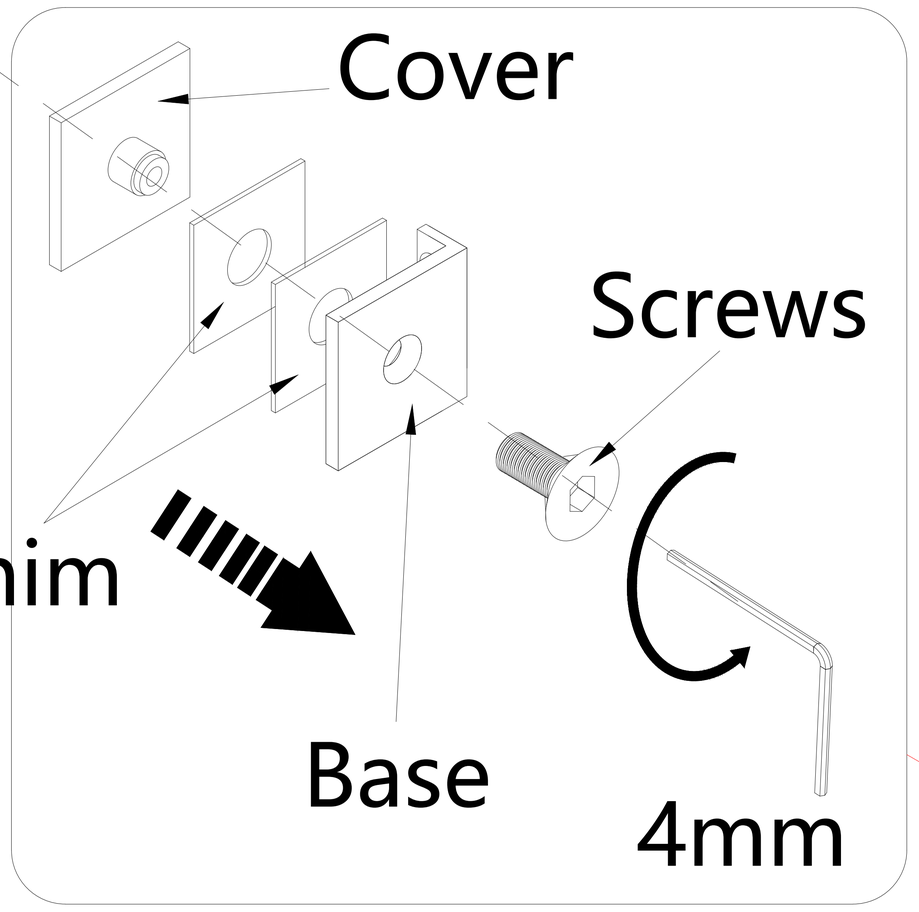

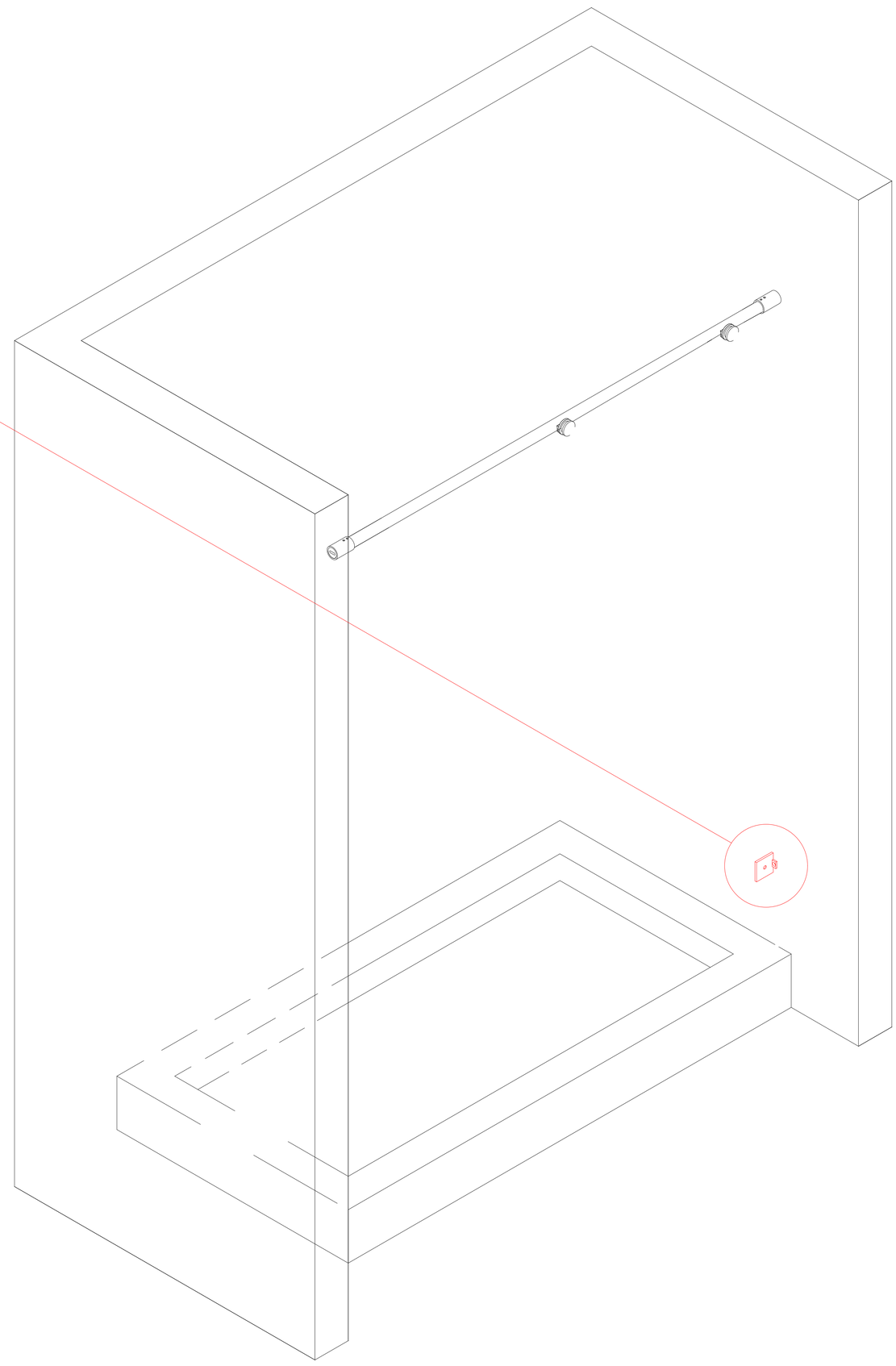

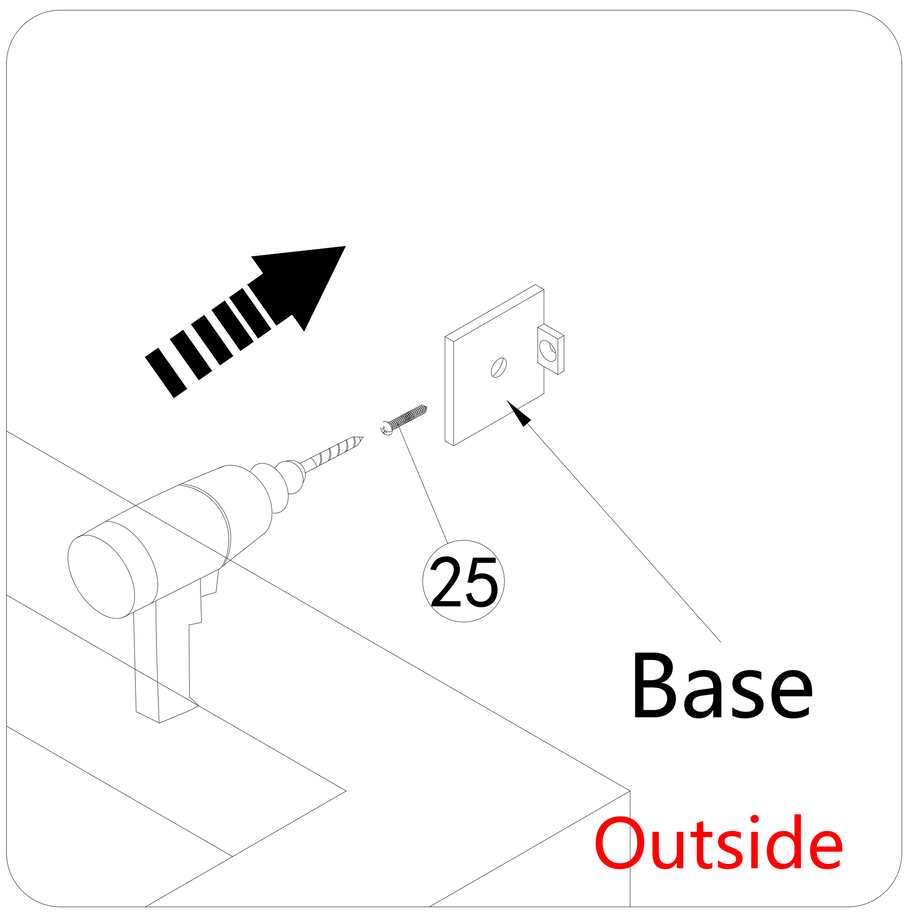

First, disassemble the Wall connecting clip 24 , and then use ST4X40 screws 25 to align the base with the page 8 drilled hole for installation.

STEP 6-21

(Right Hand Assembly)

Install the fixed panel 18 on the top rail 4

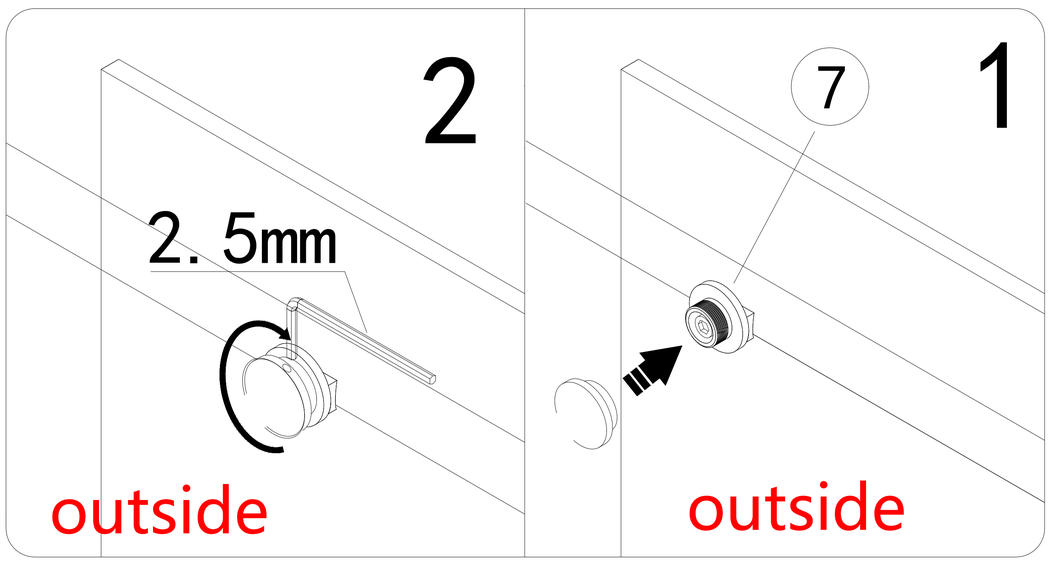

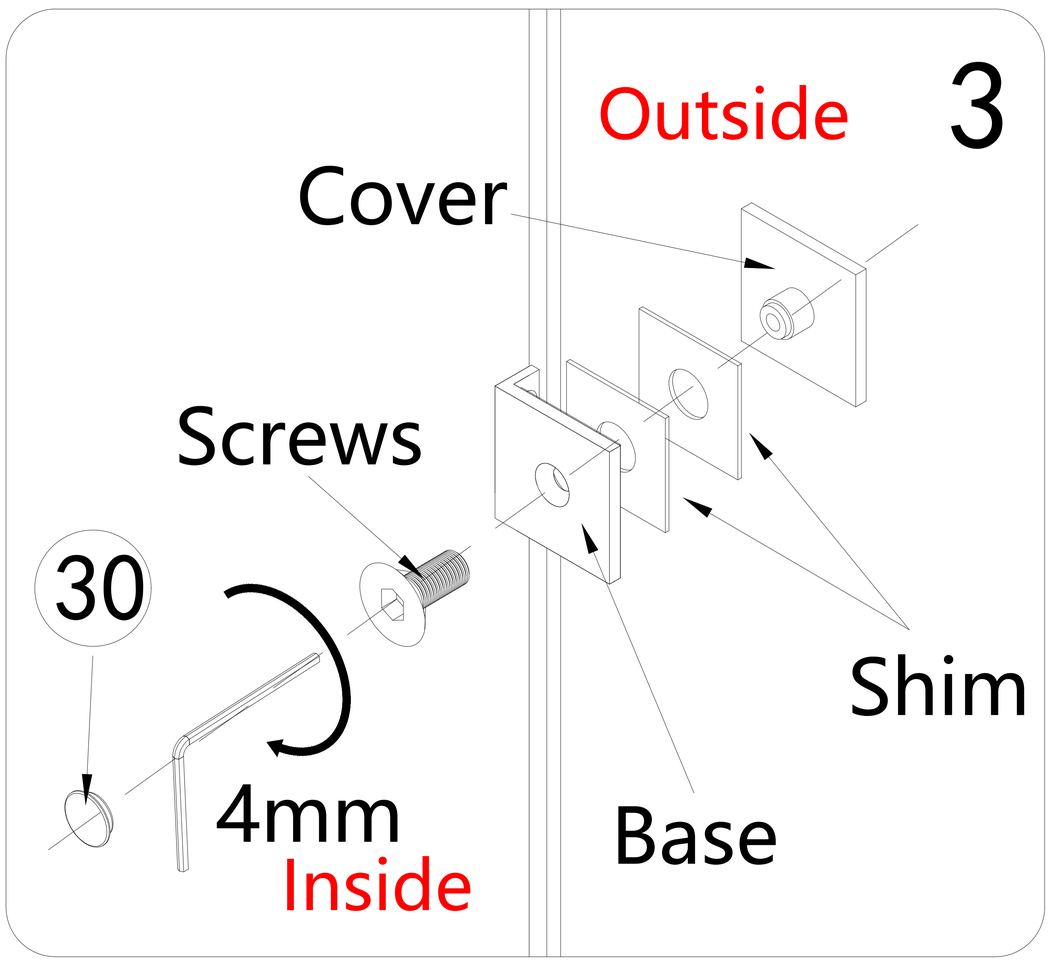

Note:The fixed glass is double-sided nano , can be freely installed.

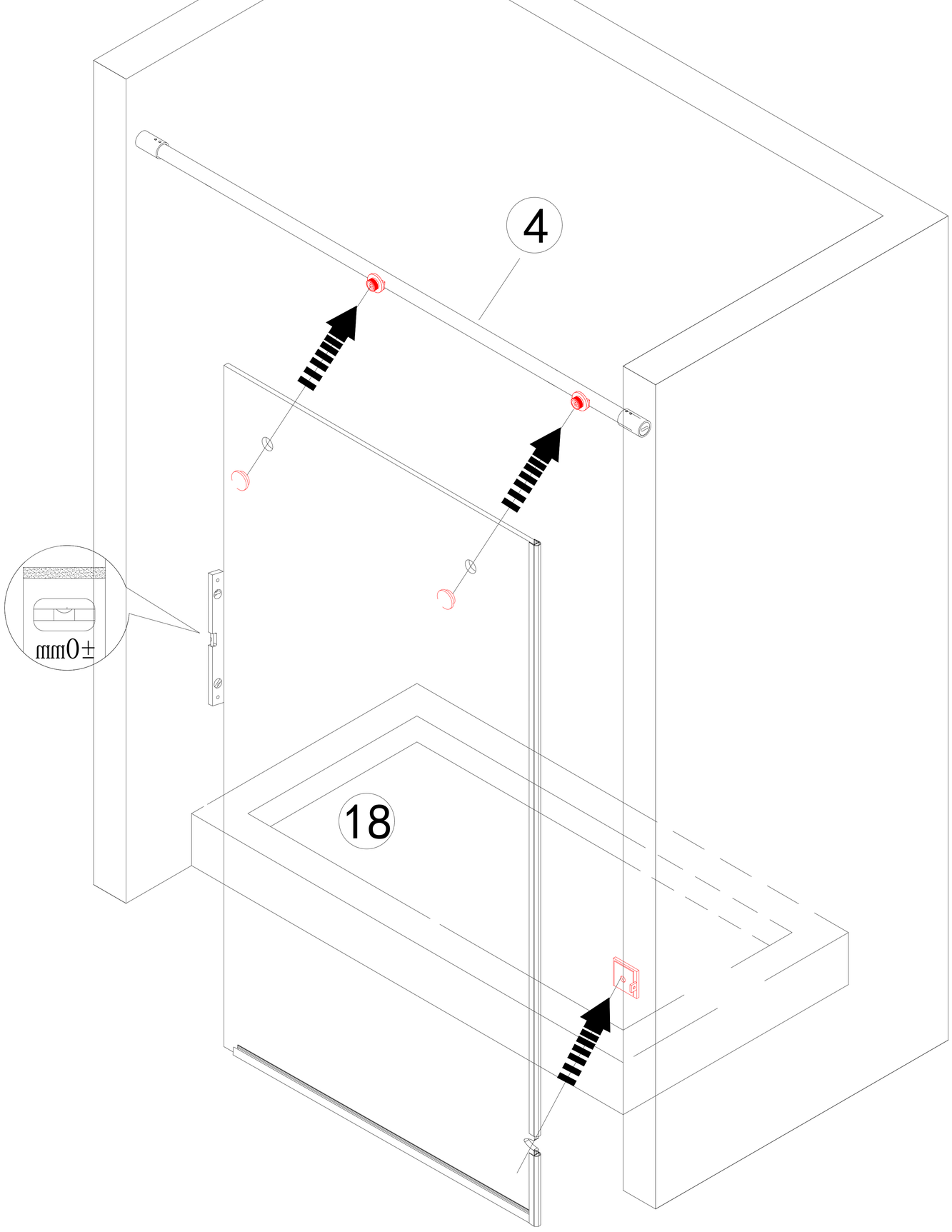

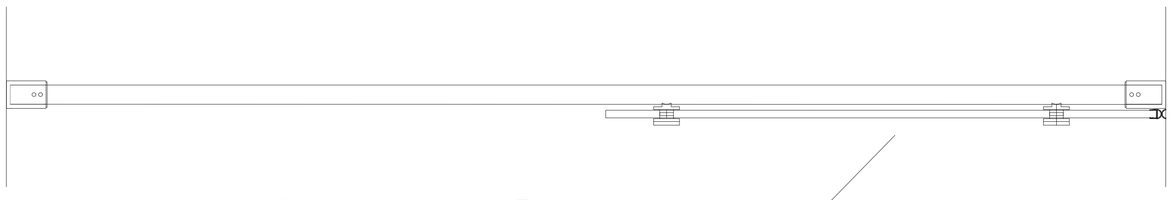

The Fixed glass is installed on the outside of the shower room

STEP 6-22

(Right Hand Assembly)

Install the sliding block 16

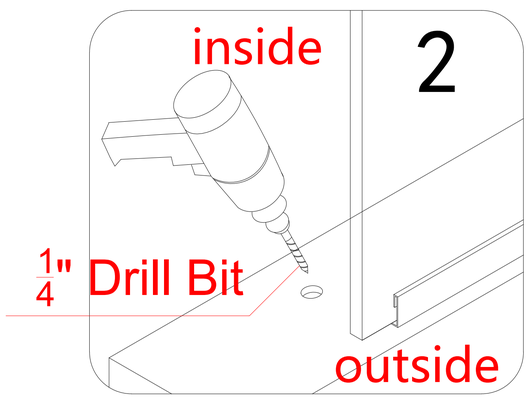

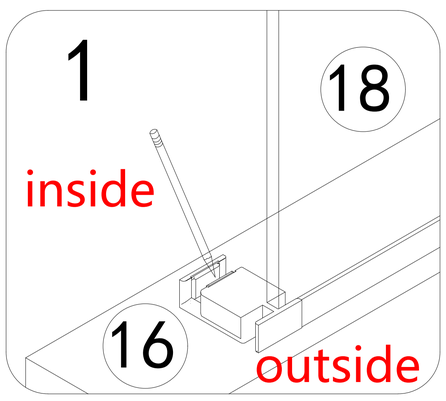

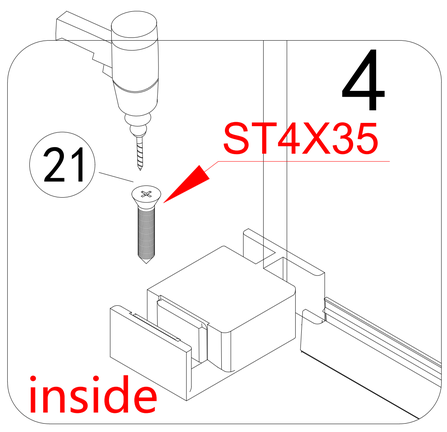

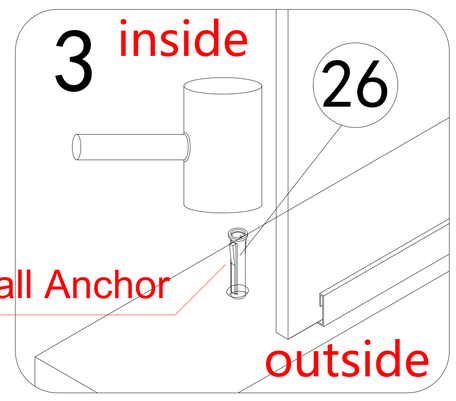

1.Insert the sliding block 16 under the Fixed Panel 18 side and mark it.
2 .Drill ∅ 1/4"(6.4mm) holes.
3. Inject Ø6 Wall Anchor 26 into the hole;
4. Secure the sliding block 16 with ST4X35 screws 21 .

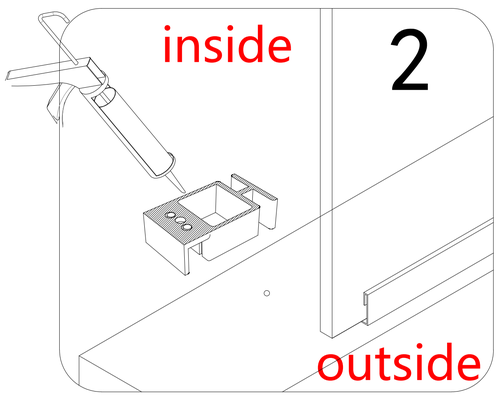

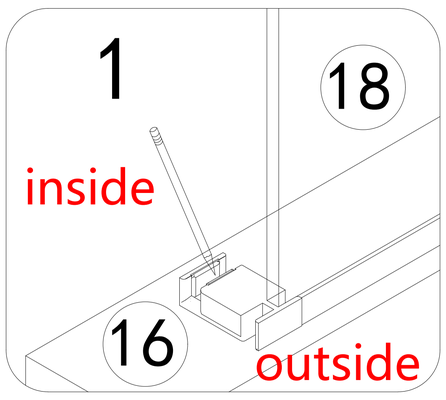

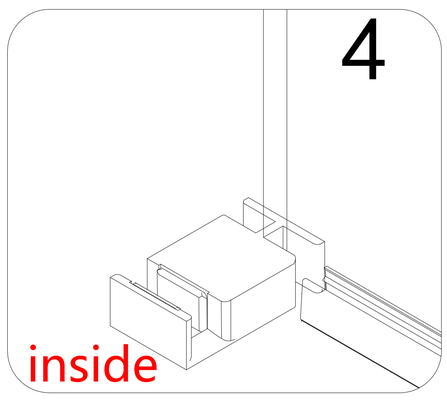

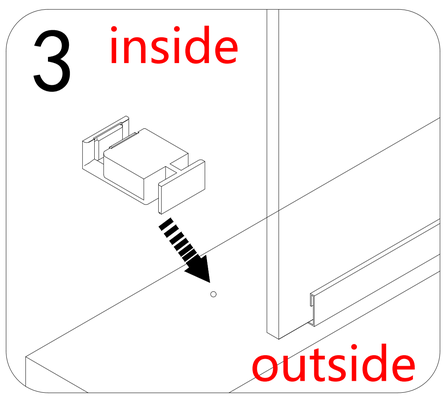

1.This method is applicable for environments when cannot be drilled.
2.Insert the sliding block 16 under the Fixed Panel 18 side and mark it.
3 . As shown in 2, the bottom of the sliding block 16 coated with glass glue for fixation.
4 . As shown in 3, Align the hole at the bottom of the slider with the marked hole and press down.

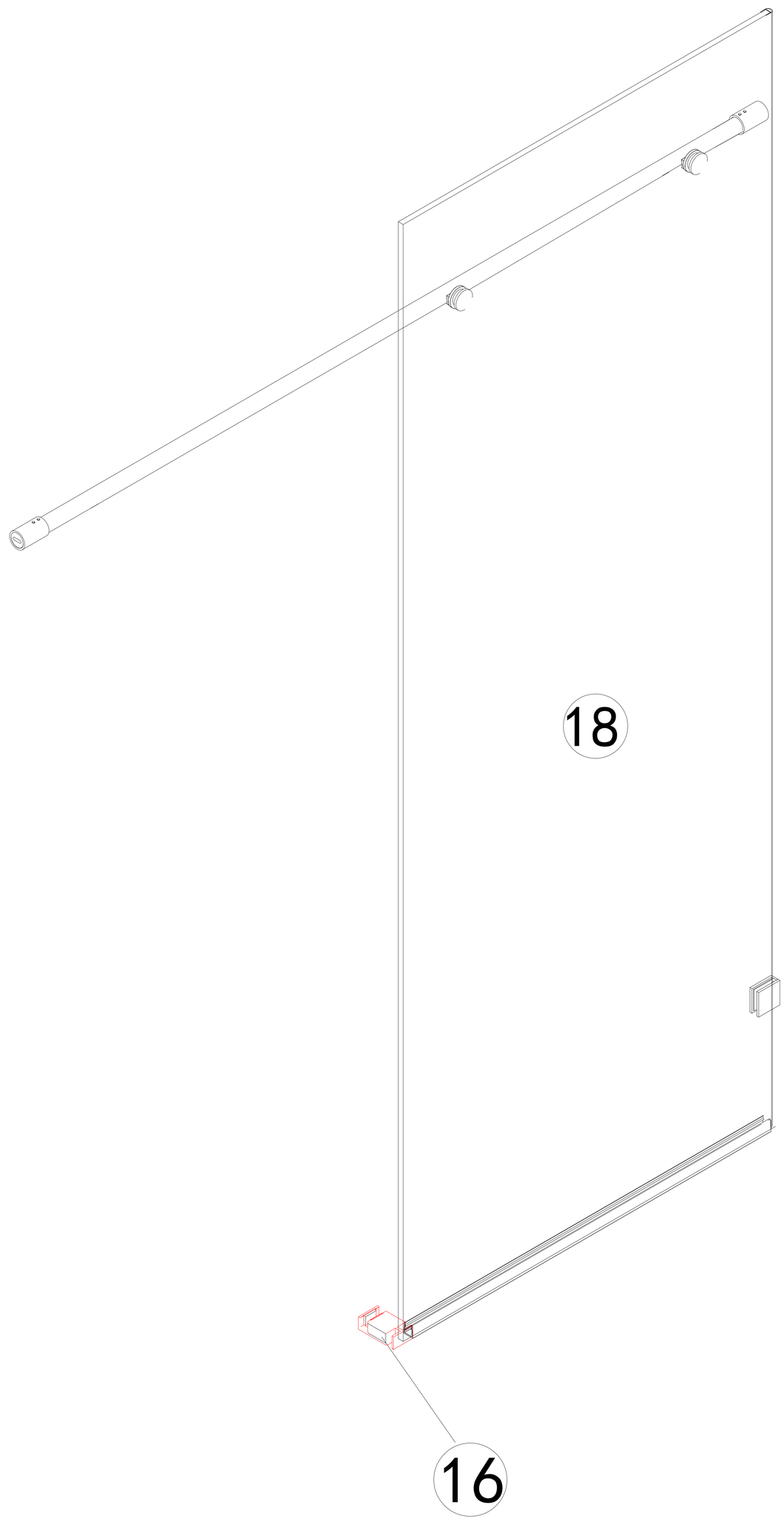

STEP 6-23

(Right Hand Assembly)

Install the Base Bar 15 and wall decoration cover 13

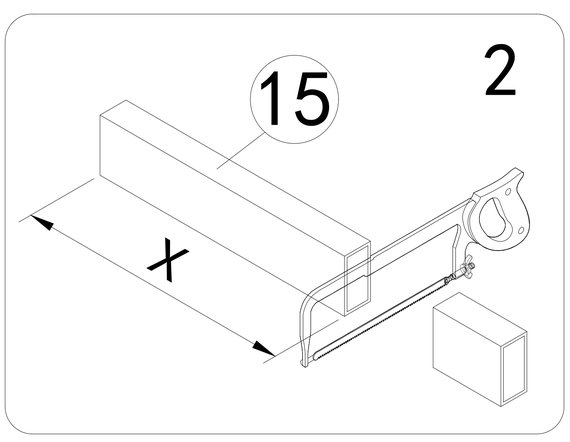

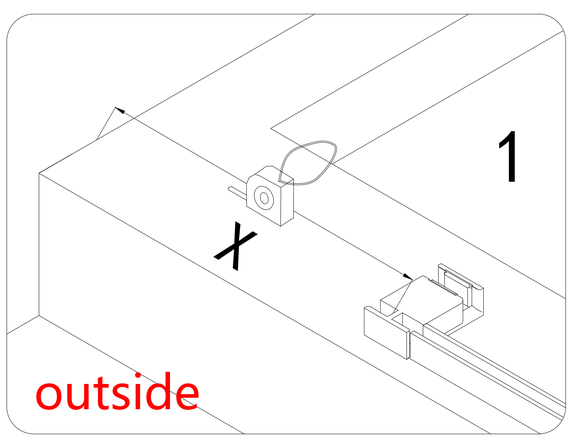

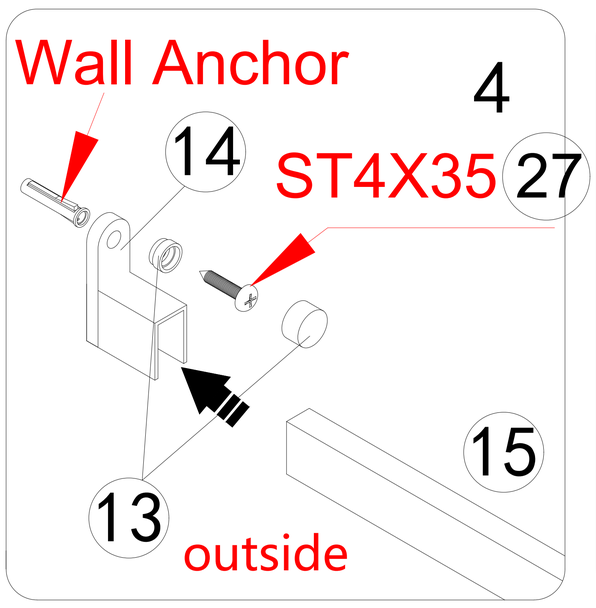

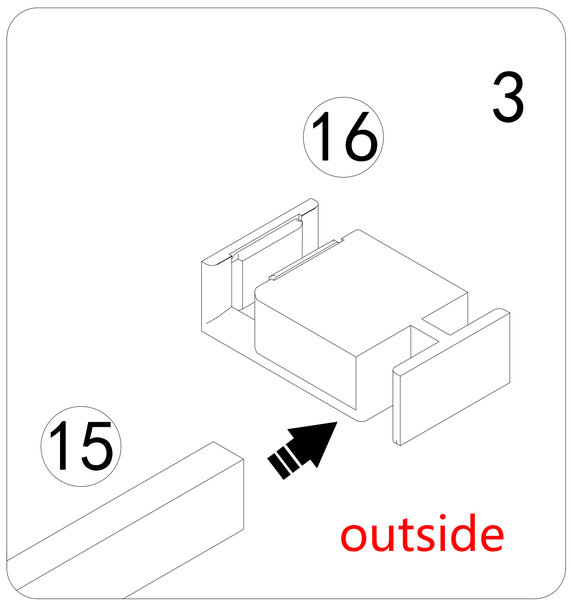

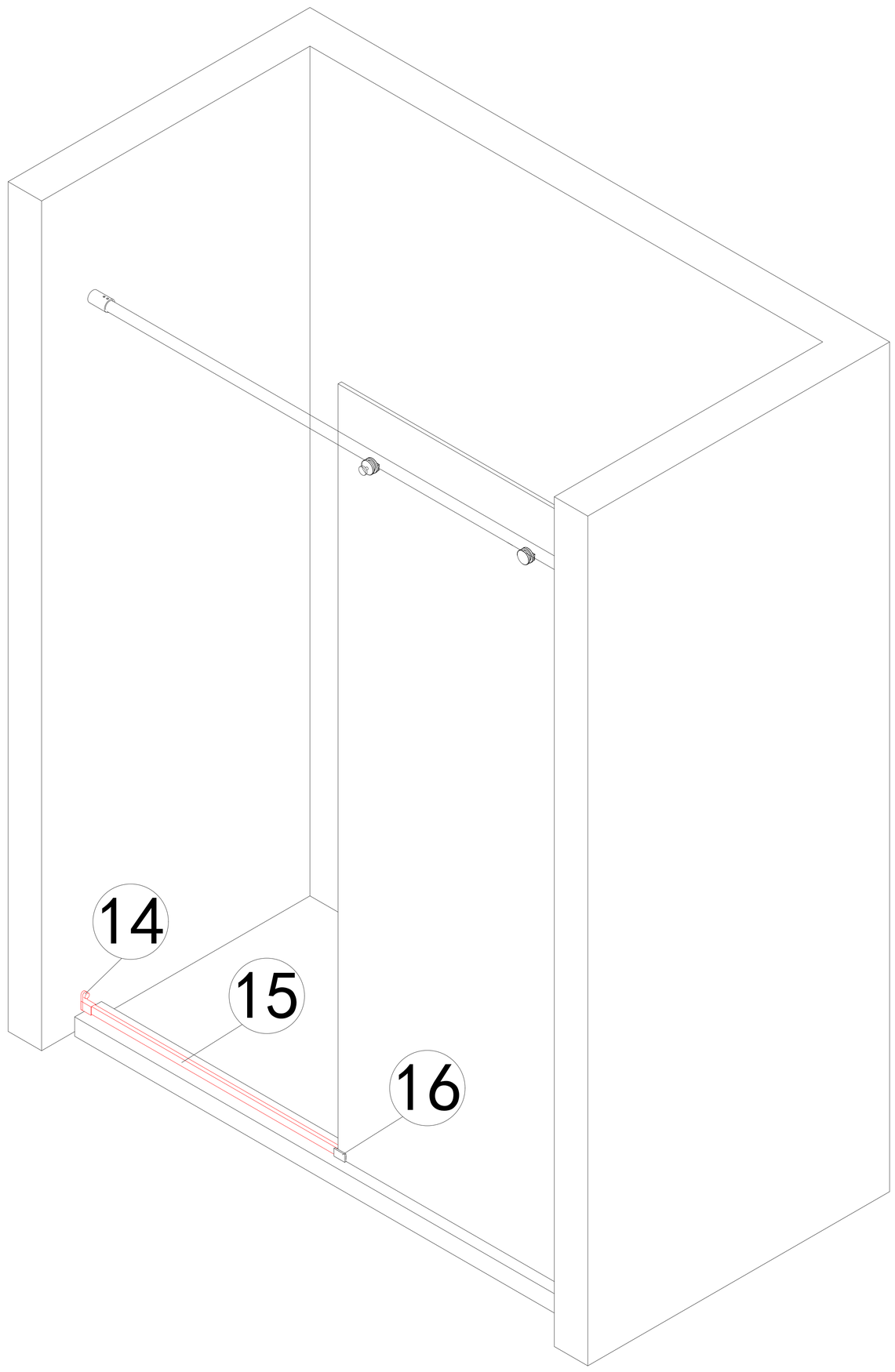

1.Measure the distance from the slot of the Sliding block 16 to the wall surface
2.Cut the Base bar 15 to fit if needed.
3.Insert one end of the Base bar 15 into the gap of Sliding block 16 .
4.Insert the other end into the Bottom Rail Wall Connecting Part 14 ,use 4*35 screw 27 ,fixed to the wall with wall decoration cover 13 .

STEP 6-24

(Right Hand Assembly)

Install the sliding panel 10

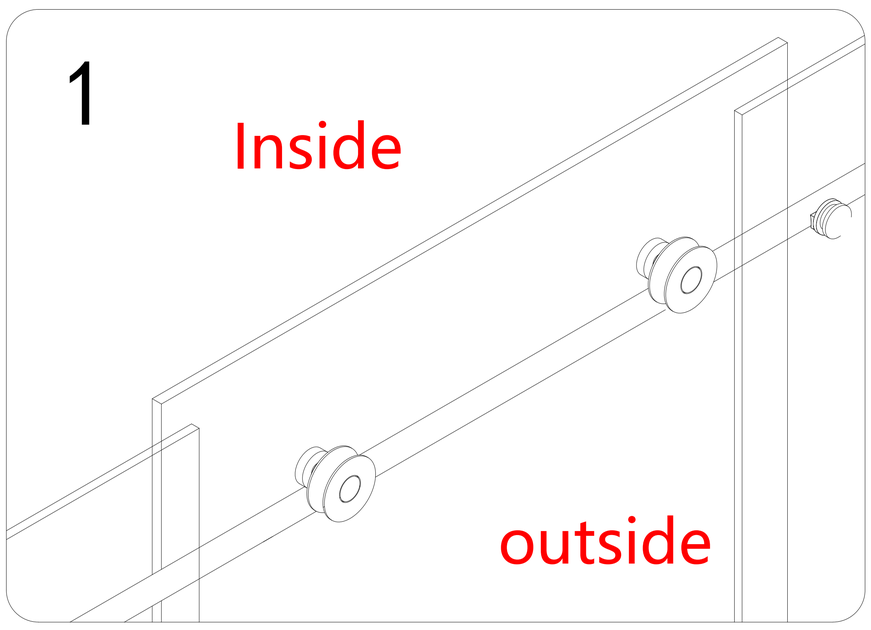

1.Hang the sliding panel (10) on the top rail (4) .

2.Make sure the bottom of the sliding panel (10) loaded into the sliding block (16) .

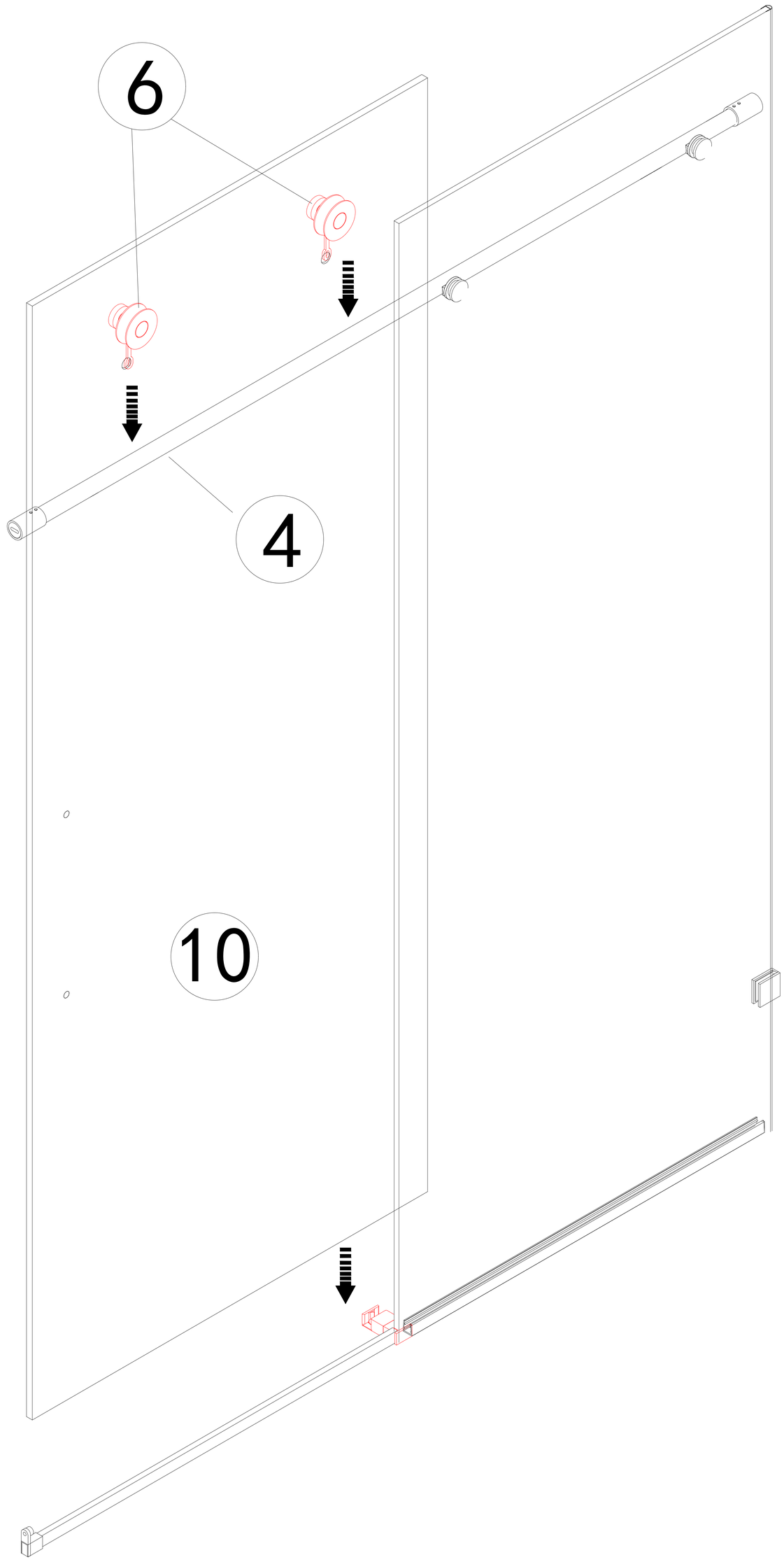

STEP 6-25

(Right Hand Assembly)

Install the Anti-Jumper (8) on the sliding panel (10)

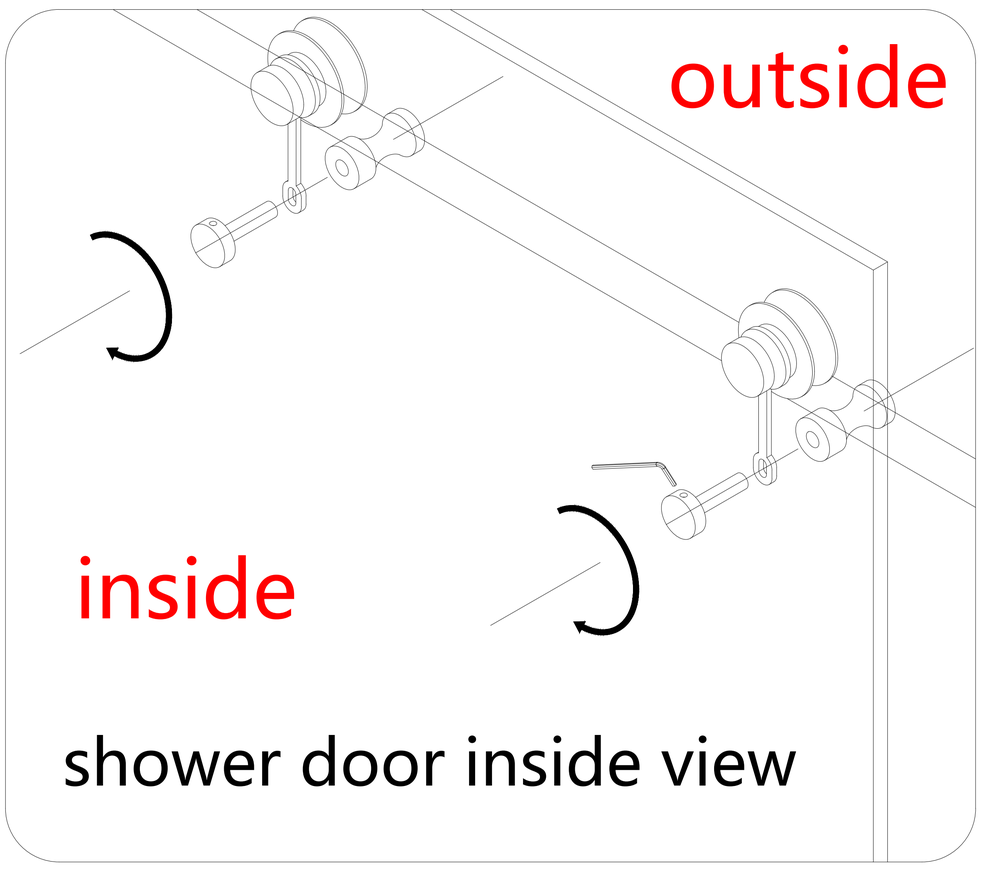

shower door inside view

1.Install the Anti-Jumper (8) outside the sliding panel (10) .
2.Use 2.5mm Allen wrench to tight inside.

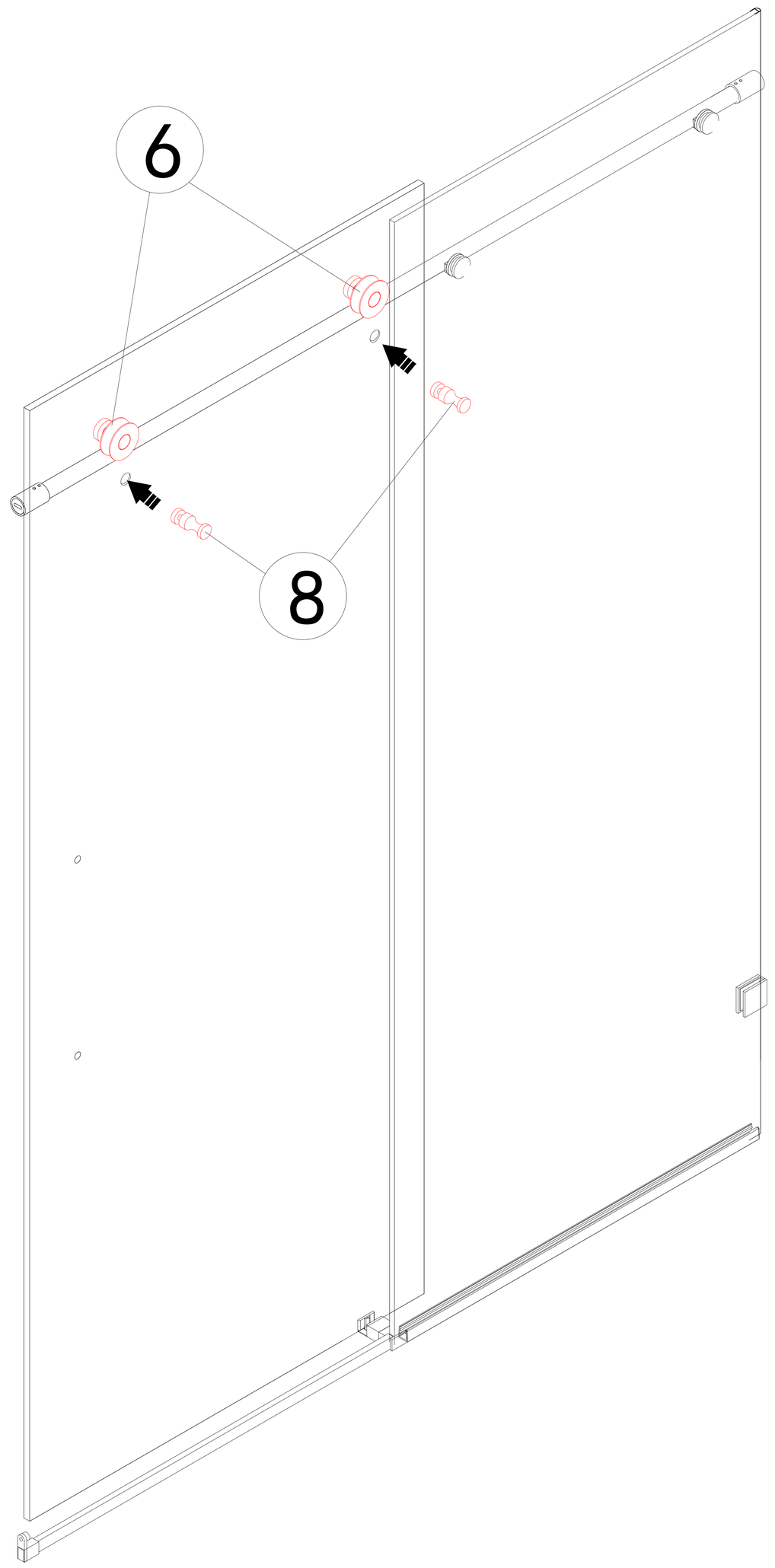

STEP 6-26

(Right Hand Assembly)

Adjust the height of the sliding panel (10) to ensure it is parallel to the wall surface

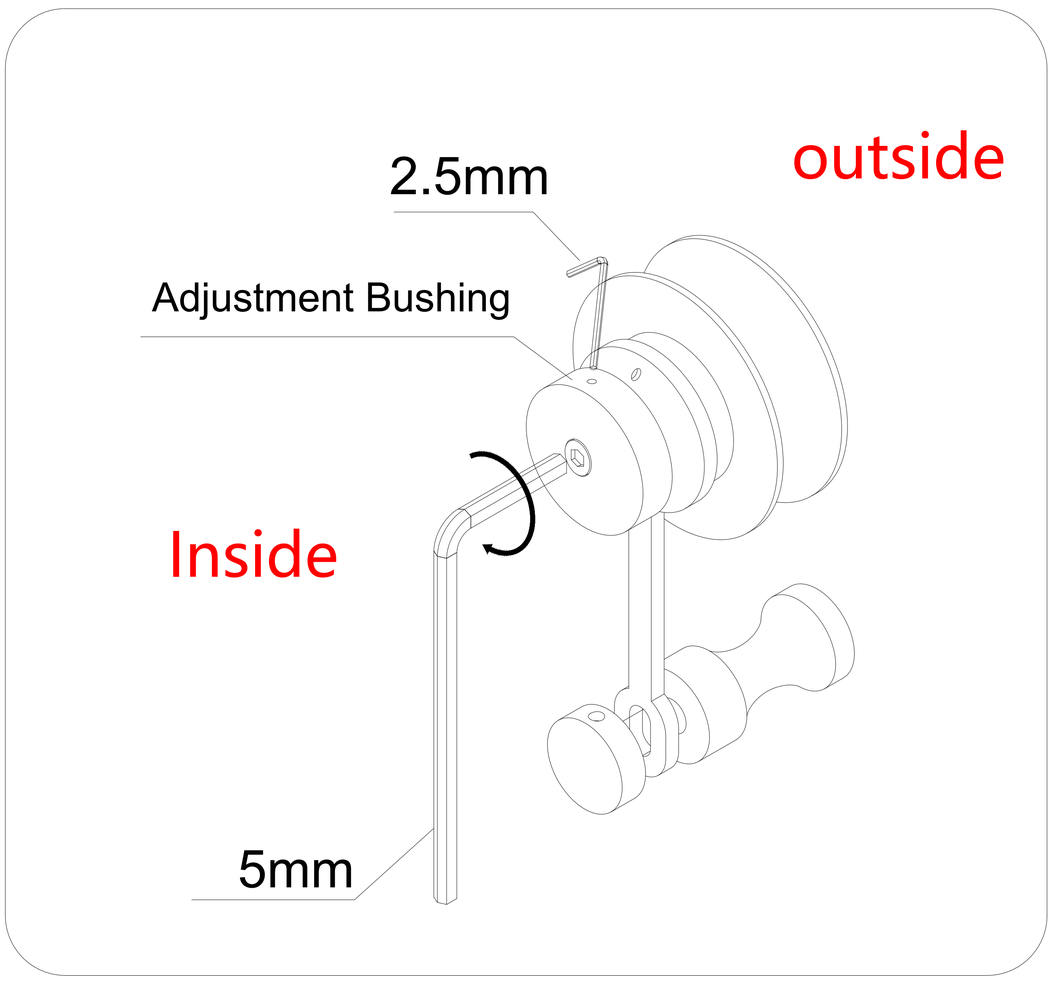

1.Use 2.5mm Allen key to rotate the eccentric shaft of the roller, adjust the height of the sliding panel.
2.Use 5mm Allen key to tight the roller.

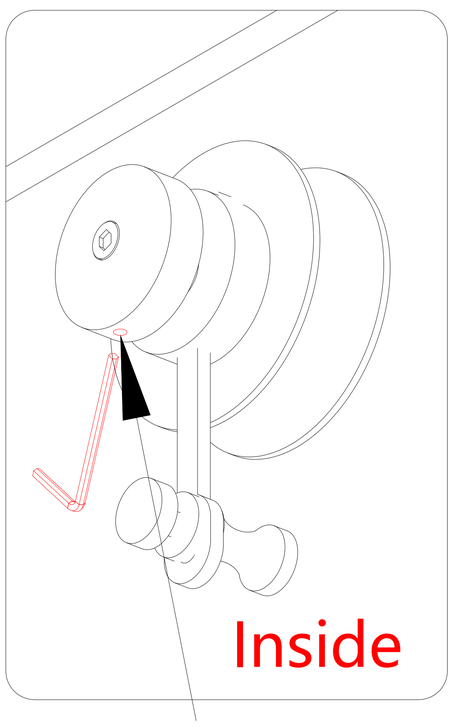

When the position of the small hole is facing upwards, the height of the sliding panel (10) is the lowest

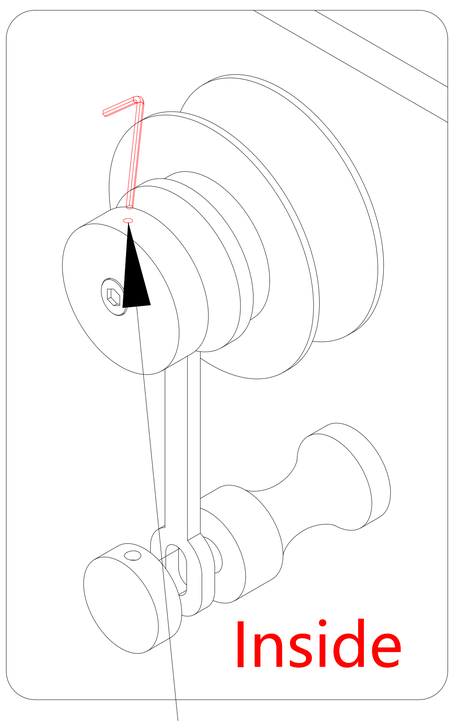

When the position of the small hole is facing downwards, the height of the sliding panel (10) is the highest

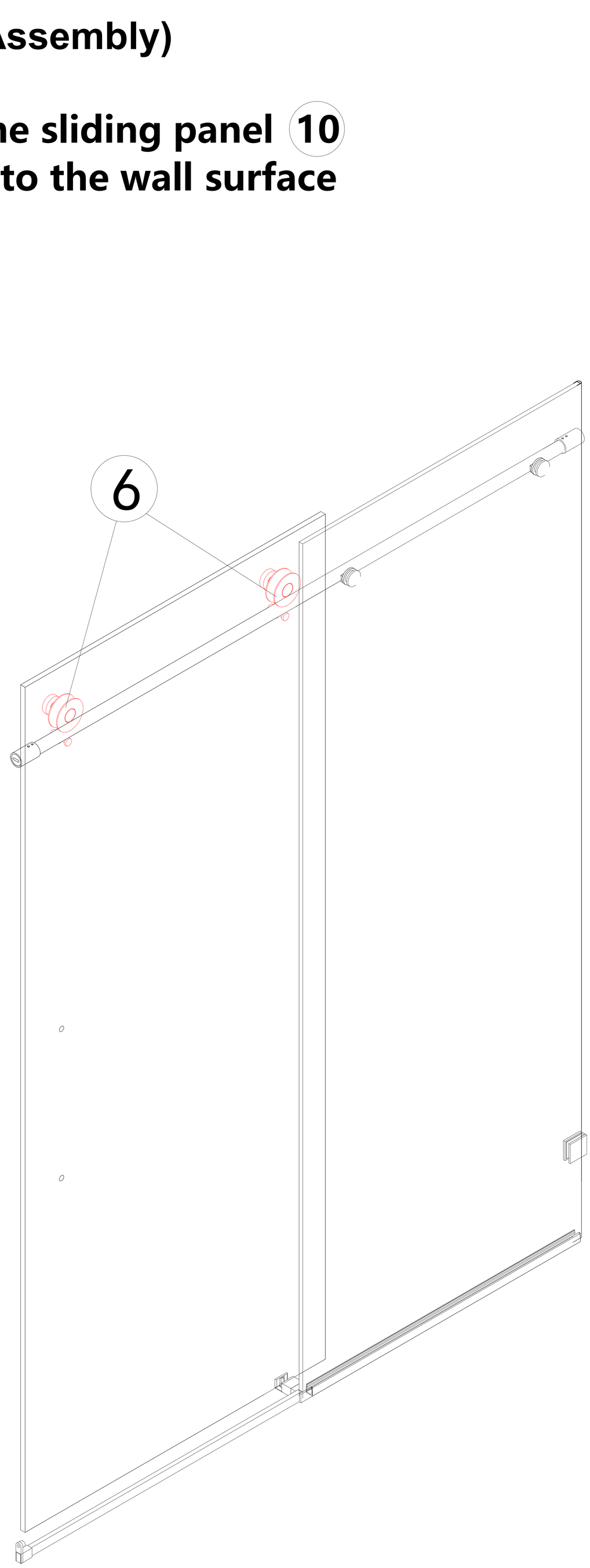

STEP 6-27

(Right Hand Assembly)

Install the Bumper Strip ⑨ and F-form waterproof strip ⑪ .

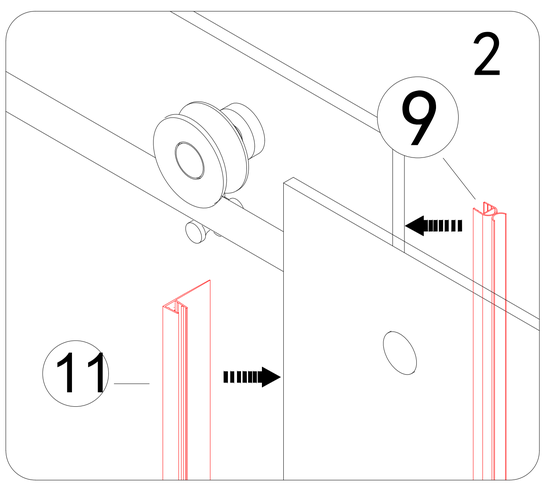

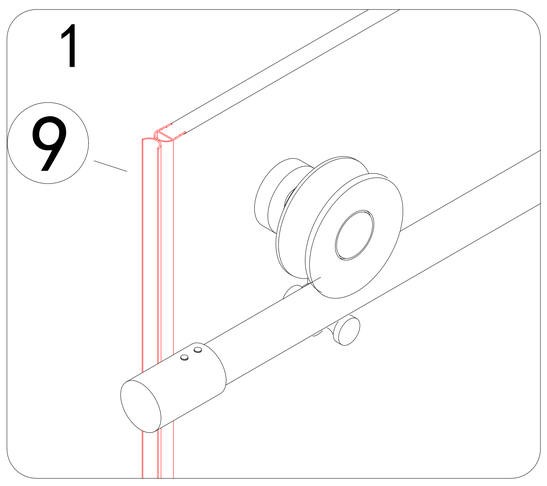

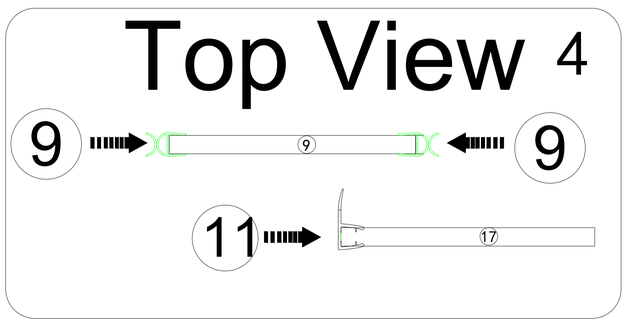

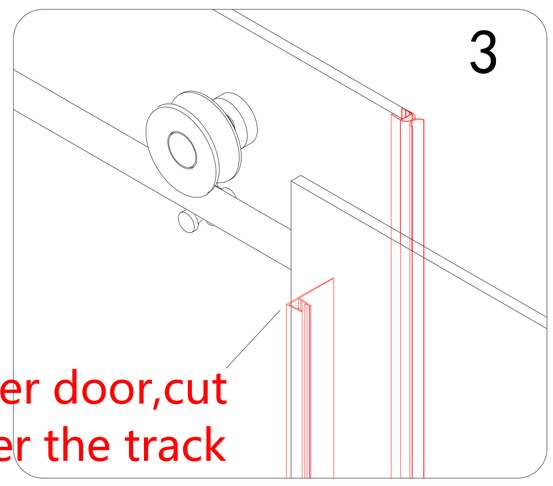

After installing the shower door,cut the waterproof strip under the track

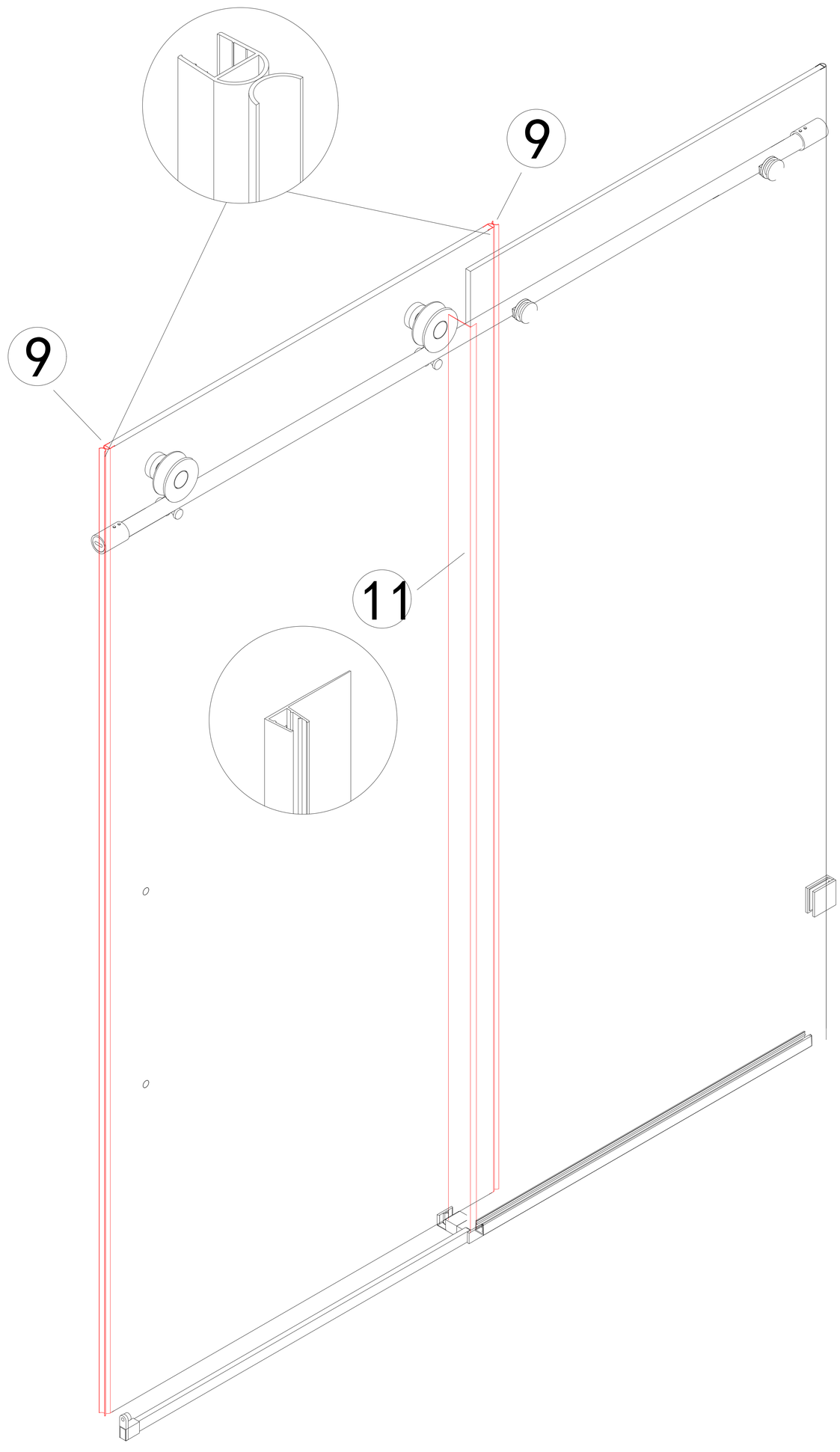

STEP 6-28

(Right Hand Assembly)

Install the Handle 12 .

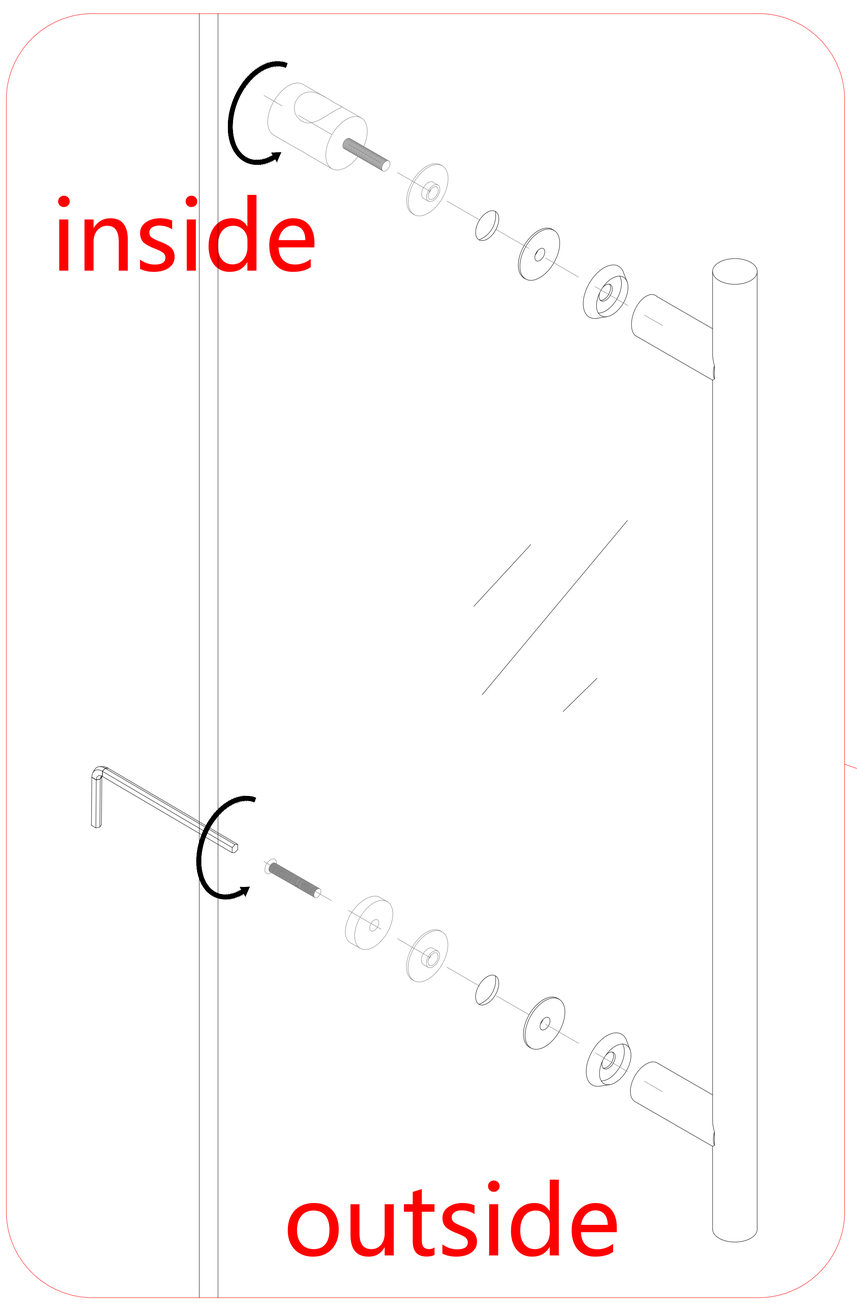

Use 2.5mm Allen wrench to tight.

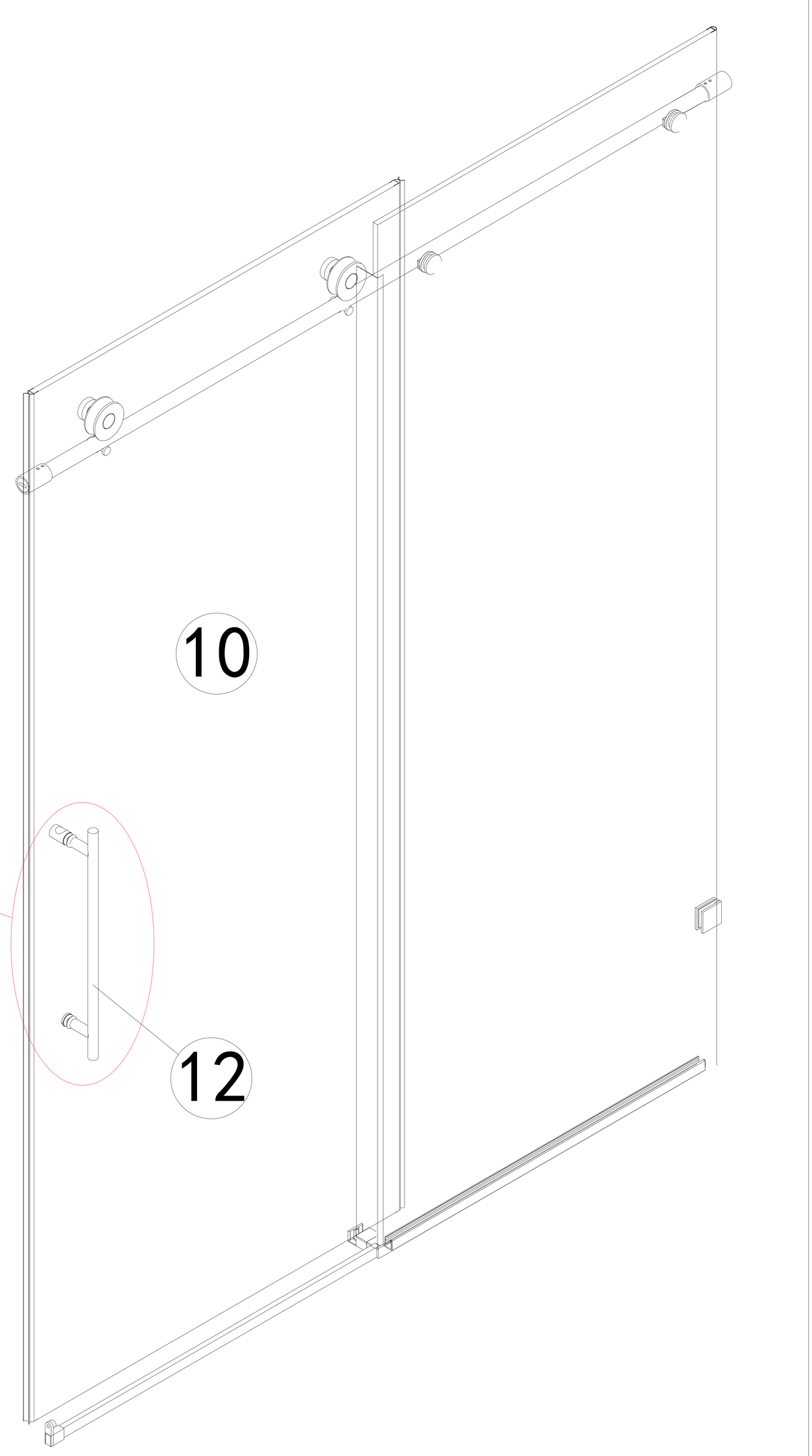

STEP 7

If the buffer clamp (28) of the Soft Closing Mechanism (5) is found to be damaged during subsequent use, please follow the steps below to replace it with the parts

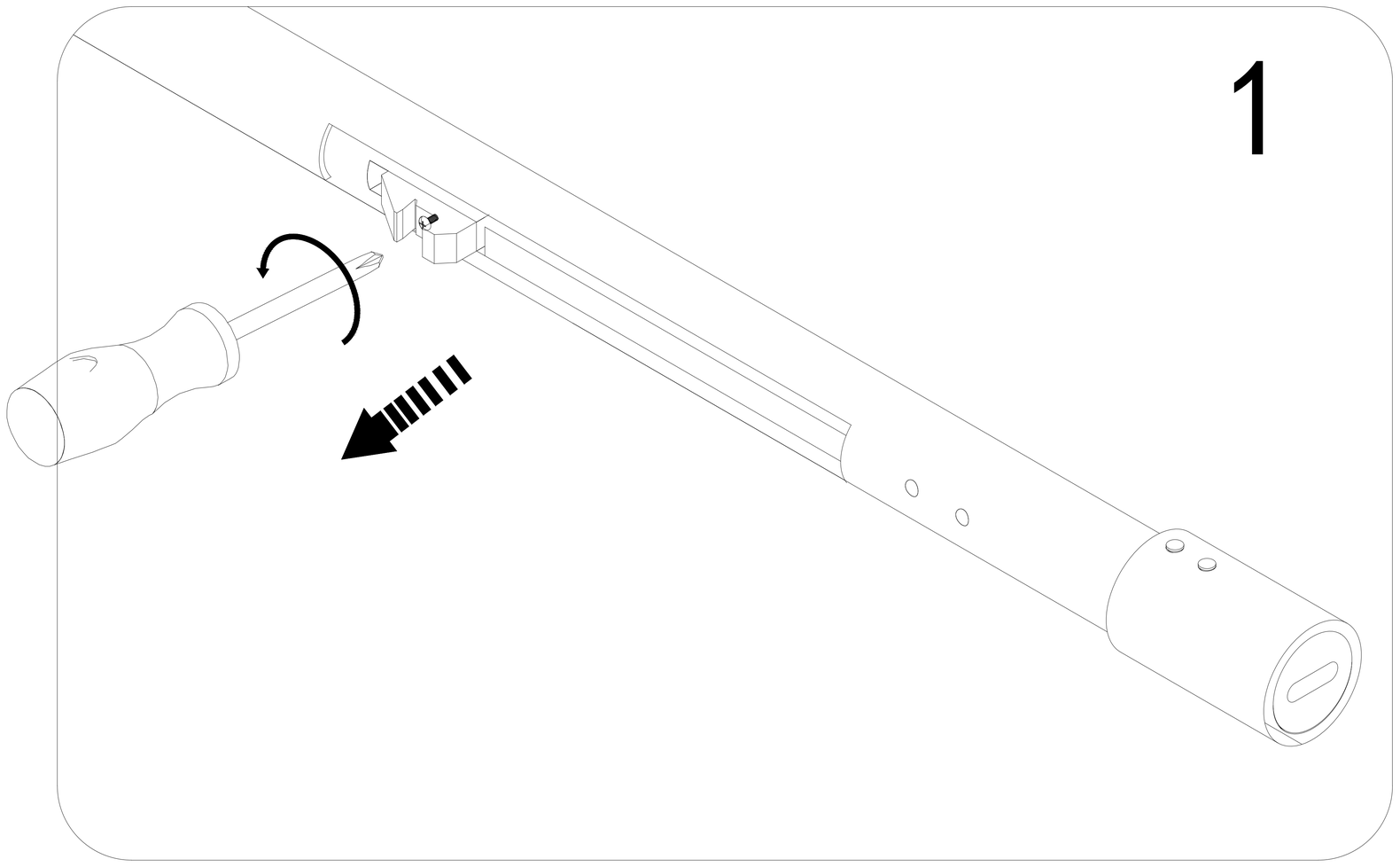

1. Unscrew the fixing screws and remove the old buffer clamp

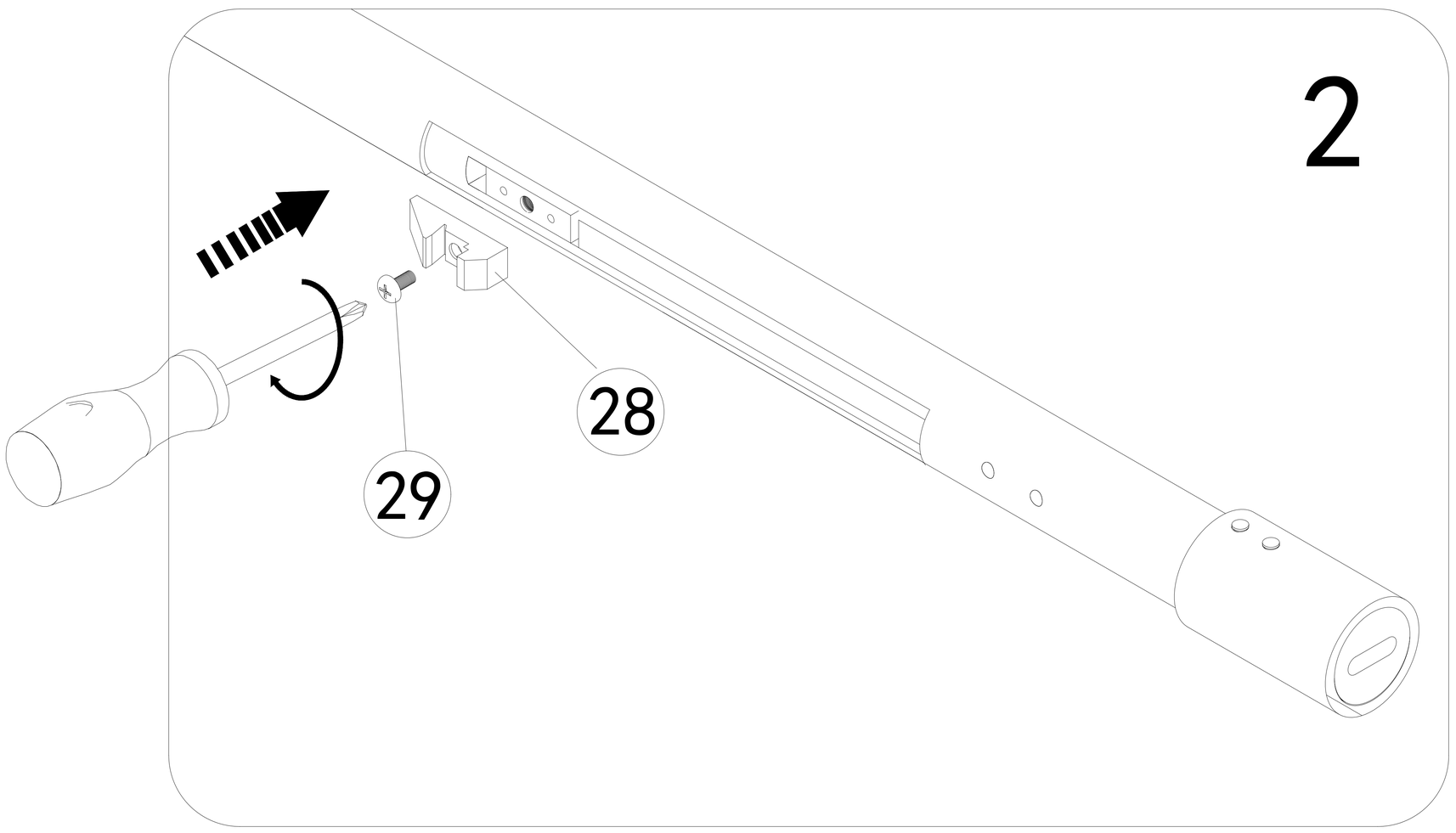

2. Use the removed fixing screws or 3X7 screws (29) from the spare parts to install the new buffer clamp (28)

SEALING

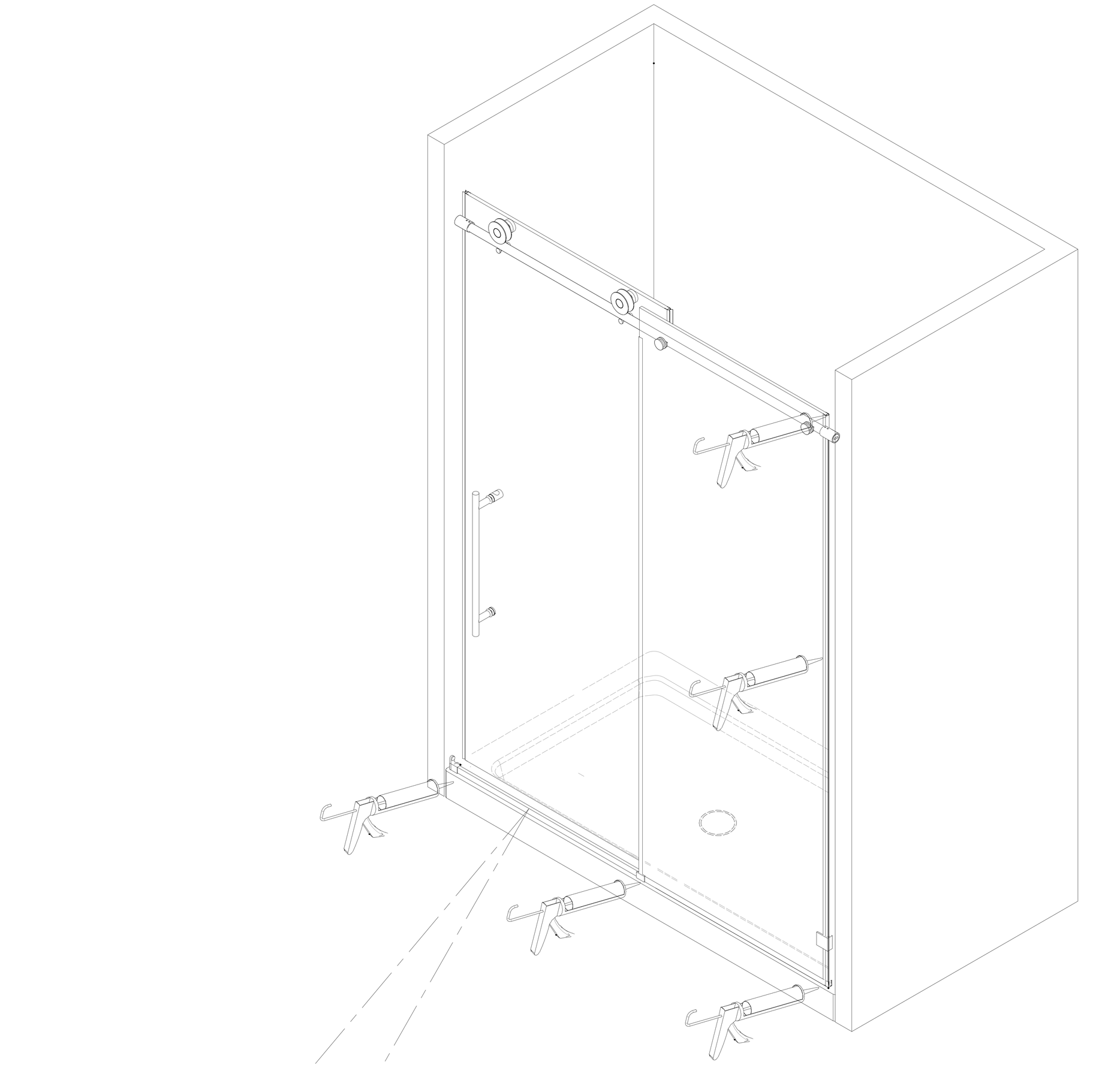

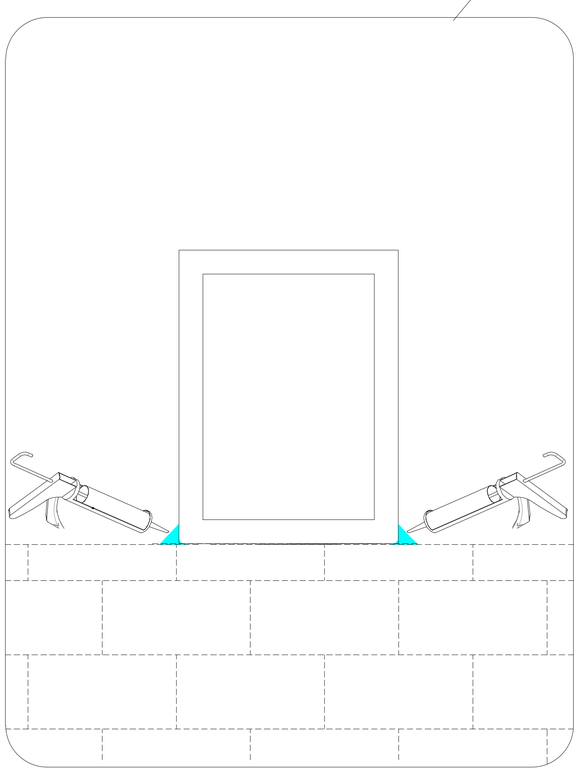

Apply glass glue on both sides of the bottom rail

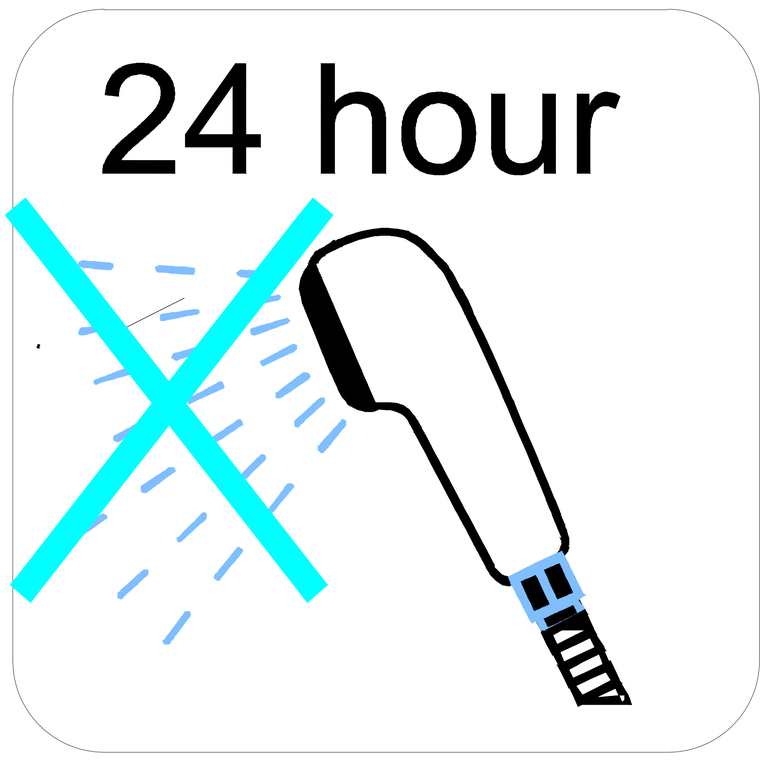

Wait for the glass glue to dry for 24 hours before using the shower door