Installation Instruction

Part List and Hardware List

PIECE	PICTURE	DESCRIPTION	QUANTITY
A		Hanging plate	1X
B		Self -tapping screw	2X
C		Wall plate	1X
D		M4 Nut	2X
E	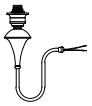	Lamp arm	2X
F		Glass lampshade	2X
G		sleeve	1X

PIECE	PICTURE	DESCRIPTION	QUANTITY
O		Wire connector	3X
P	black	wire	1X
Q	white	wire	1X
R	Earth wire	Earth wire	1X

1

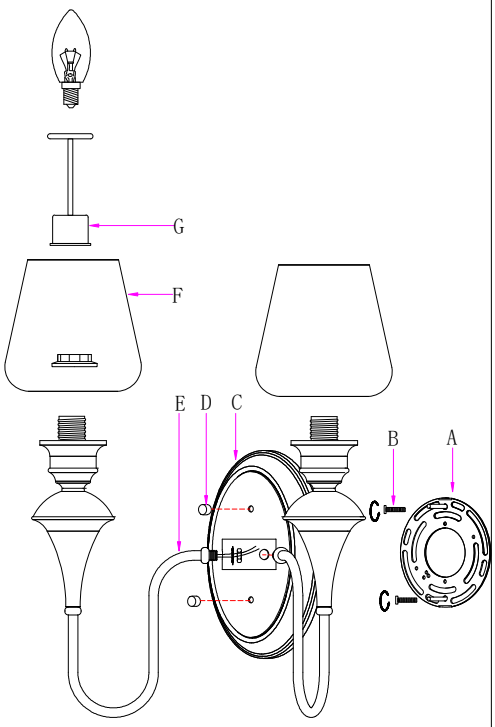

2

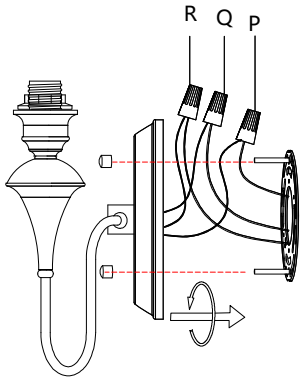

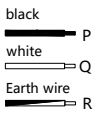

Step 2

1、Connect the power wire of lamp body to the reserved Power cable, pay attention to the positive and negative poless

2.After connecting the wires properly, use M4 screw (D) to fix the lamp body on the Wall plate.

3

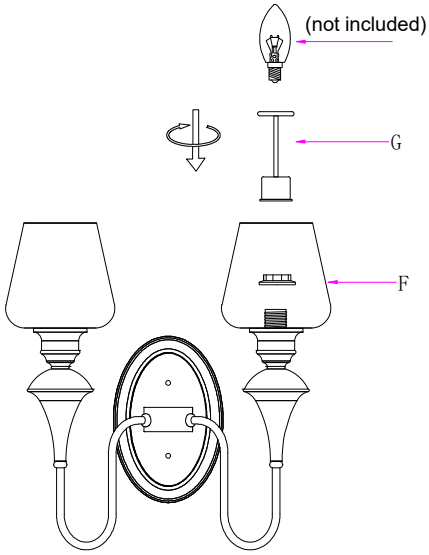

Step 3:

1.Finally, install the E12 light bulb (not included) and glass lampshade(F) toc omplete the installation.

Step 1:

1.Fix the hanging plate (A) into the On the wall with self-tapping screws (B).

2.Then, connect the Lamp arm(E), and the Wall plate(C).

Safety Information: 1) POWER OFF at the circuit breaker before installation or maintenance. 2) INSPECT all parts. Do NOT install and contact us via Message if any are missing or damaged.