ASSEMBLY INSTRUCTION

DESCRIPTION: TWIN DAY BED HB & FB
DAYBED SIDE RAILS
DAYBED UPH BACK
TWIN DAYBED SLAT ROLL
TWIN TRUNDLE UNIT

Thank you for purchasing this quality product. Be sure to check all packing material carefully for small parts which may have come loose inside the carton during shipment. Identify and count all parts and compare with the parts List Below:

PART LIST:

①	②	③	④	⑤
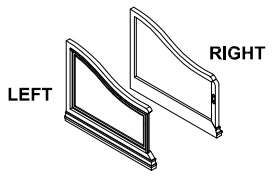	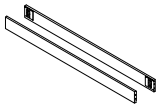	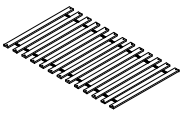	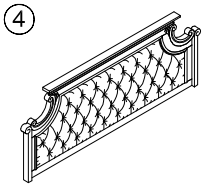	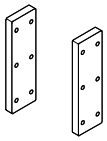
HEADBOARD - FOODBOARD: 2PCS	**SIDE RAIL : 2PCS**	**SLATS ROLL: 1SET**	**UPH BACK: 1PC**	**WOOD SUPPORTS: 2PCS**

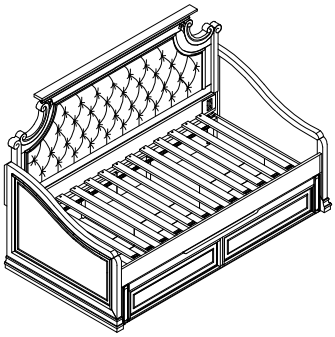

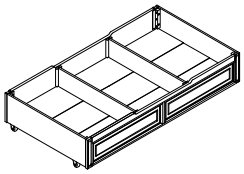

TWIN TRUNDLE UNIT

⑥

HARDWARE LIST

NO.	Drawing	Description	Q'ty
A		Threaded Bolt Ø5/16" X3-1/2"	8pcs
B		Bolt Φ5/16"x 1-3/4"	12pcs
C		Flat washer (Ø5/16"x19mm)	20pcs
D		Spring washer (Ø5/16")	20pcs
E		Hex Nut (Ø5/16")	8pc
F		Wood screw Ø8 x 1"	26pcs
G		Ø5/16" Wrench(12mm)	1pc
H		Allen wrench(5mm)	1cs

STEP 1

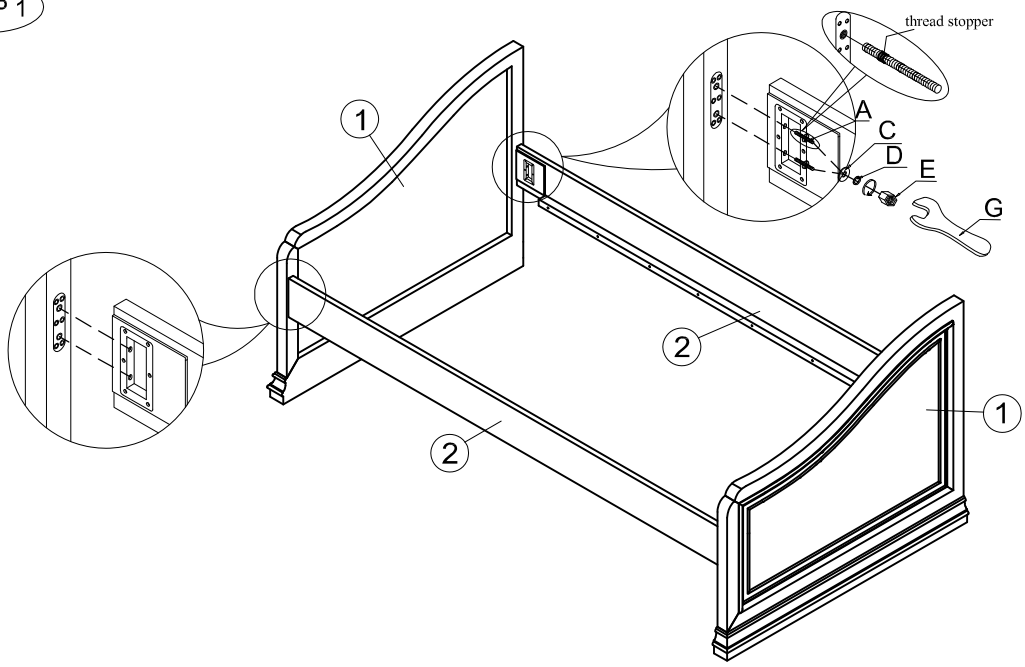

STEP 2

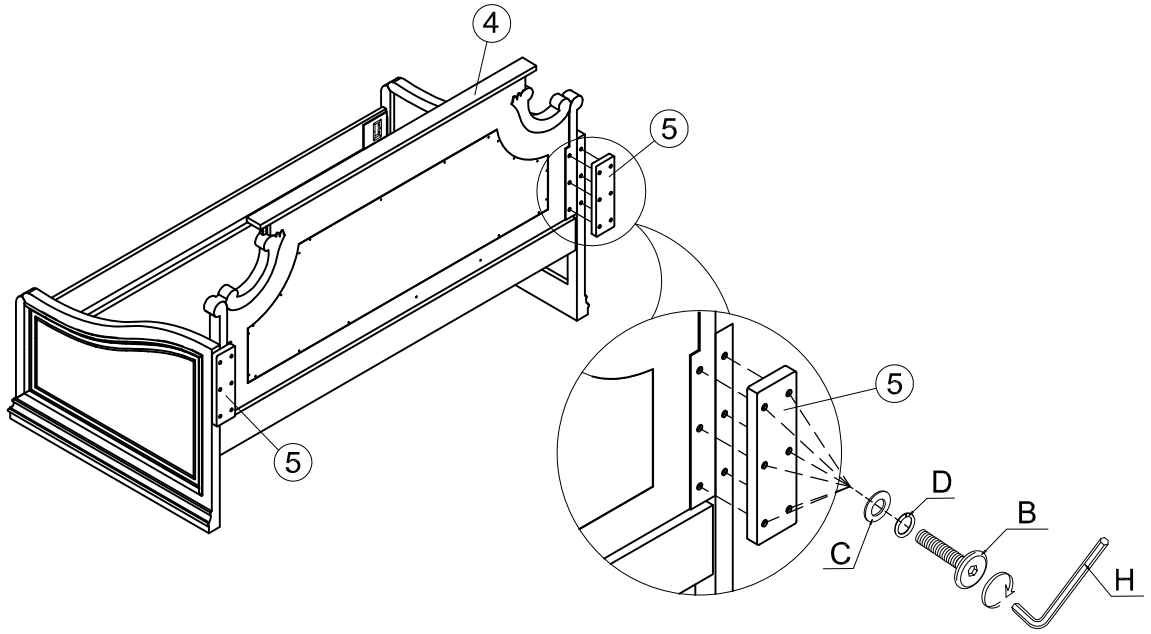

STEP 3

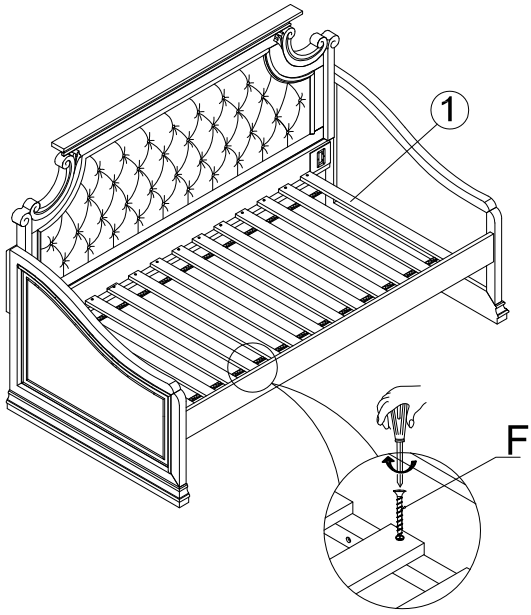

STEP 4

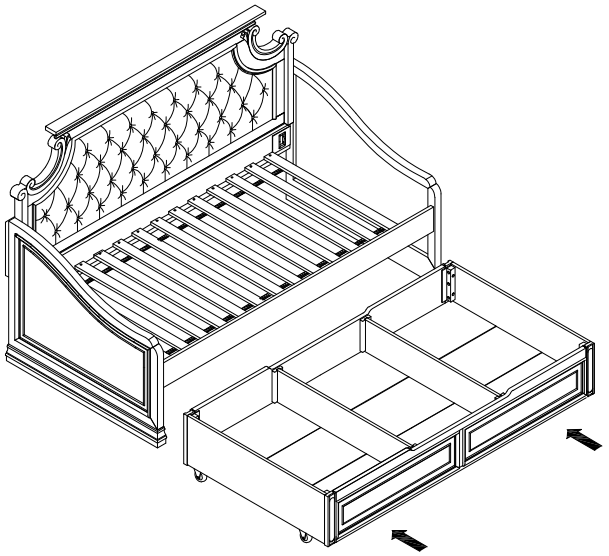

CLEANING INSTRUCTION

Clean the Day Bed surface with a furniture polish and a soft cloth.

Made in Viet Nam