INSTALLATION
Product Manual

Version: 460107US-00-25A-PF

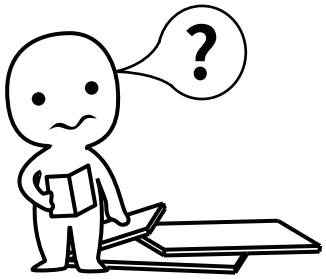

IMPORTANT INFORMATION!

please read the entire manual before starting to assemble and/or using this product.follow the manual thoroughly and keep it for further reference.

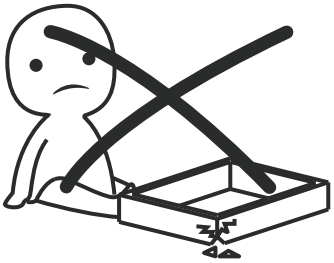

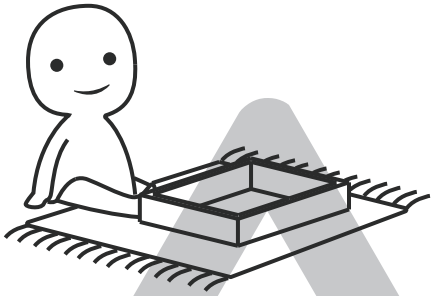

AVOID SCRATCHES!

In order to avoid scratching this furnuture should be assembled on a soft layer-could be a rug.

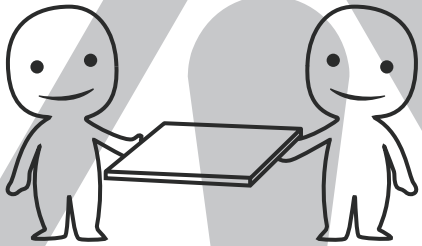

IMPROVE EFFICIENCY !

Try to find a partner to install with you, which can speed up the installation efficiency and shorten the time.

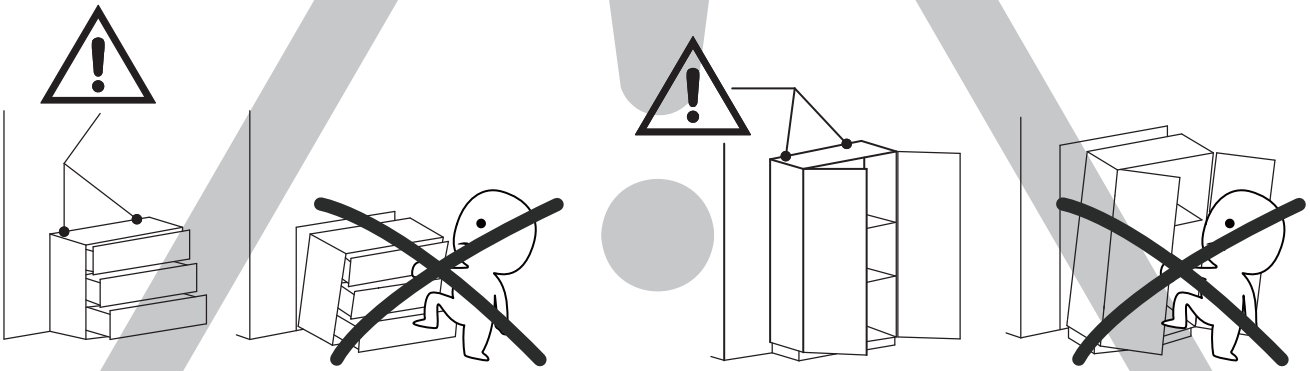

ANTI-TOPPLE WARNING !

Overturned furniture can cause serious or fatal crush injuries. To prevent tipping over, be sure to use the wall attachment, if not included with this product. Please purchase the wall attachment that fit your wall. If unsure, seek professional advice. Please read and follow each step of the instructions carefully.

IMPORTANT !

It is important that any product which is assembled using any kind of screw is re-tightened 2 weeks after assembly,and once every 3 months - in order to assure stability through-out the lifespan of the product.

For regular maintenance and cleaning of the product, for the frame, please use a rag dipped in neutral detergent to fully wipe it, and then dry it with a clean rag.For glass materials, wipe with a rag dampened with water glass cleaner, and then dry with a dry rag.

Do not use an electric screwdriver, and do not use too much force when installing, because the board is easy to break.

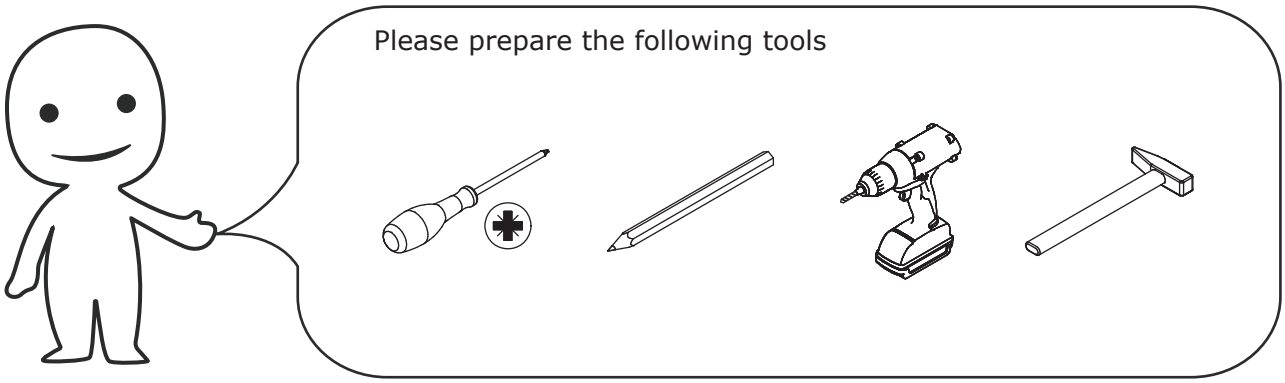

When installing, please carefully confirm whether each screw corresponds to the manual, accessories with similar shapes can be distinguished by size

A x 52	B x 52	C x 14	D x 28	E x 8
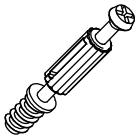				
M5 x 42 mm	∅15 x 10 mm	∅6 x 40 mm	3.5 x 12 mm	3.5 x 18 mm

F x 3	G x 18	H x 16	J x 6	K x 8
				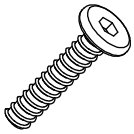
M4 x 18 mm	M5 x 40 mm	M6 x 10 mm	M6 x 20 mm	M6 x 28 mm

L x 3	M x 14	N x 2	P x 2	Q x 3
		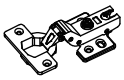		
M6	∅15 x 6 x 2 mm	∅35 mm		113

R x 4	x 1	x 1
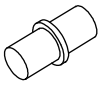	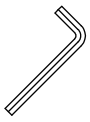	
∅6	#4	#10

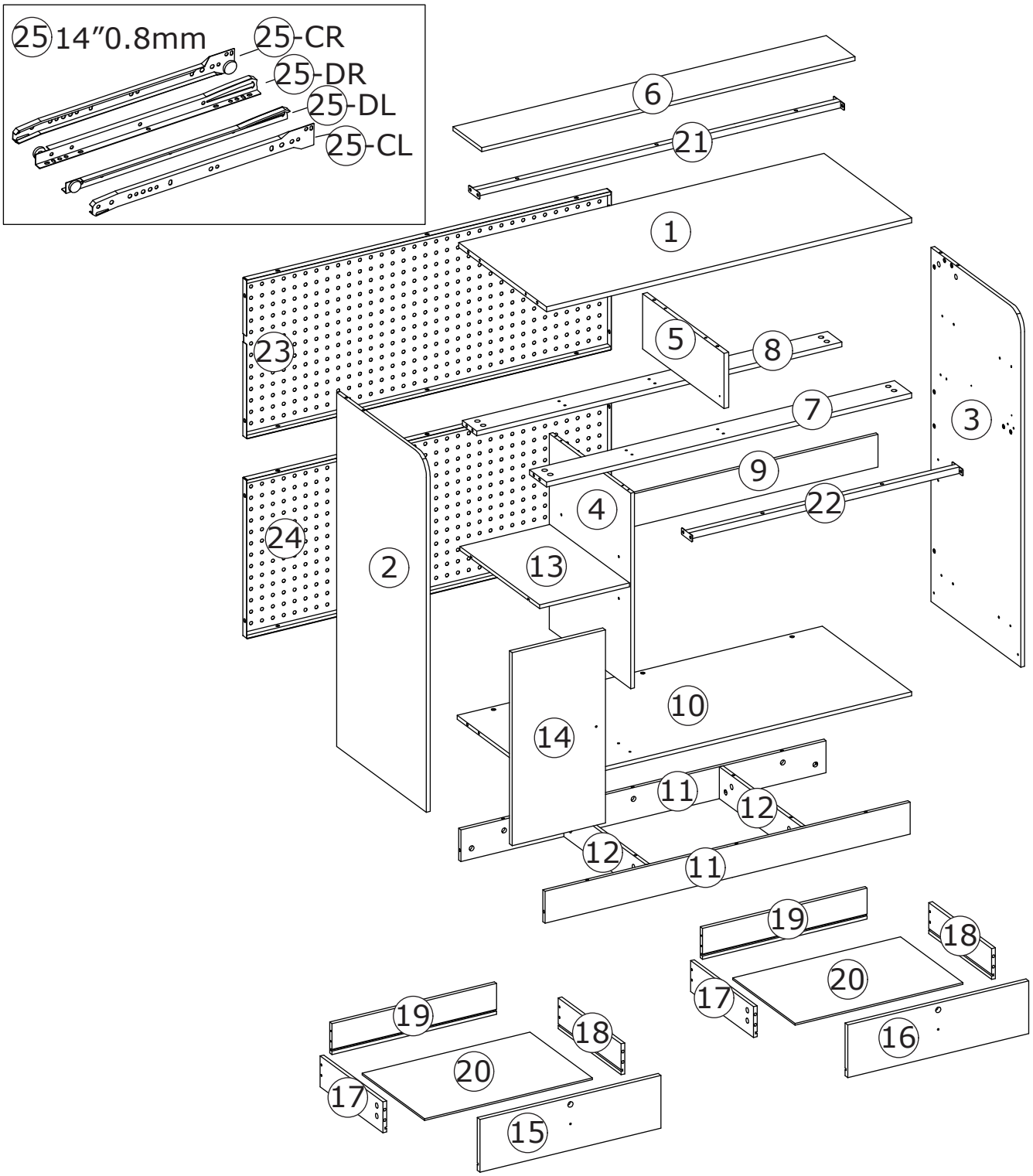

⚠WARNING

Children have died from furniture tipover.To reduce the risk of furniture tipover:

- ALWAYS install Anti-tip device provided.
- NEVER put a TV on this product.
- NEVER allow children to stand,climb or hang on drawers,doors,or shelves.
- NEVER open more than one drawer at a time.
- Place heaviest items in the lowest drawers.

This is a permanent label.
Do not remove!

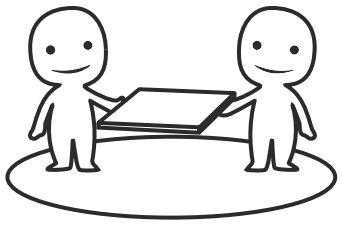

ASSEMBLED BY 2 ADULTS

1

A x 22	D x 4	
M5 x 42 mm	M3.5 x 12 mm	

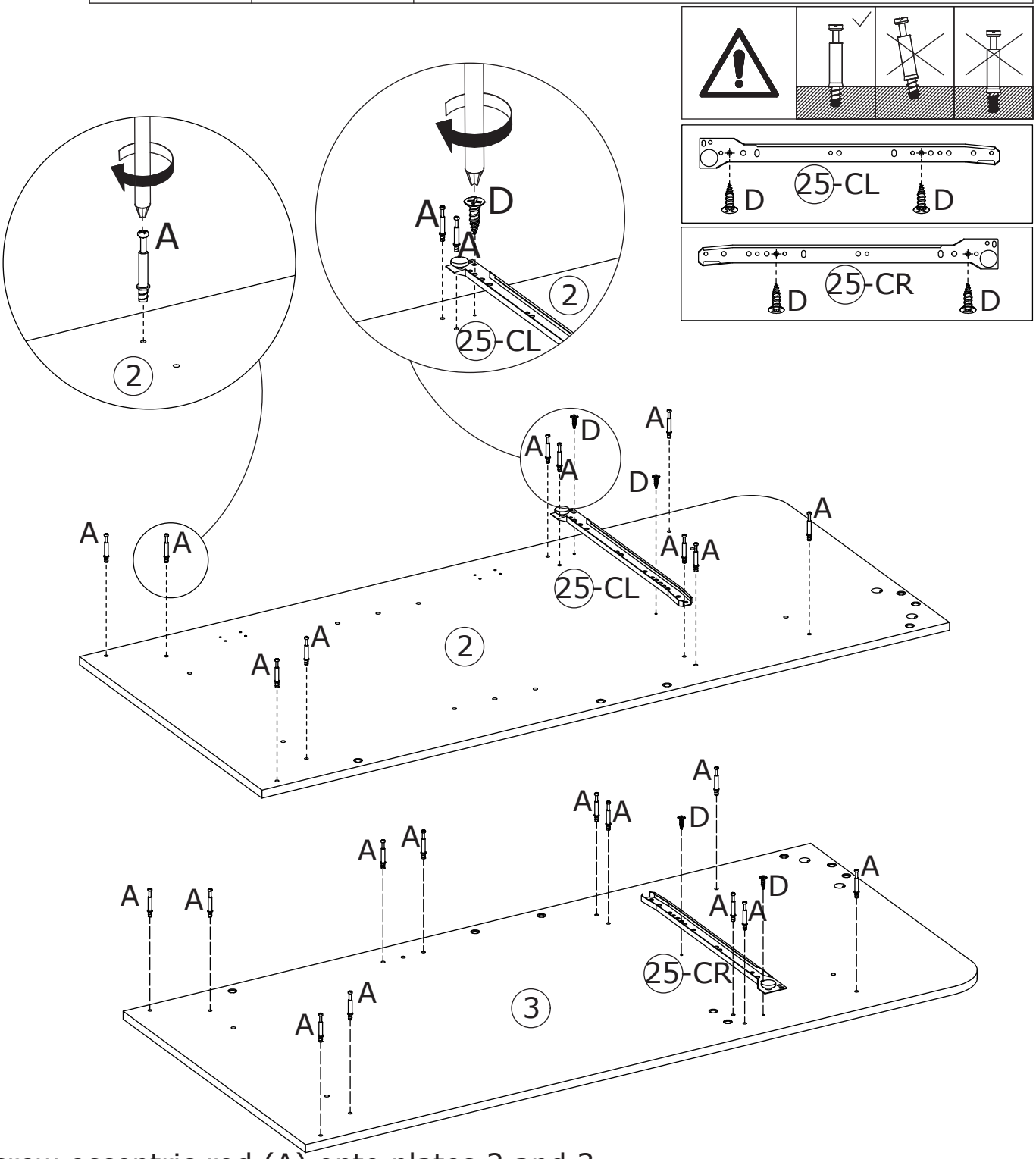

Screw eccentric rod (A) onto plates 2 and 3.
Secure slide (25-CL) and (25-CR) to plates 2 and 3, respectively, using screws (D).

2

D x 4

M3.5 x 12 mm

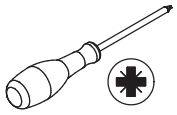

As shown in the figure, secure fittings 25-CL and 25-CR to opposite sides of plate 5 using screws (D).

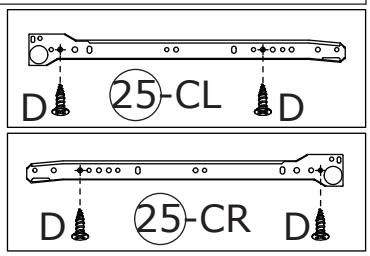

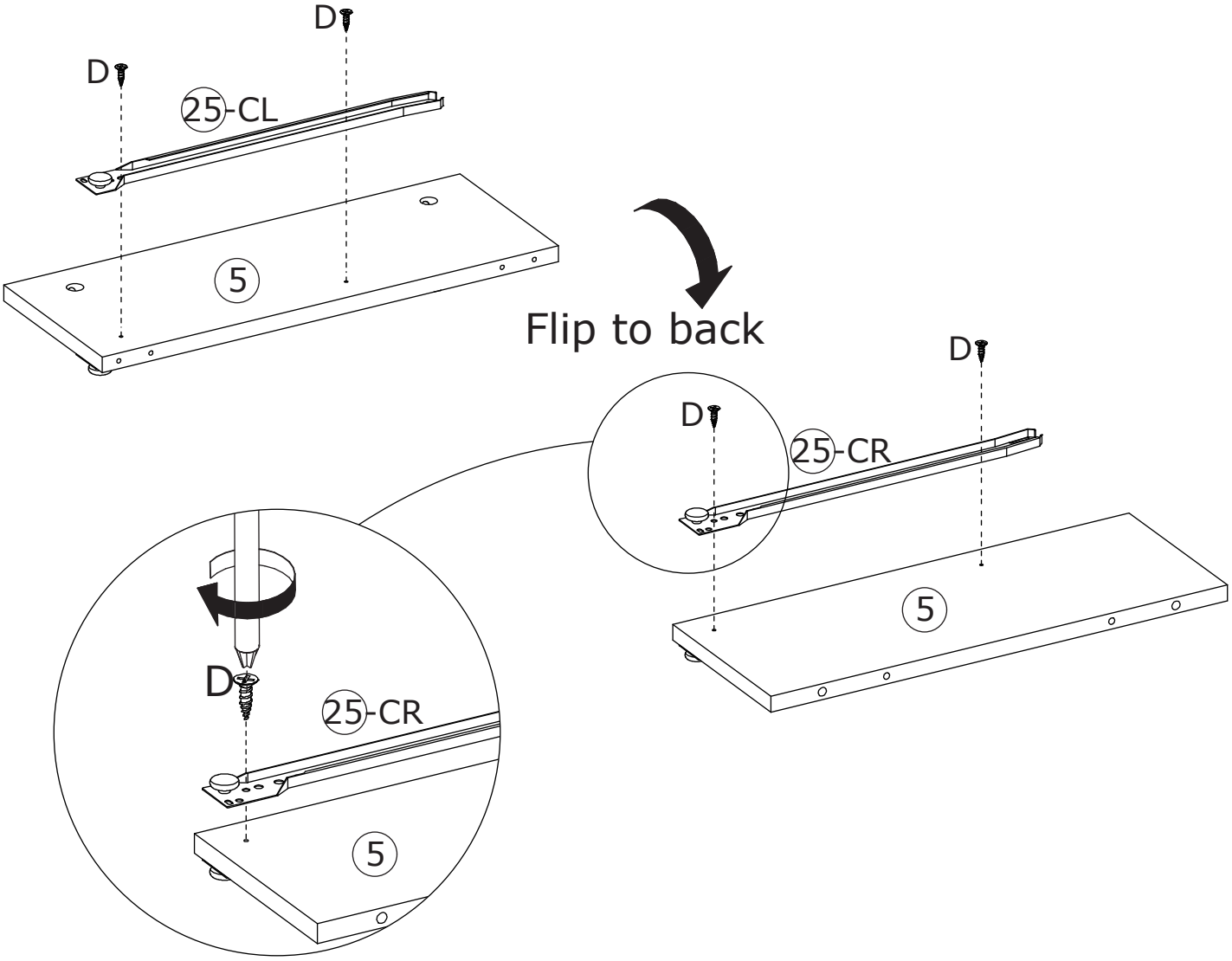

3

A x 14

M5 x 42 mm

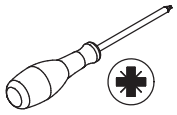

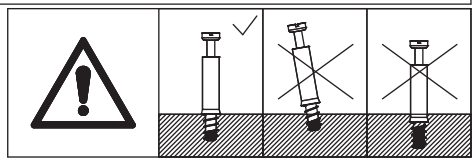

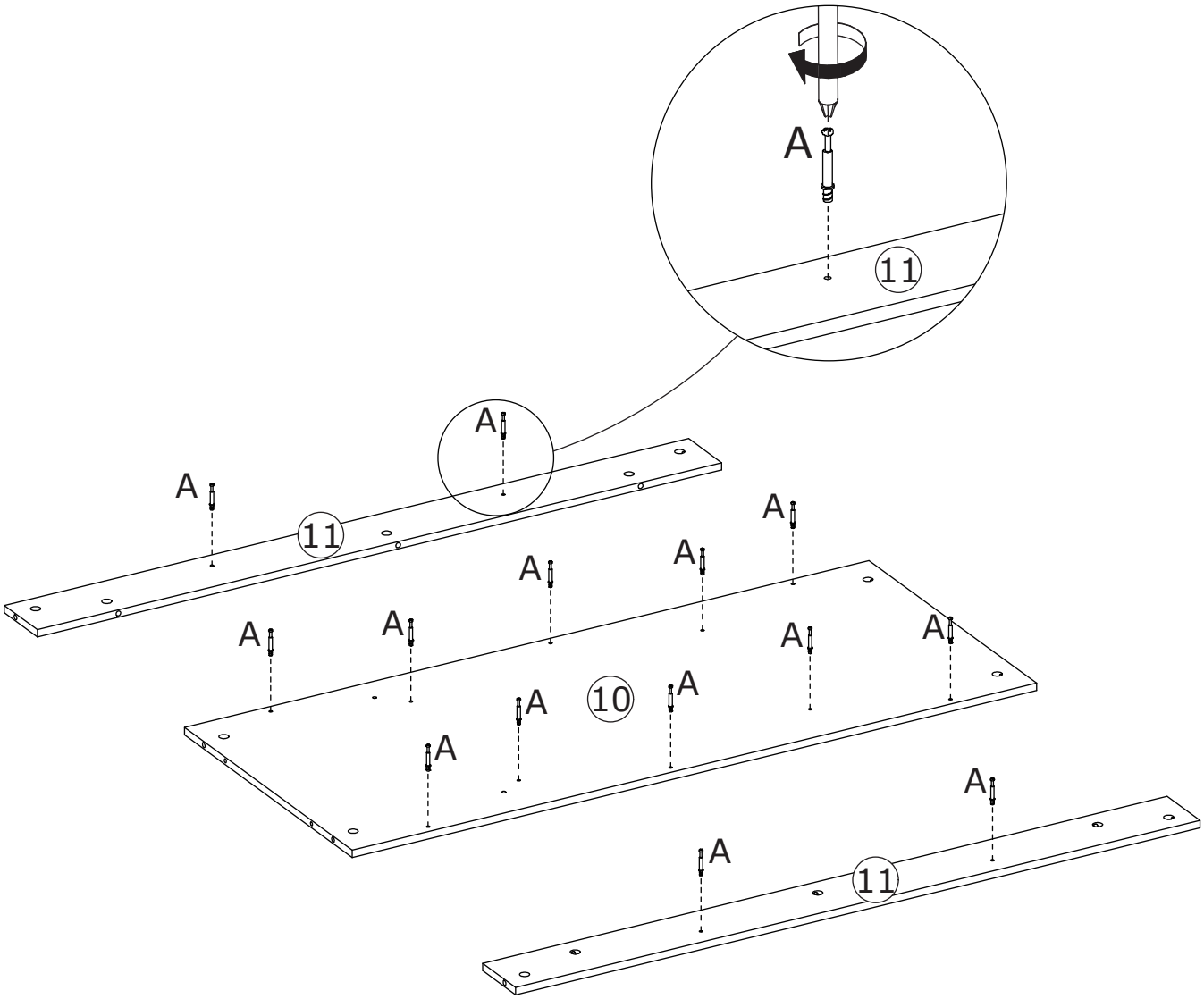

Screw eccentric rod (A) onto plates 10 and 11.

4

B x 14

∅15 x 10 mm

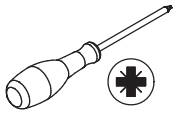

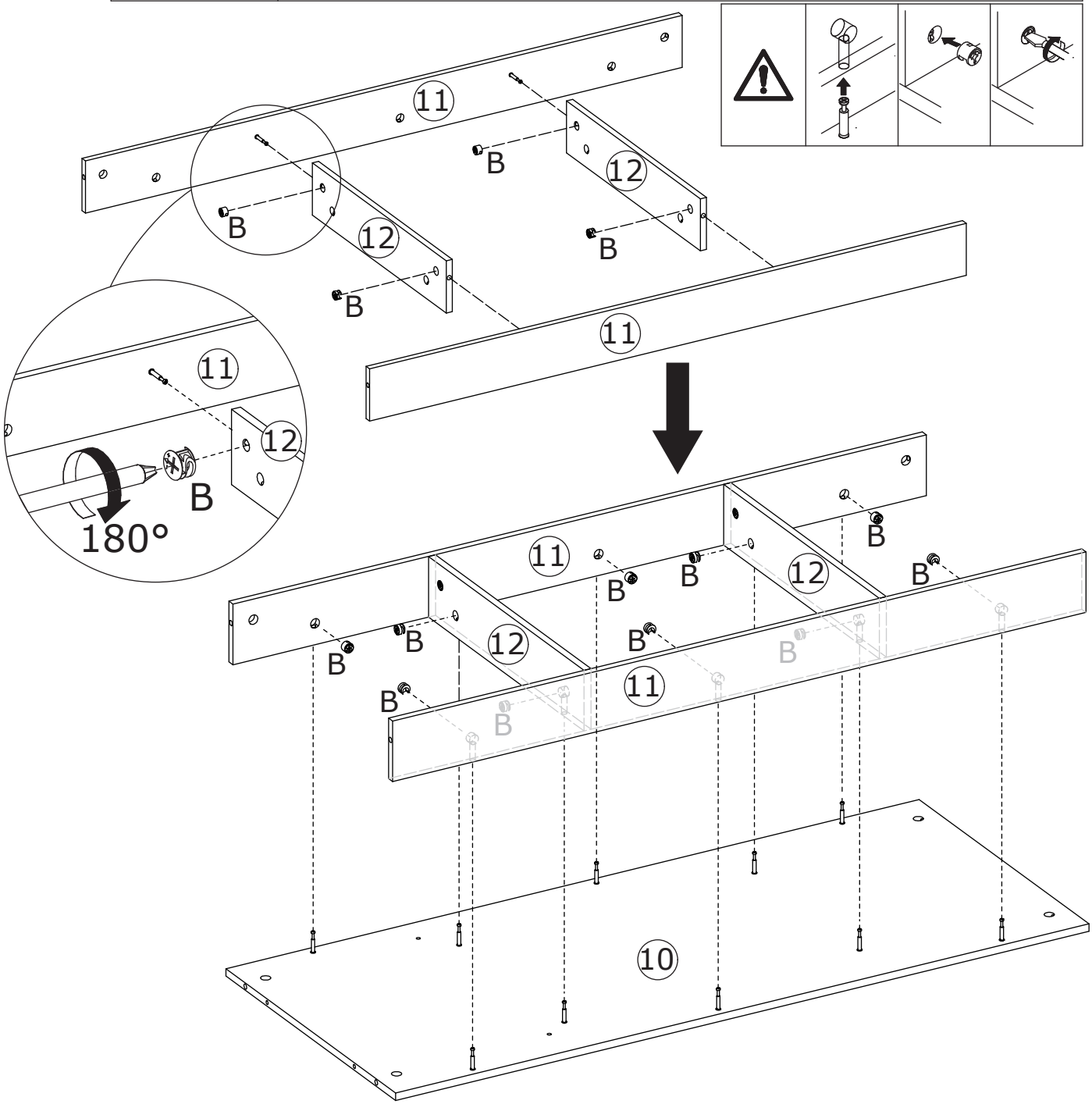

Connect plate 12 to plate 11, and tighten the eccentric pulley (B) by turning clockwise.

Connect the assembly component to plate 10, and tighten the eccentric pulley (B) by turning clockwise.

5

As shown in the figure, flip the combination unit.

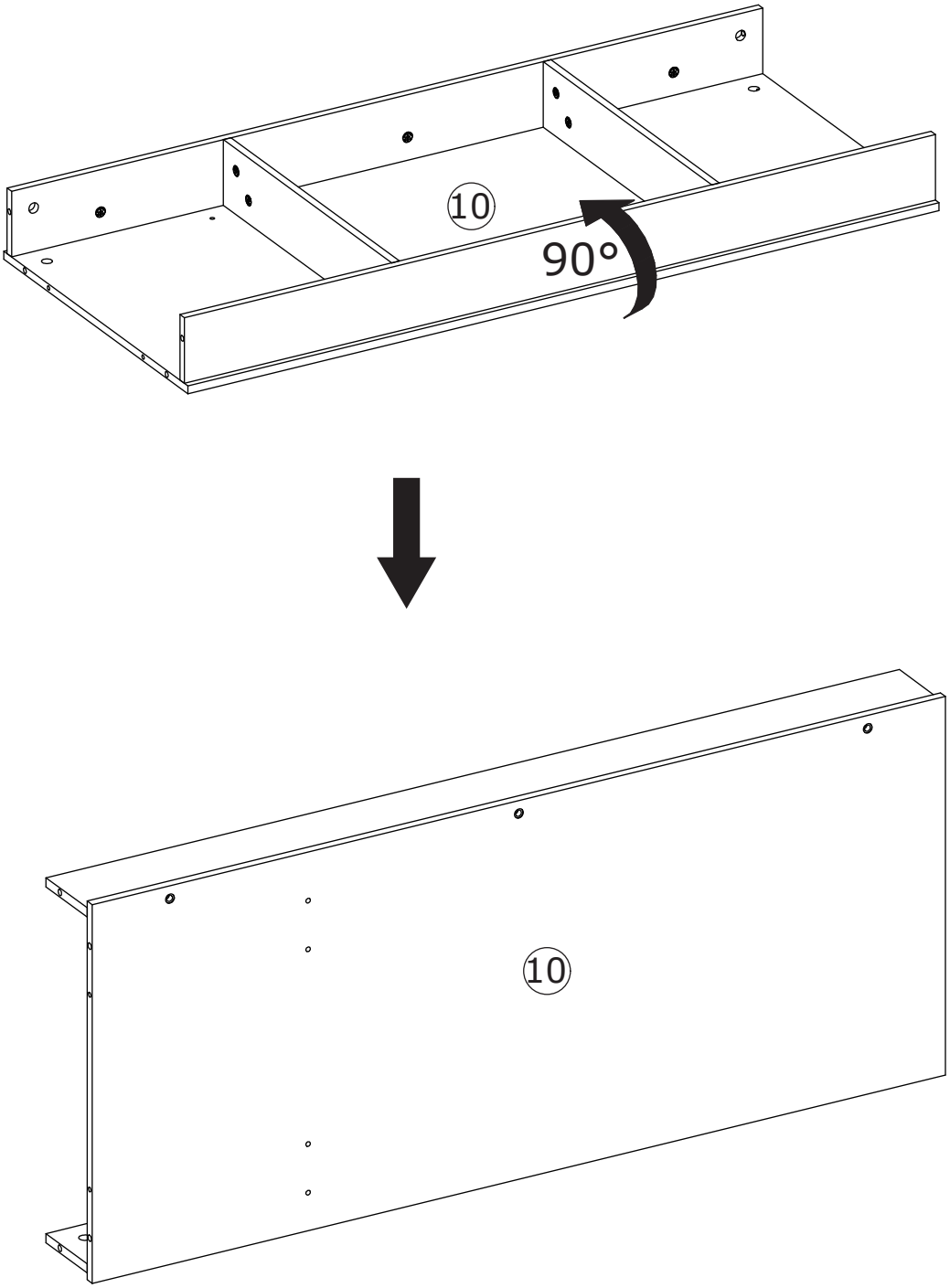

6

A x 2

M5 x 42 mm

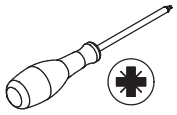

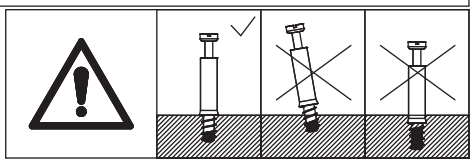

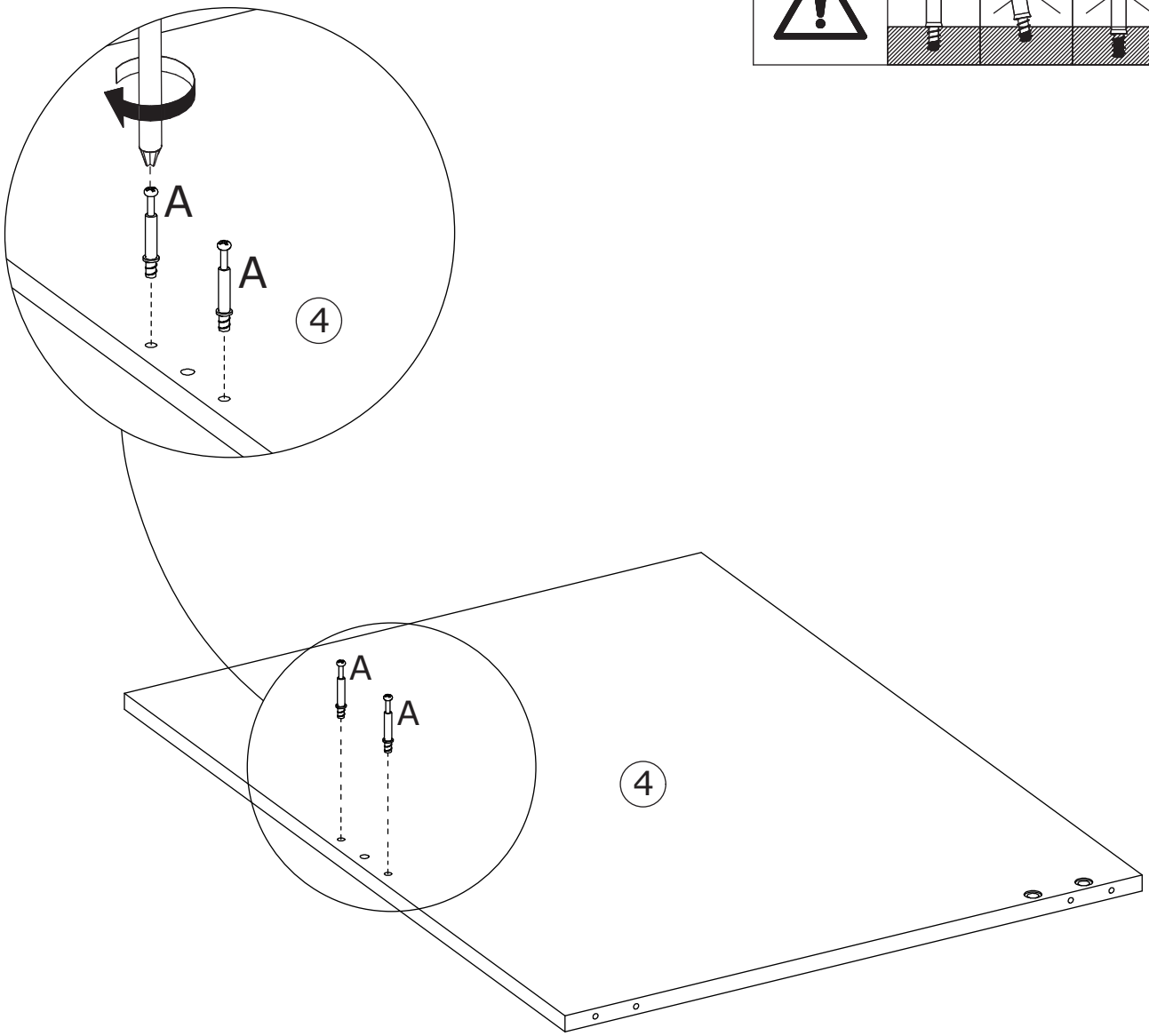

Screw eccentric rod (A) onto plate 4.

7

C x 2	G x 2	
		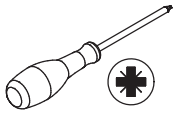
∅6 X 40 mm	M5 x 40 mm	

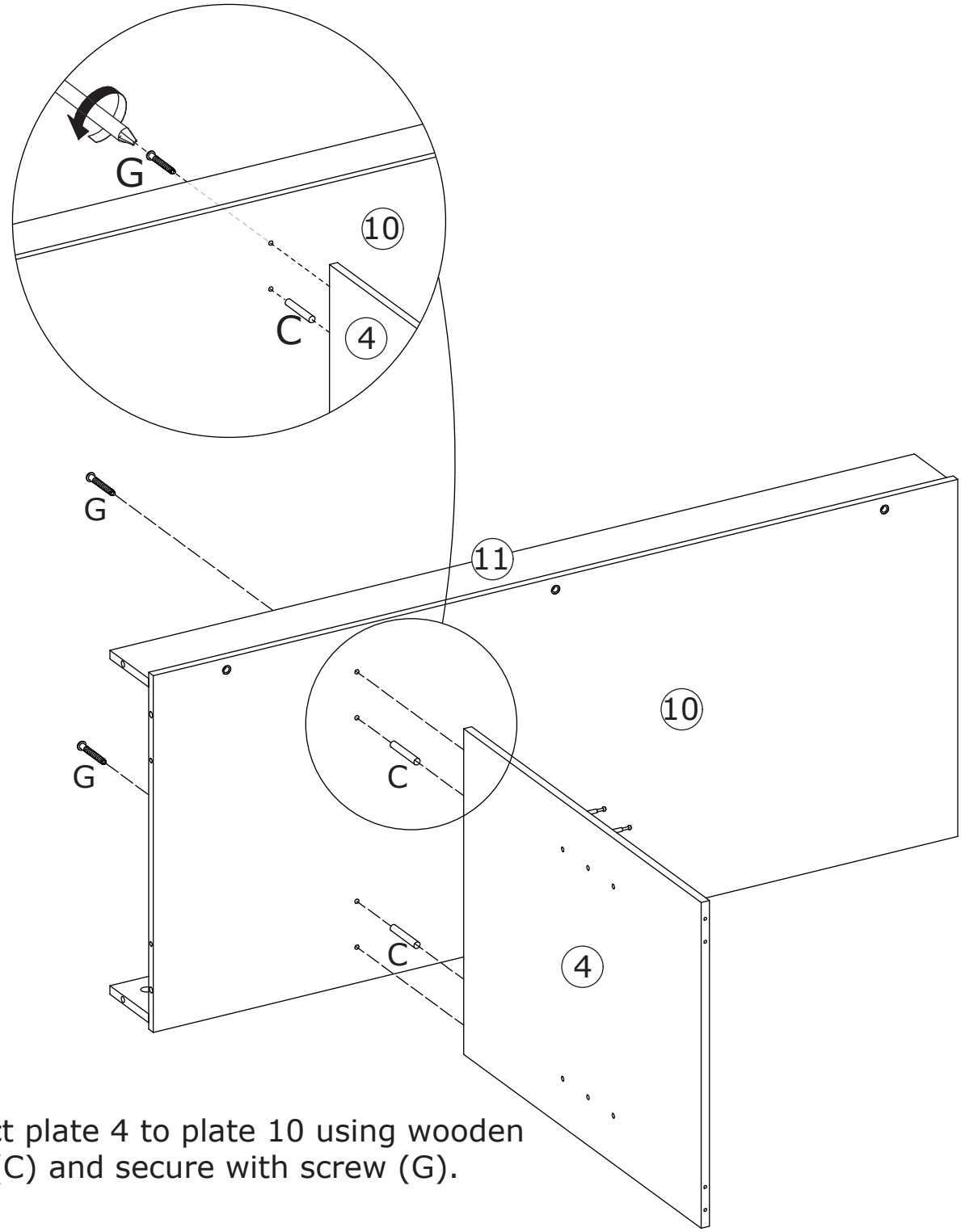

Connect plate 4 to plate 10 using wooden dowel (C) and secure with screw (G).

8

B x 4	C x 2	
		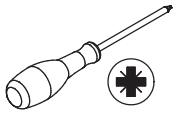
∅15 x 10 mm	∅6 X 40 mm	

Connect plate 2 to plates 10 and 11 using wooden dowel (C), and tighten the eccentric pulley (B) by turning clockwise.

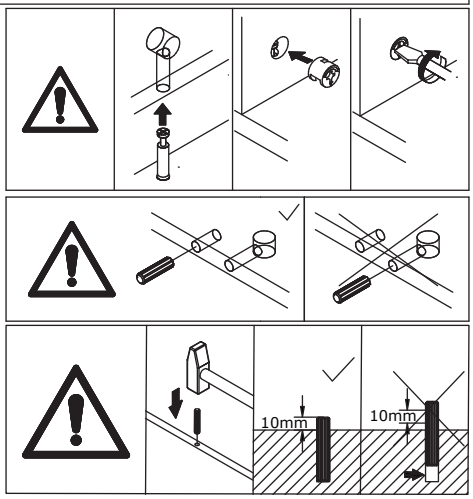

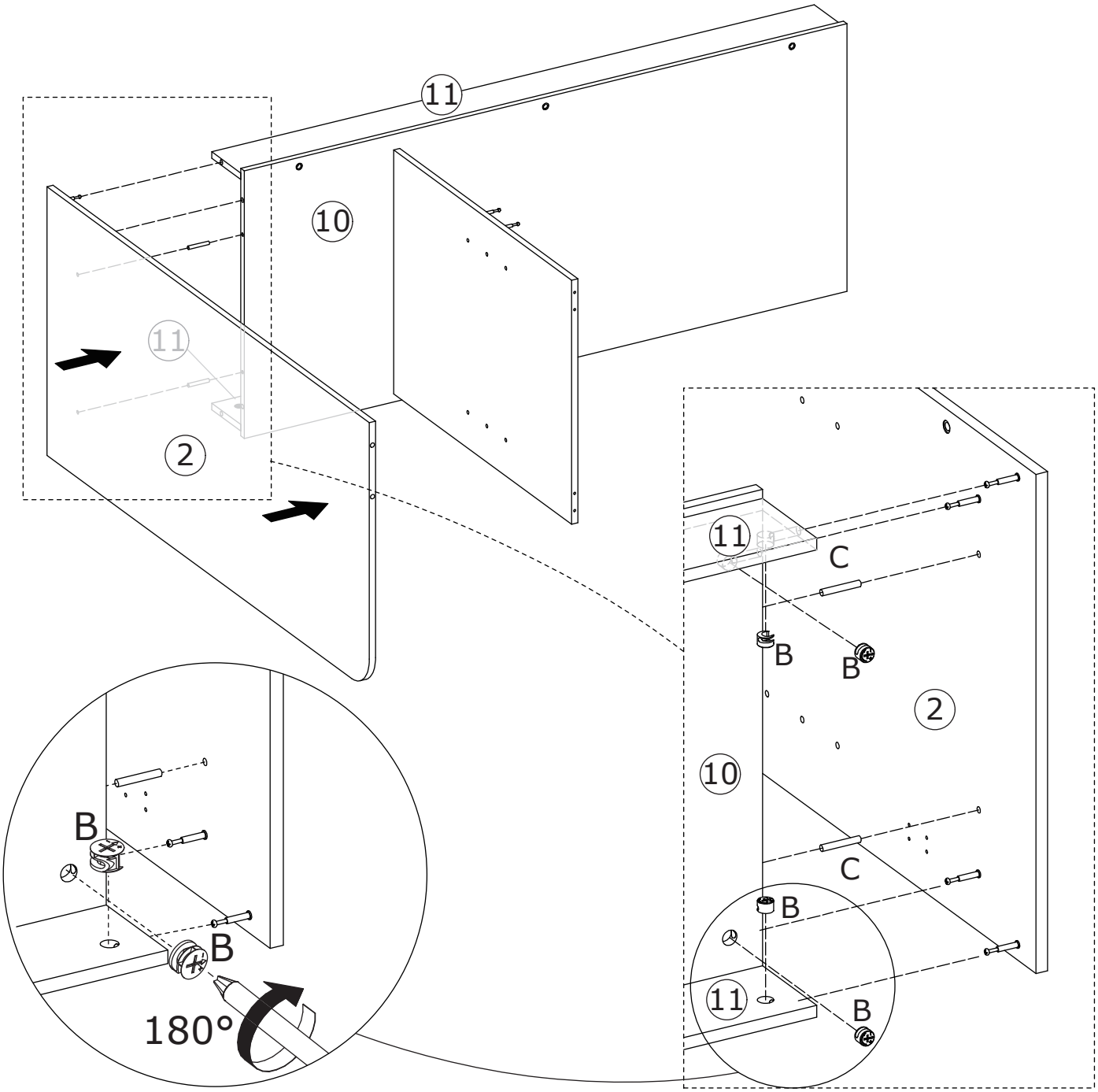

9

B x 2

∅15 x 10 mm

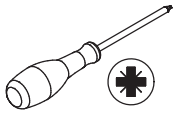

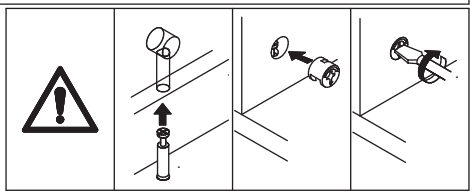

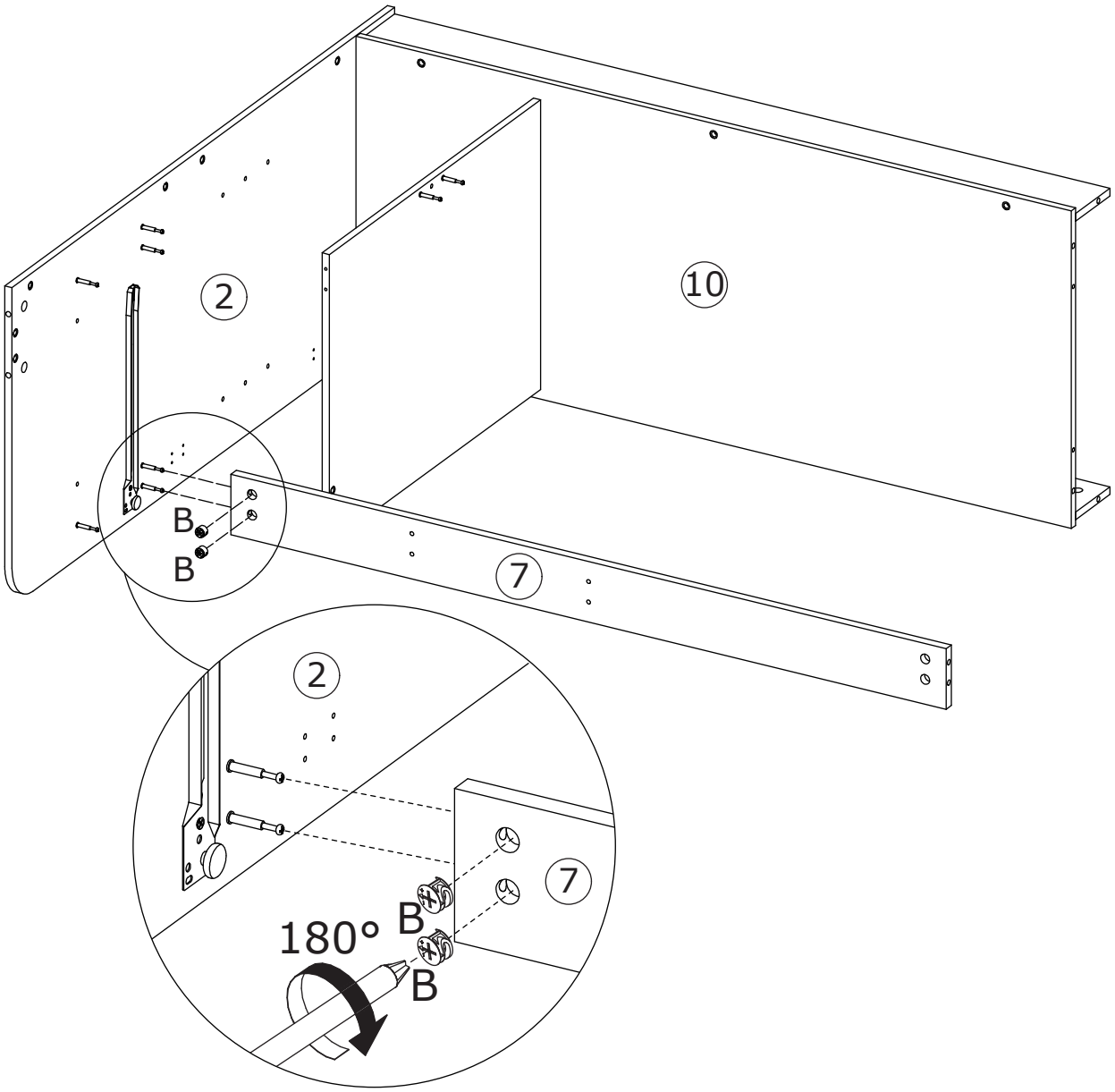

Connect plate 7 to plate 2, and tighten the eccentric pulley (B) by turning clockwise.

10

G x 2	
M5 x 40 mm	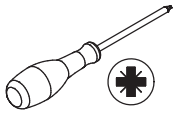

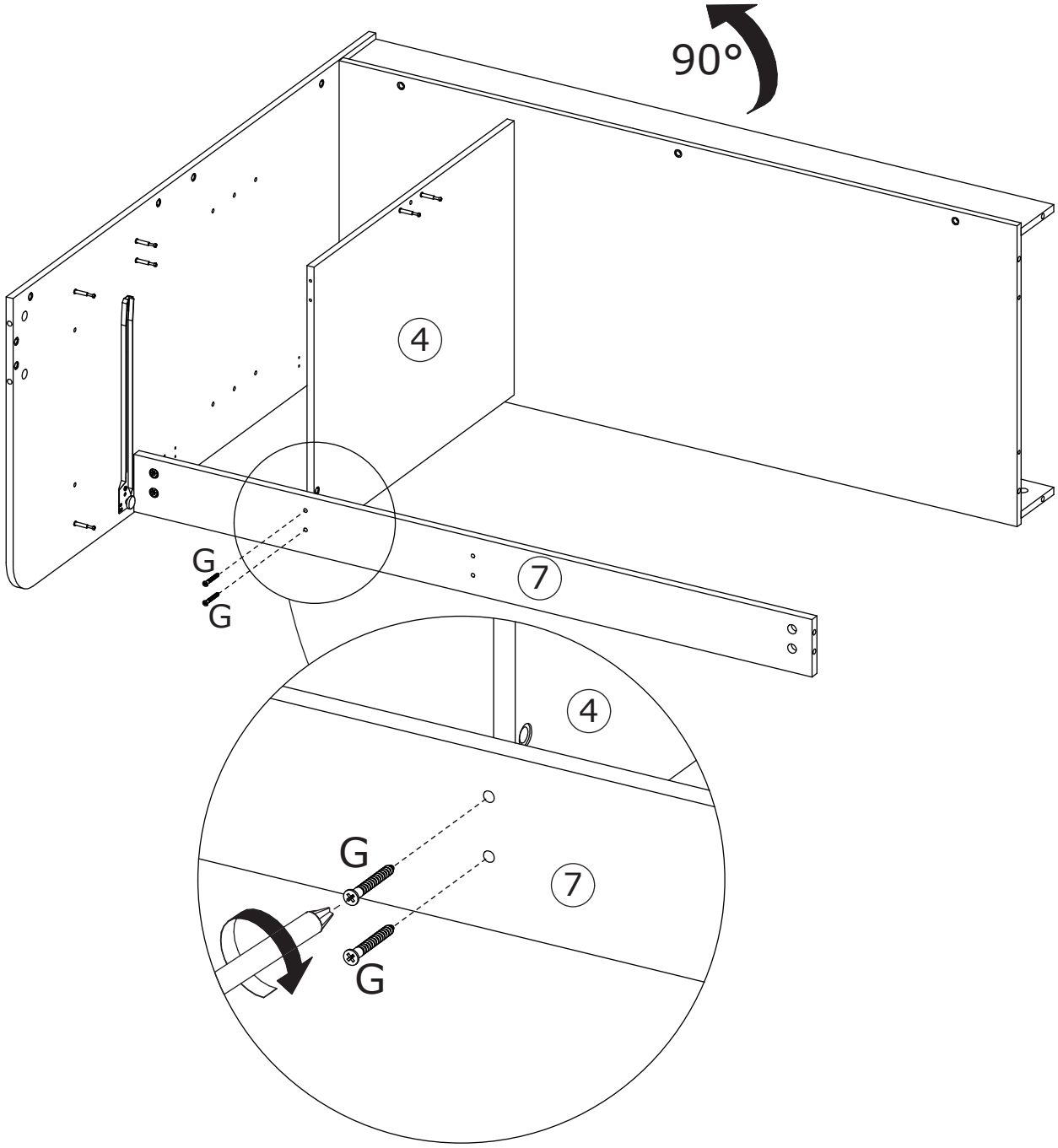

Secure plate 7 to plate 4 using screw (G), then flip the assembly unit in the direction of the arrow.

11

B x 2

∅15 x 10 mm

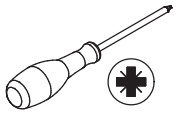

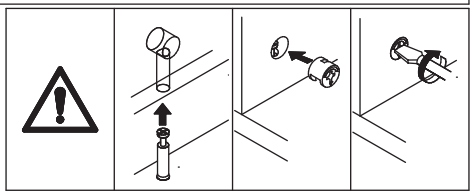

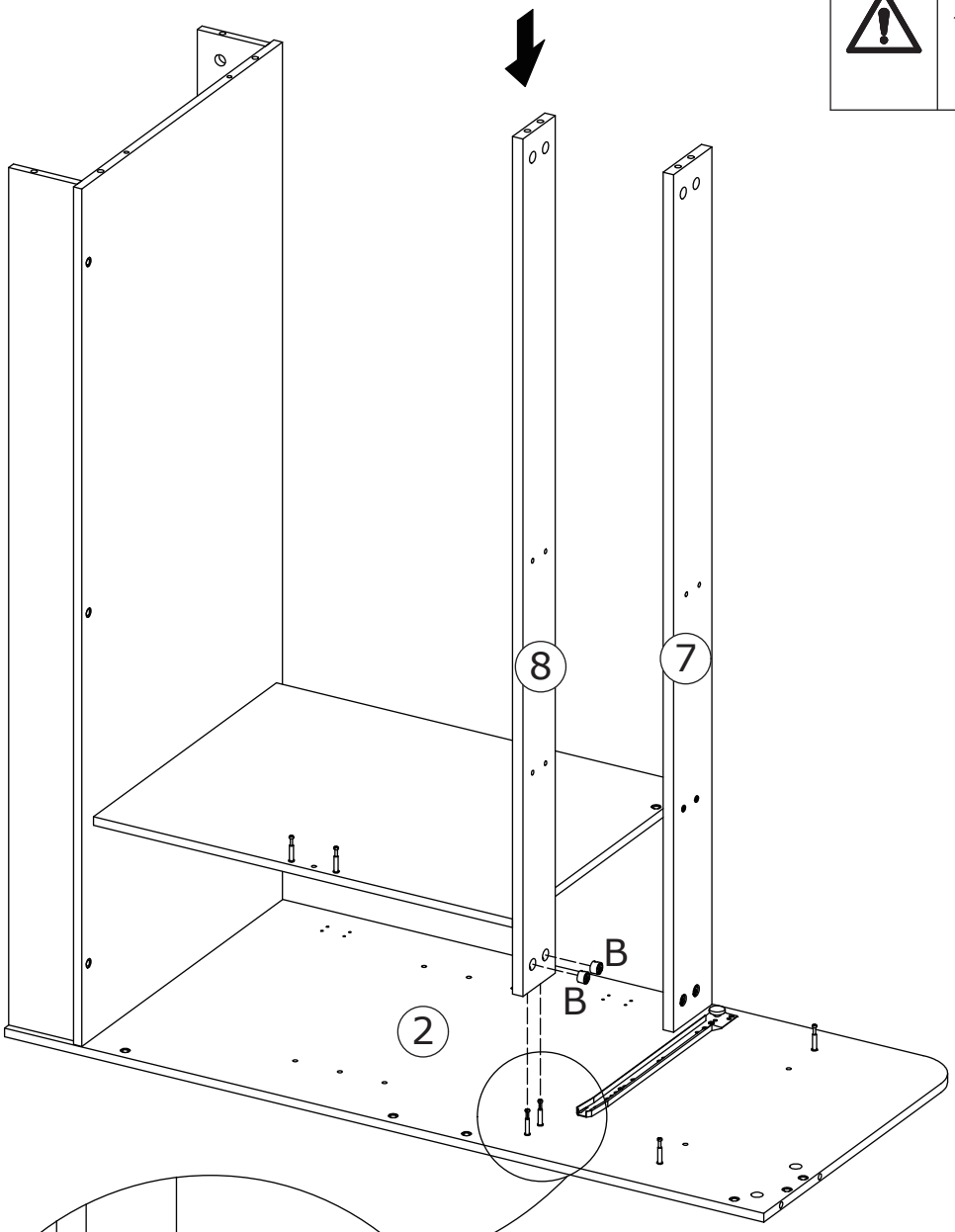

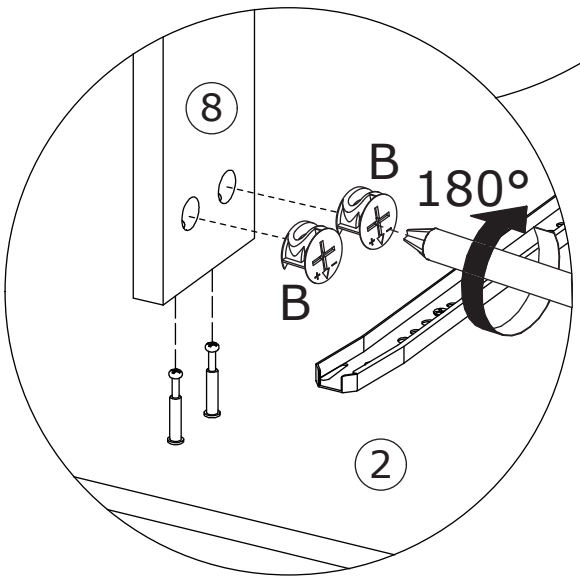

Connect plate 8 to plate 2, and tighten the eccentric pulley (B) by turning clockwise.

12

G x 2

M5 x 40 mm

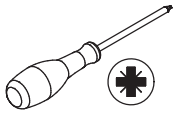

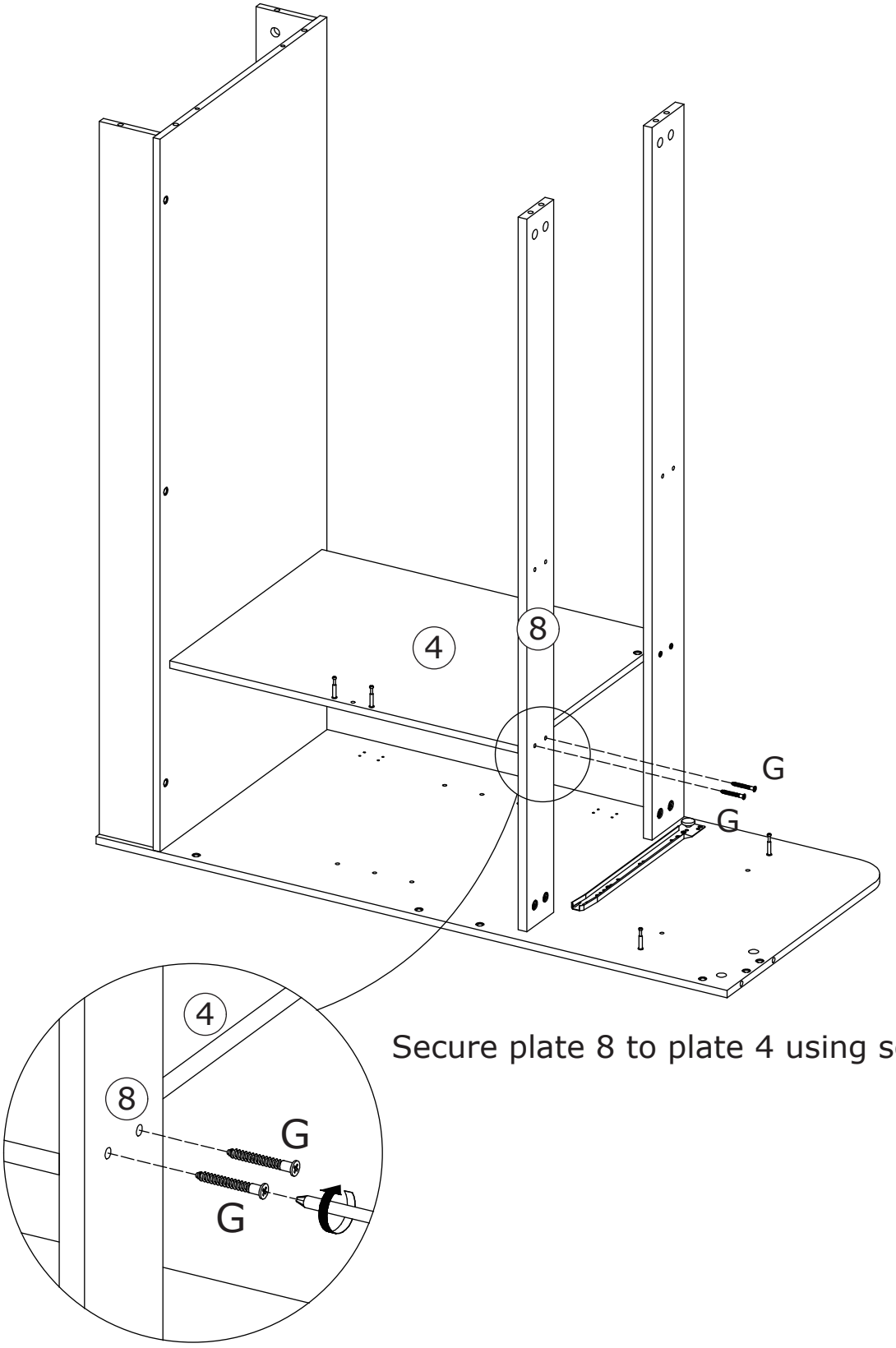

Secure plate 8 to plate 4 using screw (G).

13

As shown in the figure, rotate the installation perspective in the direction of the arrow.

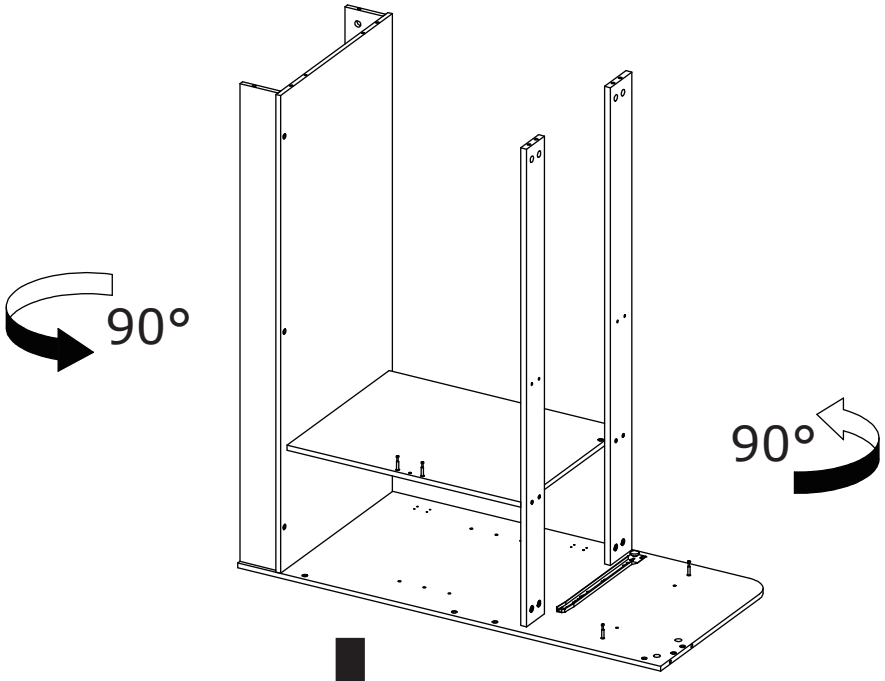

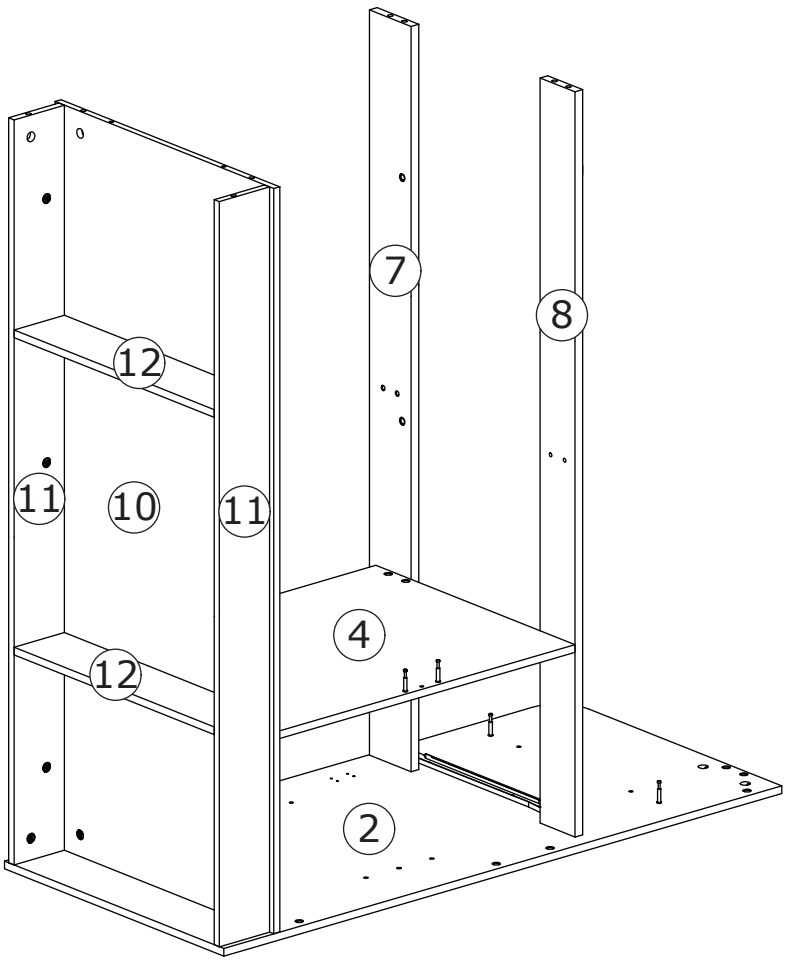

14

A x 2	B x 2	C x 2	
			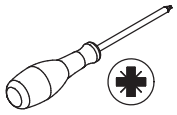
M5 x 42 mm	∅15 x 10 mm	∅6 X 40 mm	

Screw eccentric rod (A) onto plate 1.

Connect plate 5 to plate 1 using wooden dowel (C), and tighten the eccentric pulley (B) by turning clockwise.

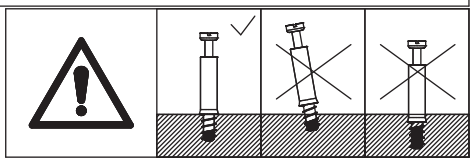

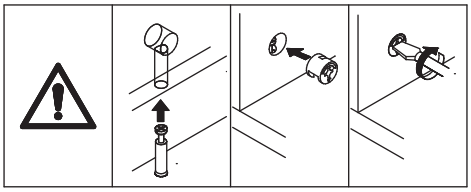

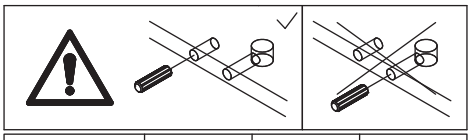

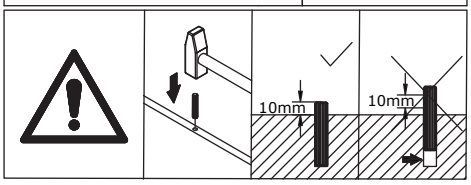

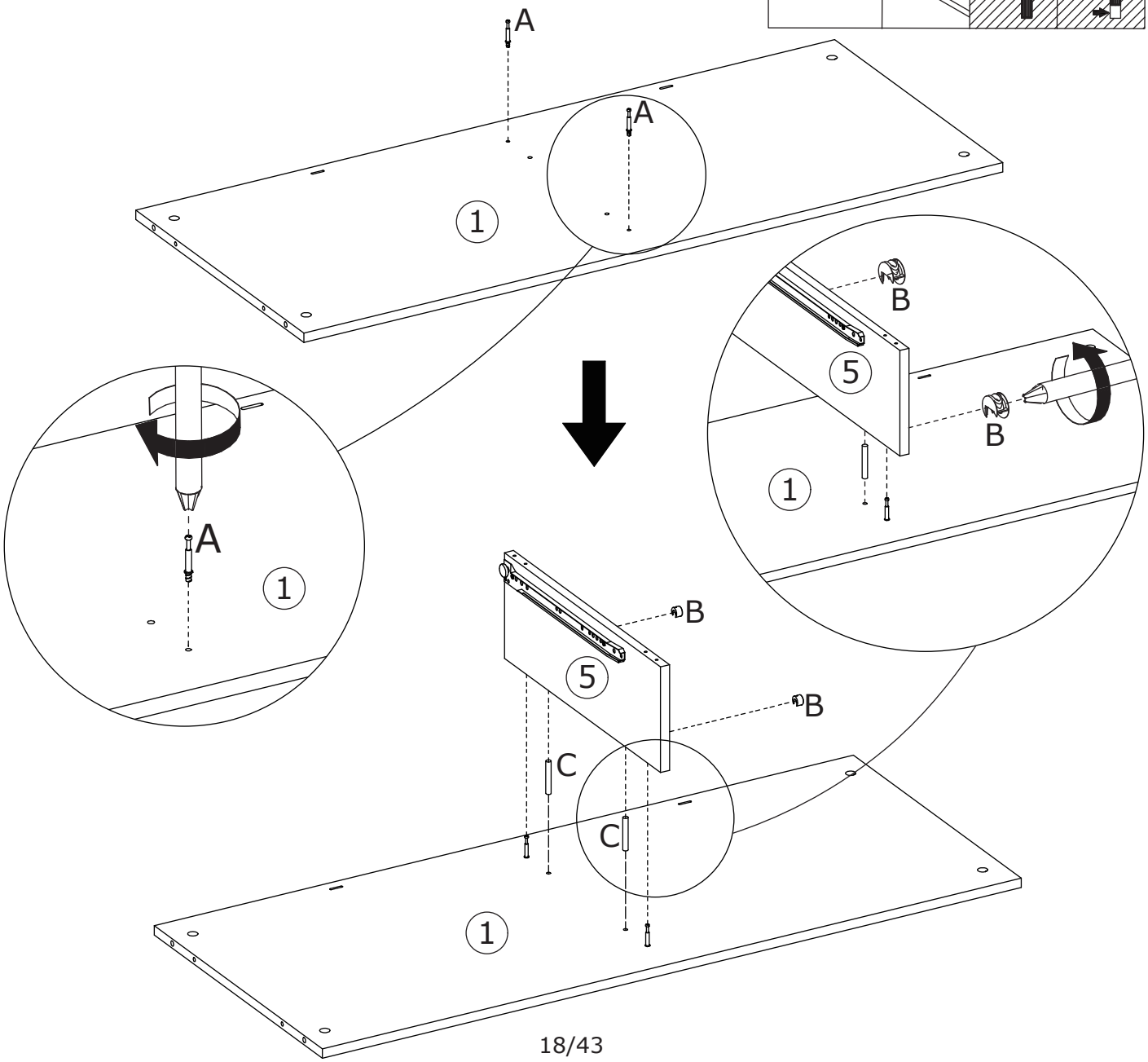

15

As shown in the figure, the plate needs to be stood upright in preparation for the next installation step.

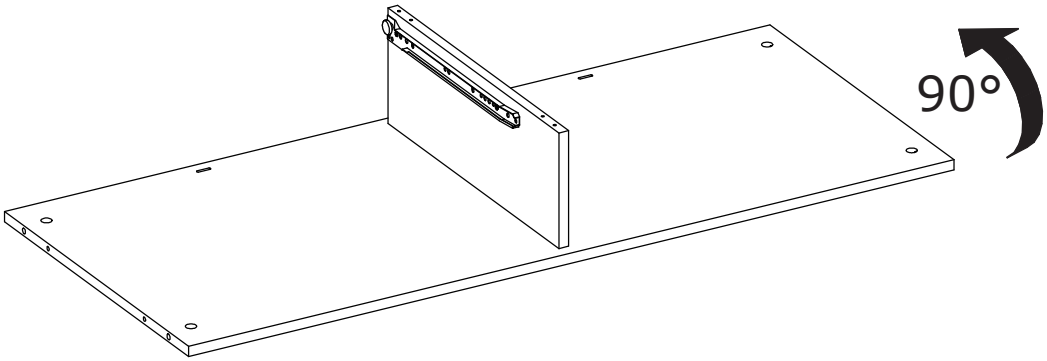

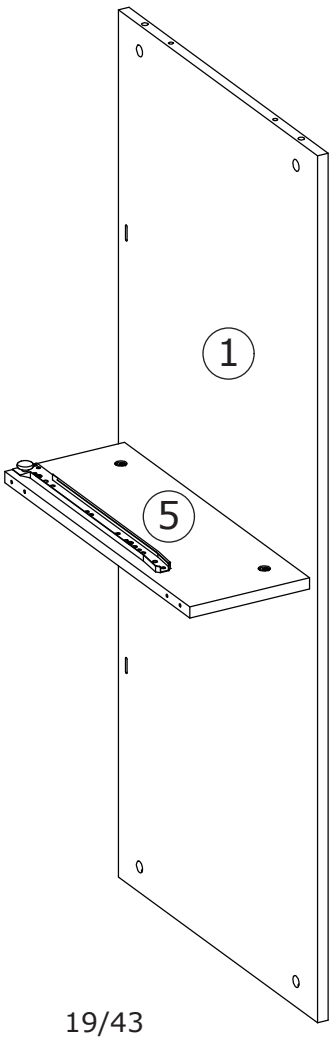

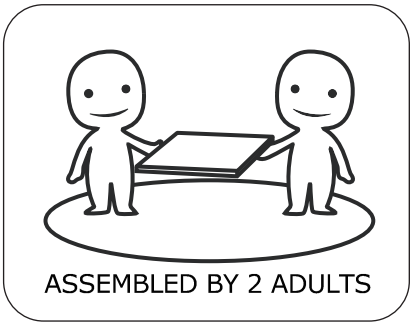

16

B x 2	C x 2	
		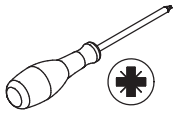
∅15 x 10 mm	∅6 X 40 mm	

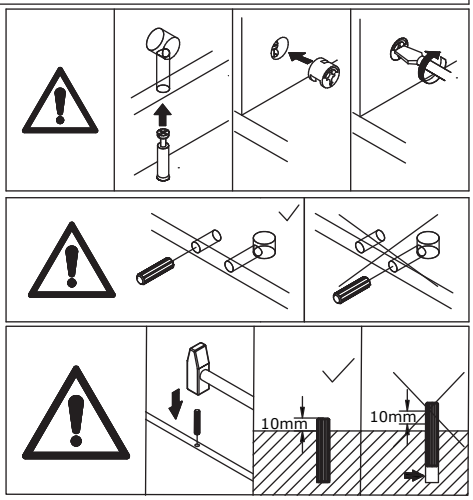

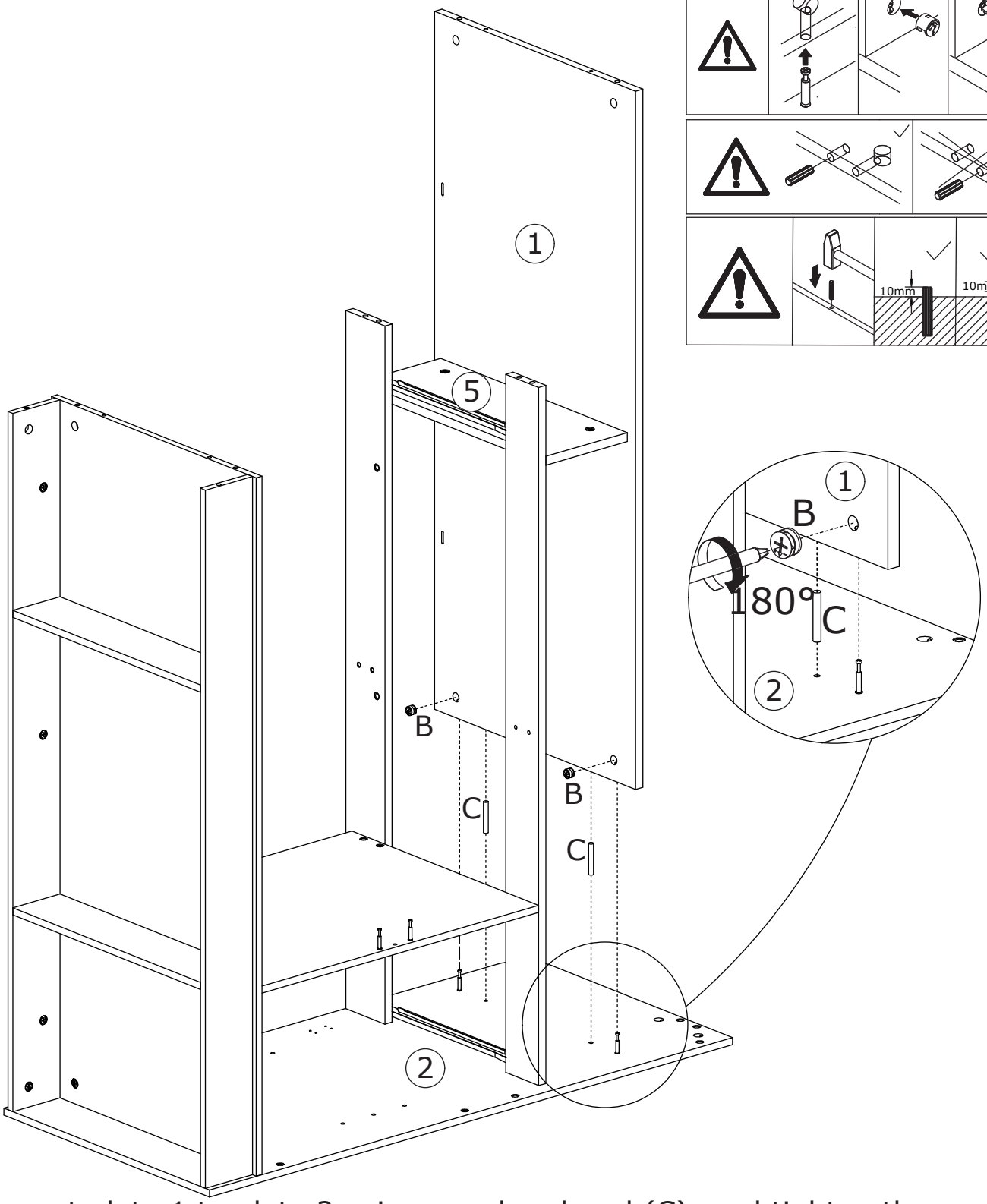

Connect plate 1 to plate 2 using wooden dowel (C), and tighten the eccentric pulley (B) by turning clockwise.

17

G x 4

M5 x 40 mm

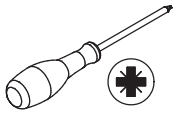

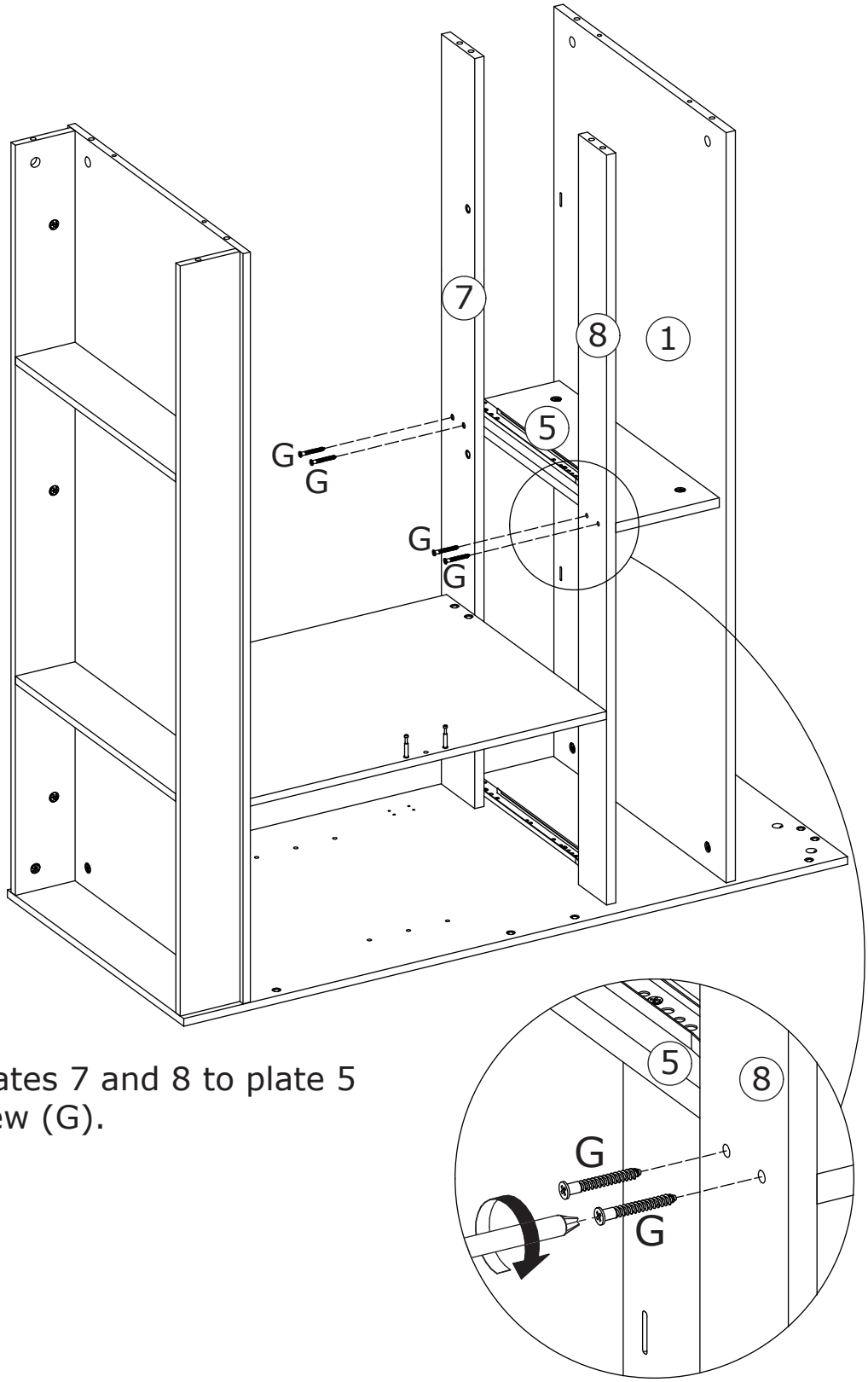

Secure plates 7 and 8 to plate 5 using screw (G).

18

B x 2	C x 1	
		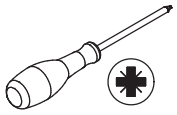
∅15 x 10 mm	∅6 X 40 mm	

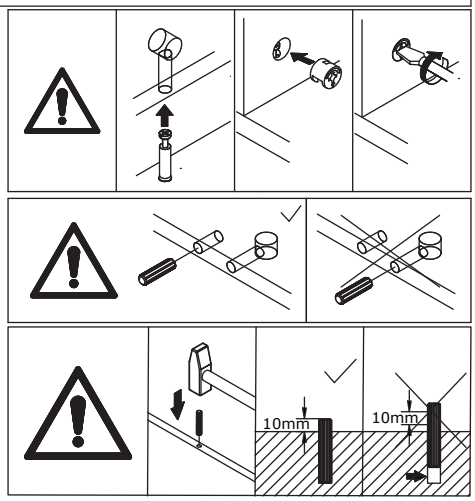

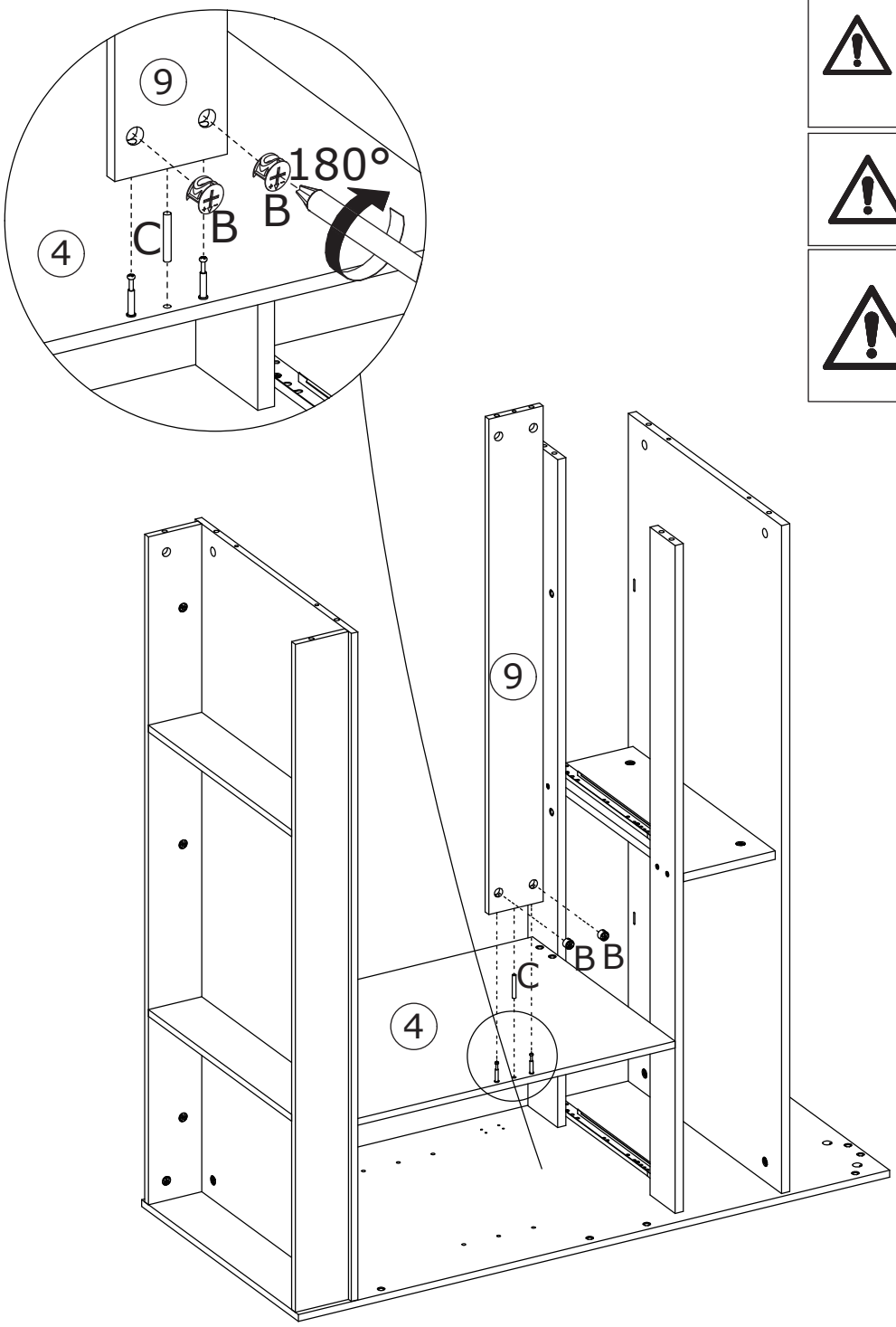

Connect plate 9 to plate 4 using wooden dowel (C), and tighten the eccentric pulley (B) by turning clockwise.

19

B x 12	C x 5	
		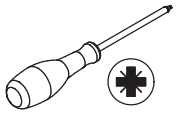
∅15 x 10 mm	∅6 X 40 mm	

Connect plate 3 to the assembly unit using wooden dowel (C), and tighten the eccentric pulley (B) by turning clockwise.

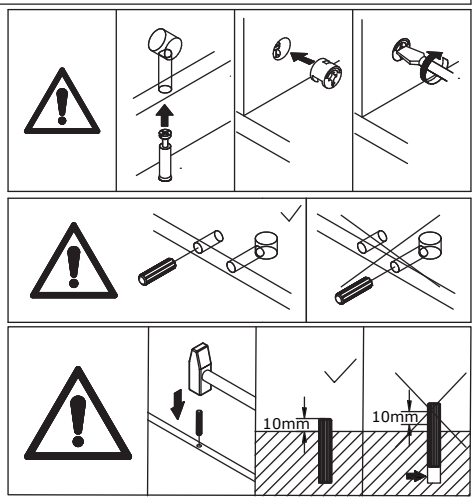

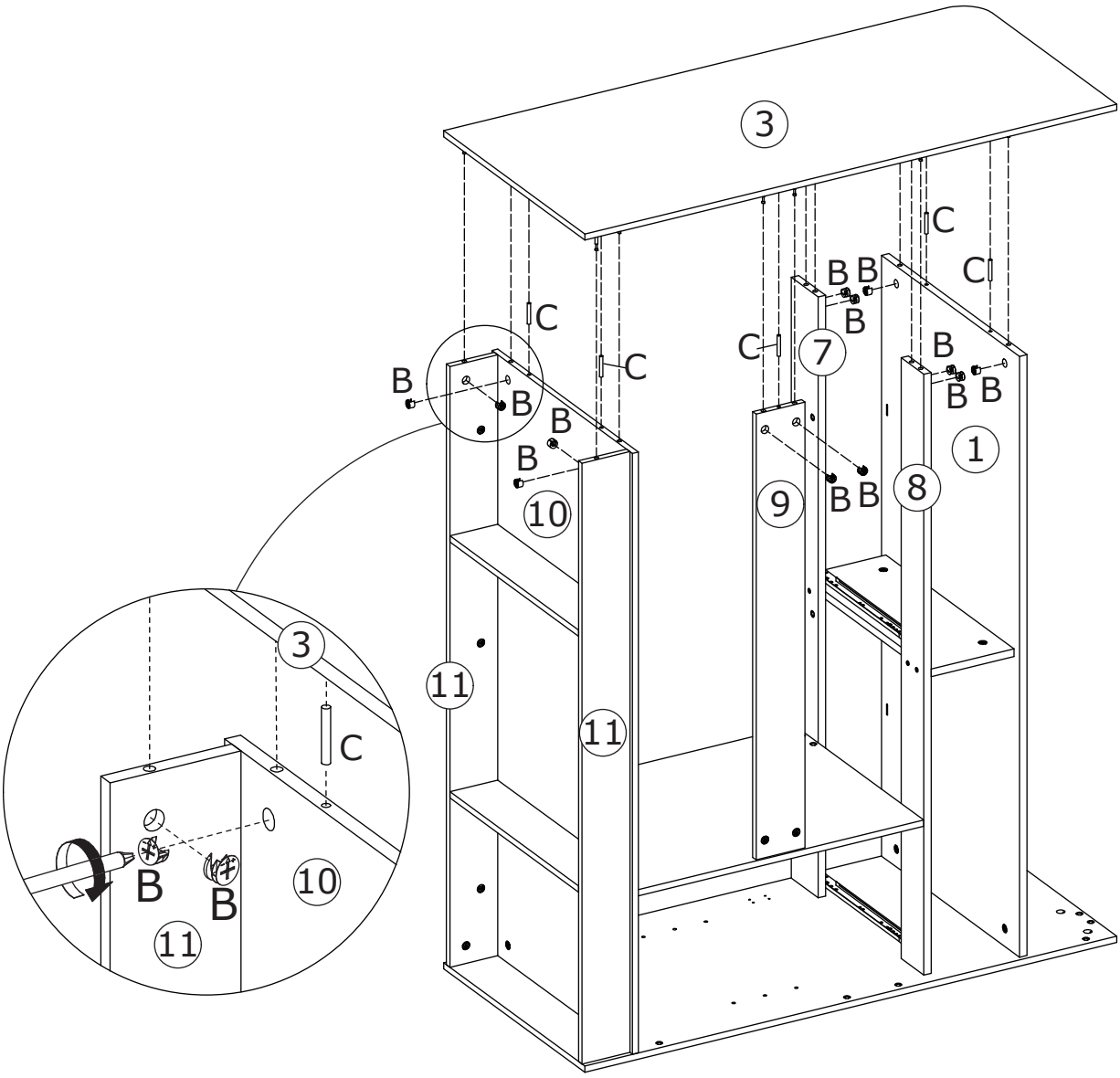

20

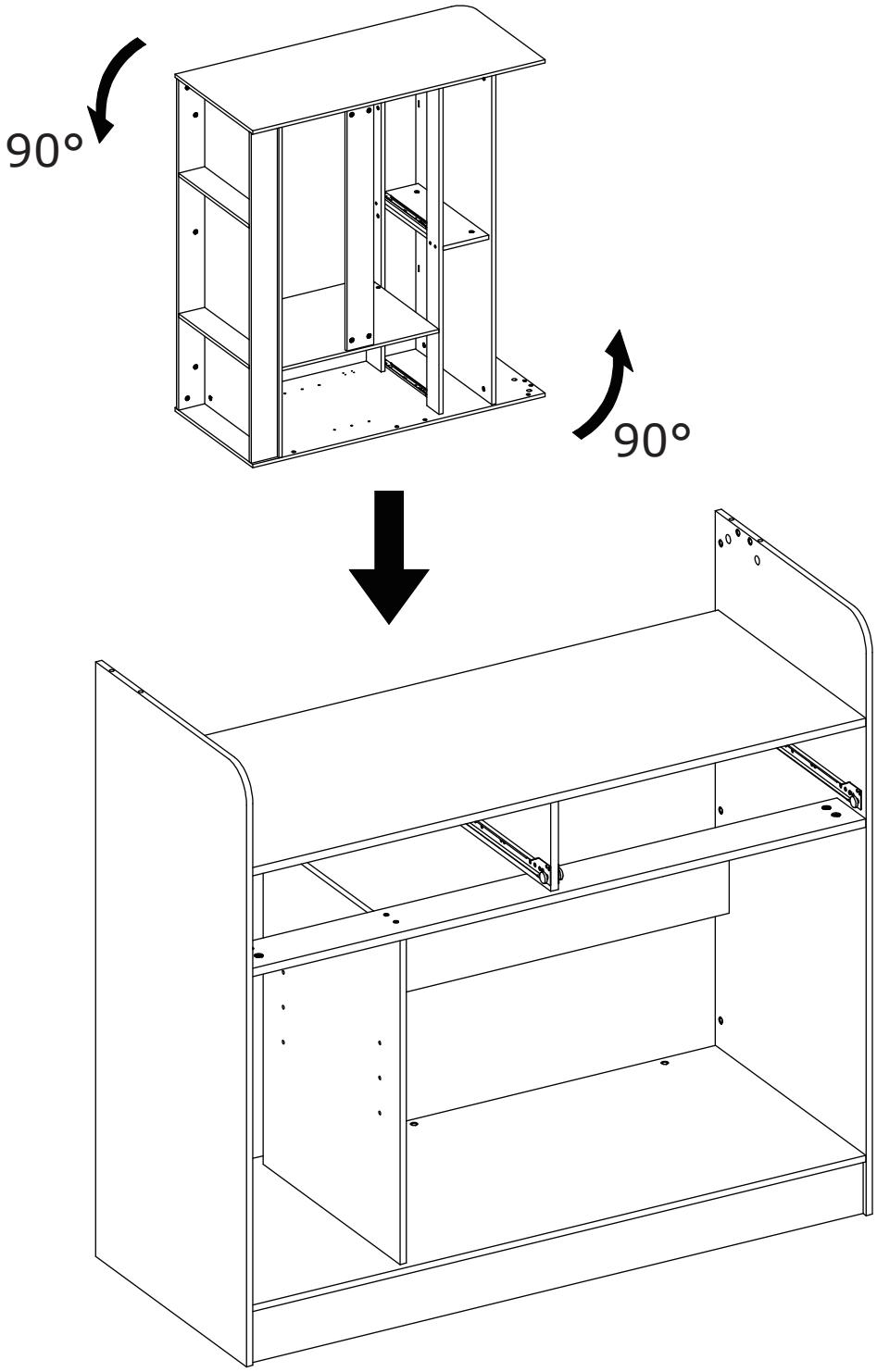

As shown in the illustration, lift the cabinet body in the direction of the arrow, then position it upright.

21

K x 3	L x 3	x 1	x 1	
M6 x 28 mm	M6	#4	#10	

Secure parts 23 and 24 using screw (K) and nut (L).

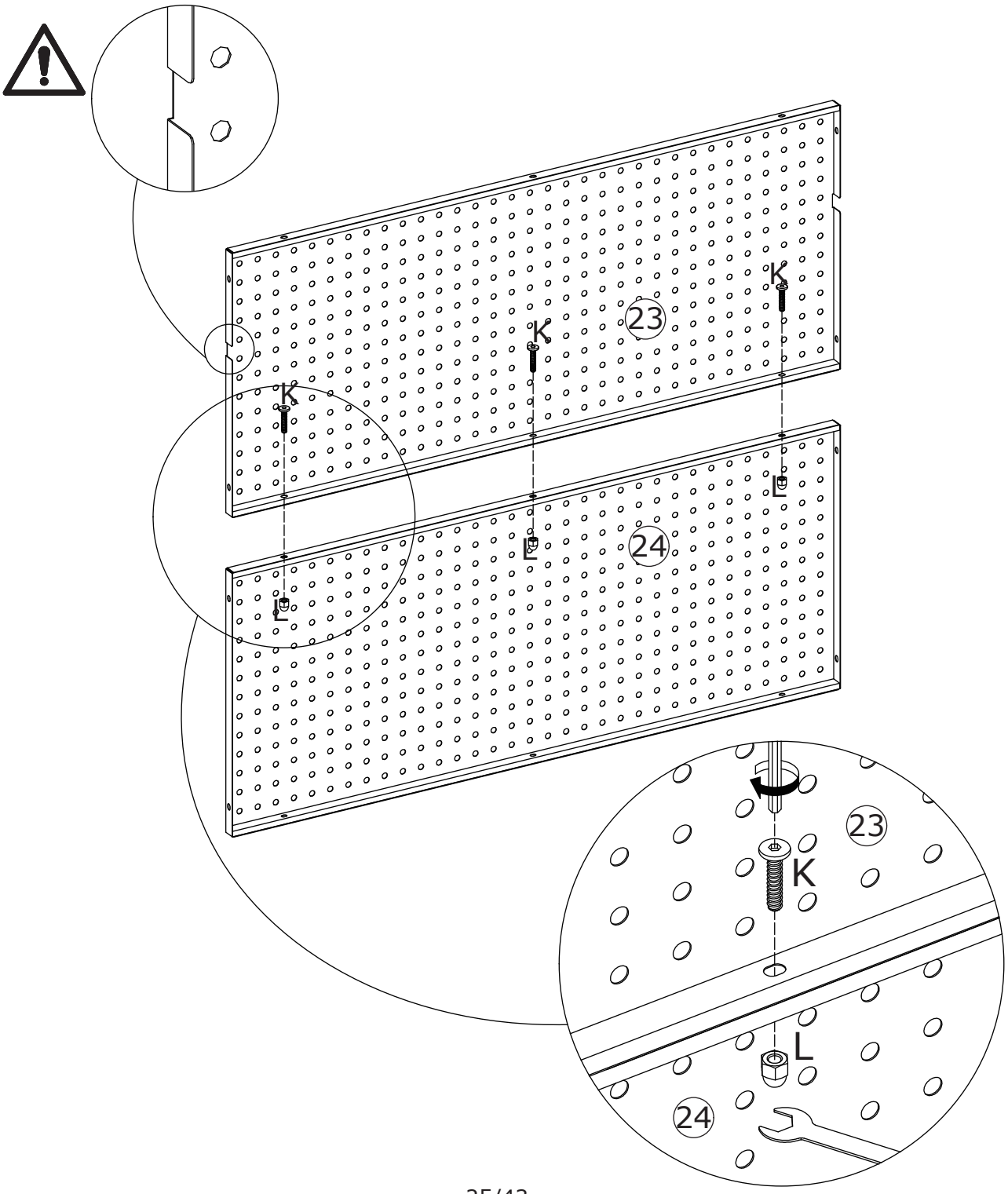

22

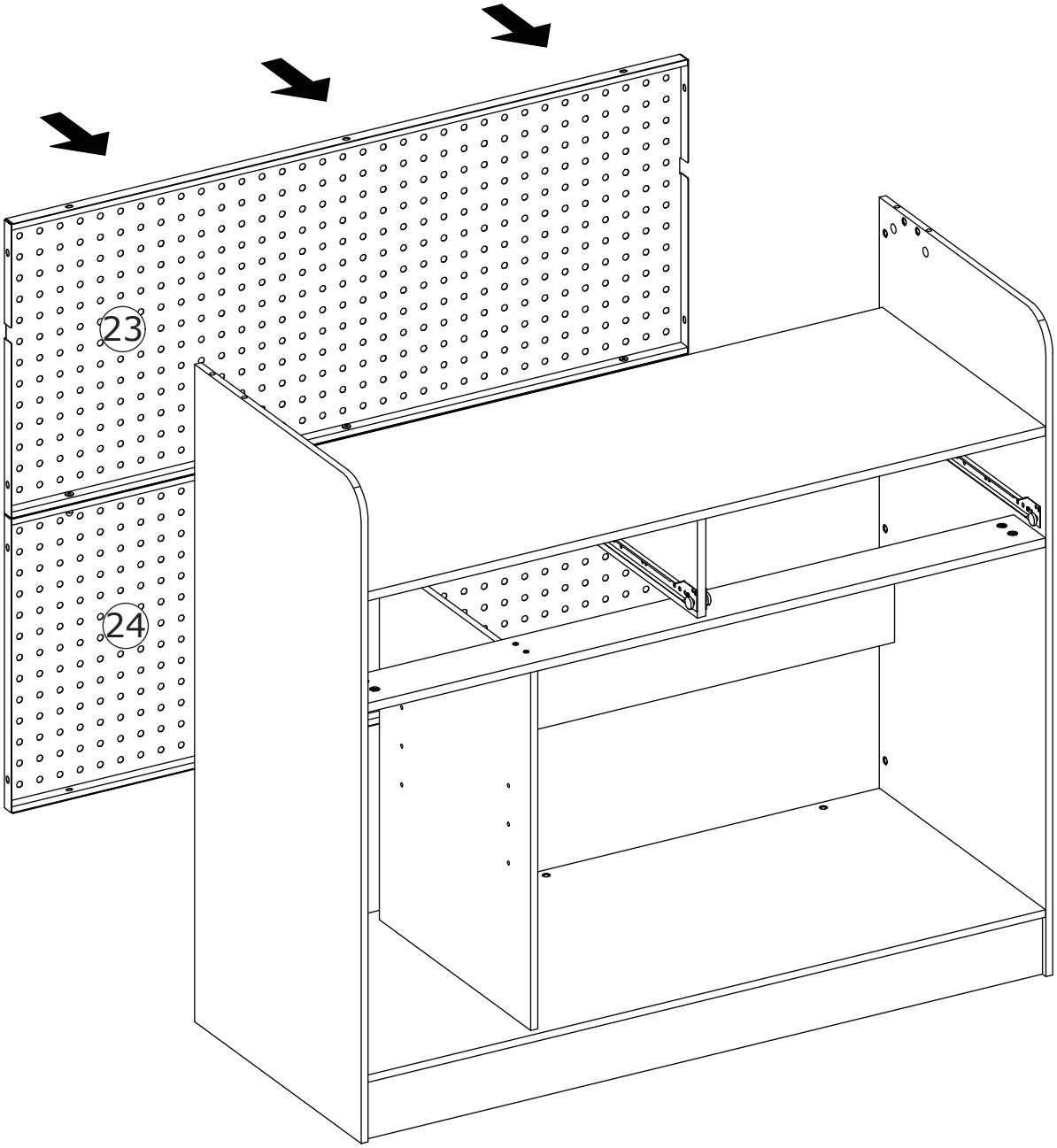

Attach parts 23 and 24 onto the assembly unit.

23

H x 8	J x 3	M x 11	x 1	
M6 x 10 mm	M6 x 20 mm	∅15 x 6 x 2 mm	#4	

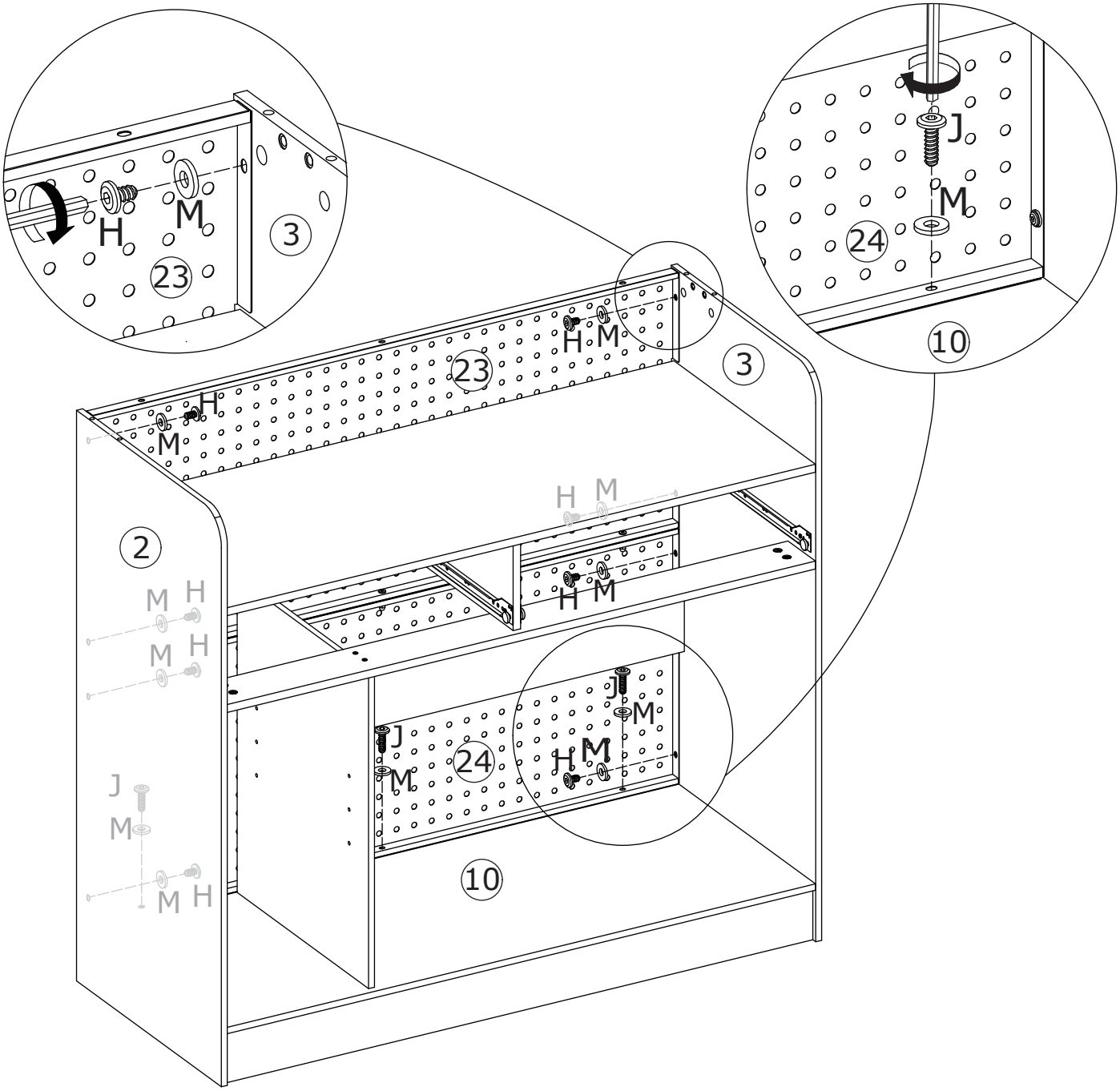

Secure parts 23 and 24 to plates 2 and 3 using screw (H) and washer (M).
Secure part 24 to plate 10 using screw (J) and washer (M).

24

H x 8	x 1	
M6 x 10 mm	#4	

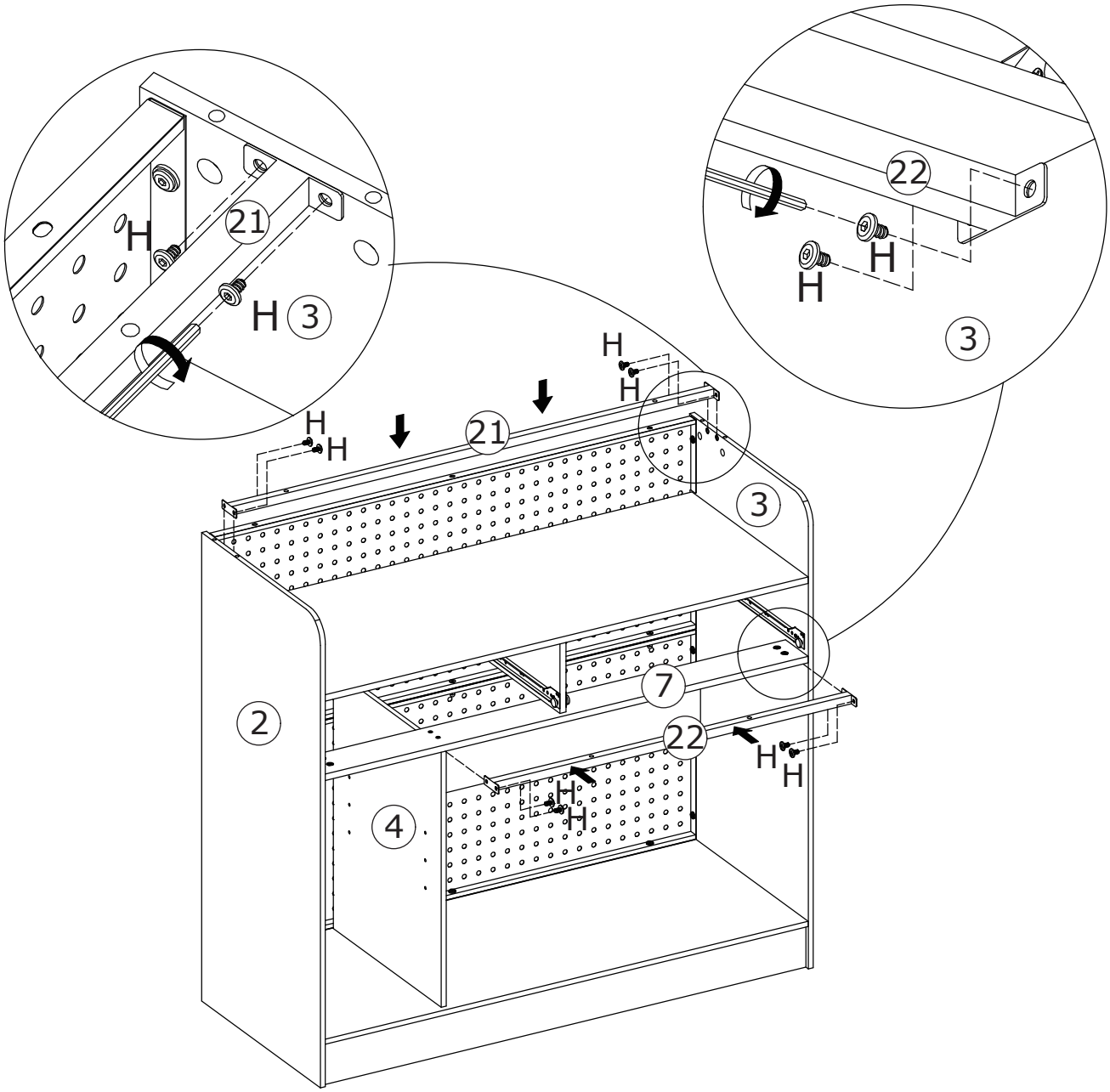

Secure part 21 to plates 2 and 3 using screw (H).
Secure part 22 to plates 3 and 4 using screws (H).

25

A x 4

M5 x 42 mm

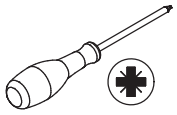

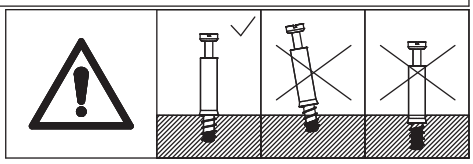

Screw eccentric rod (A) onto plate 6.

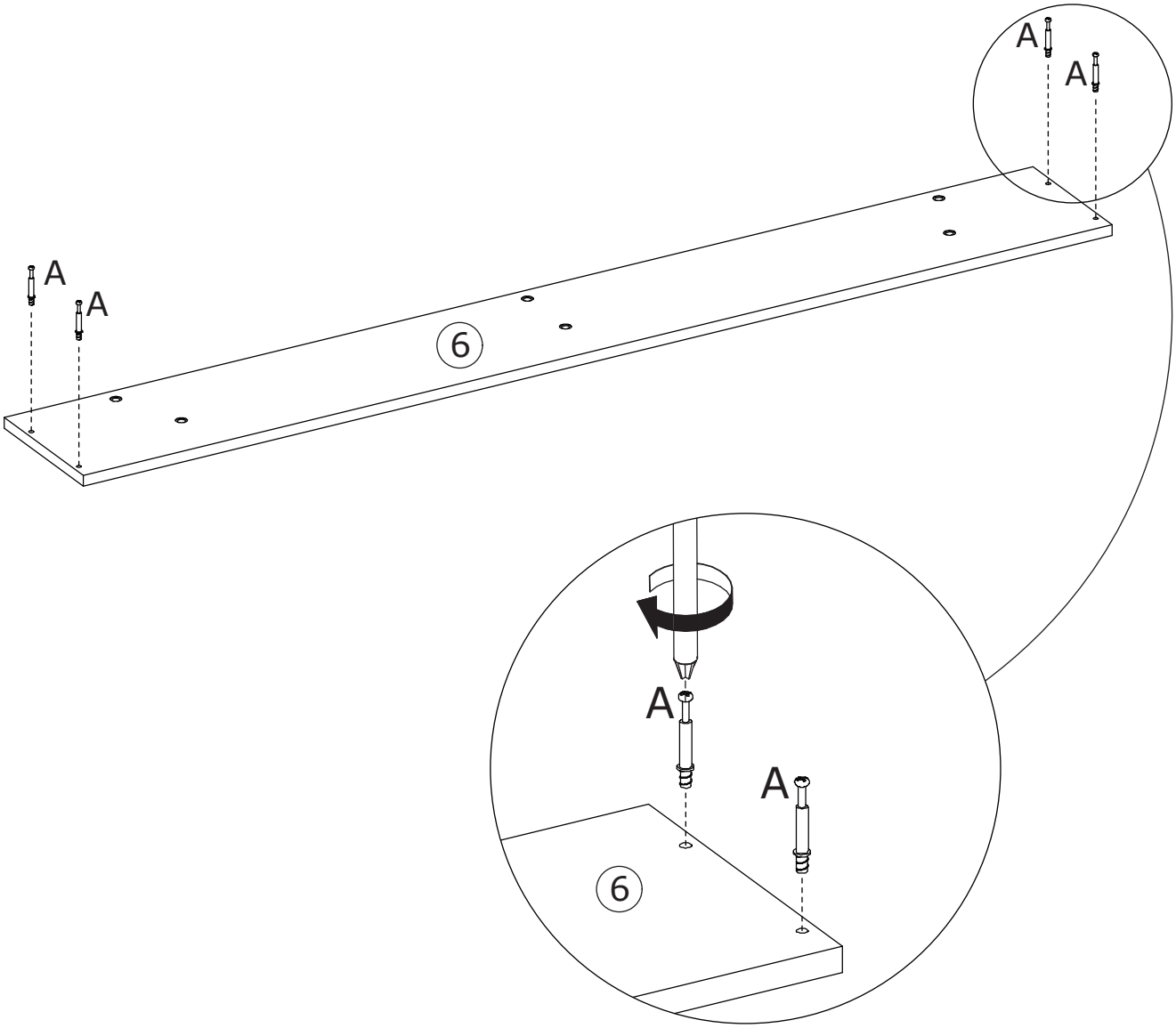

26

B x 4

∅15 x 10 mm

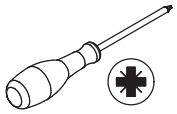

Connect plate 6 to plates 2 and 3, and tighten the eccentric pulley (B) by turning clockwise.

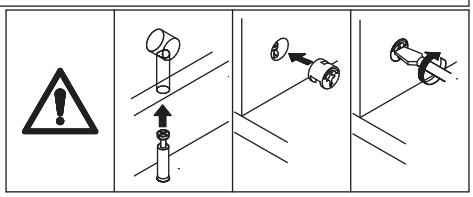

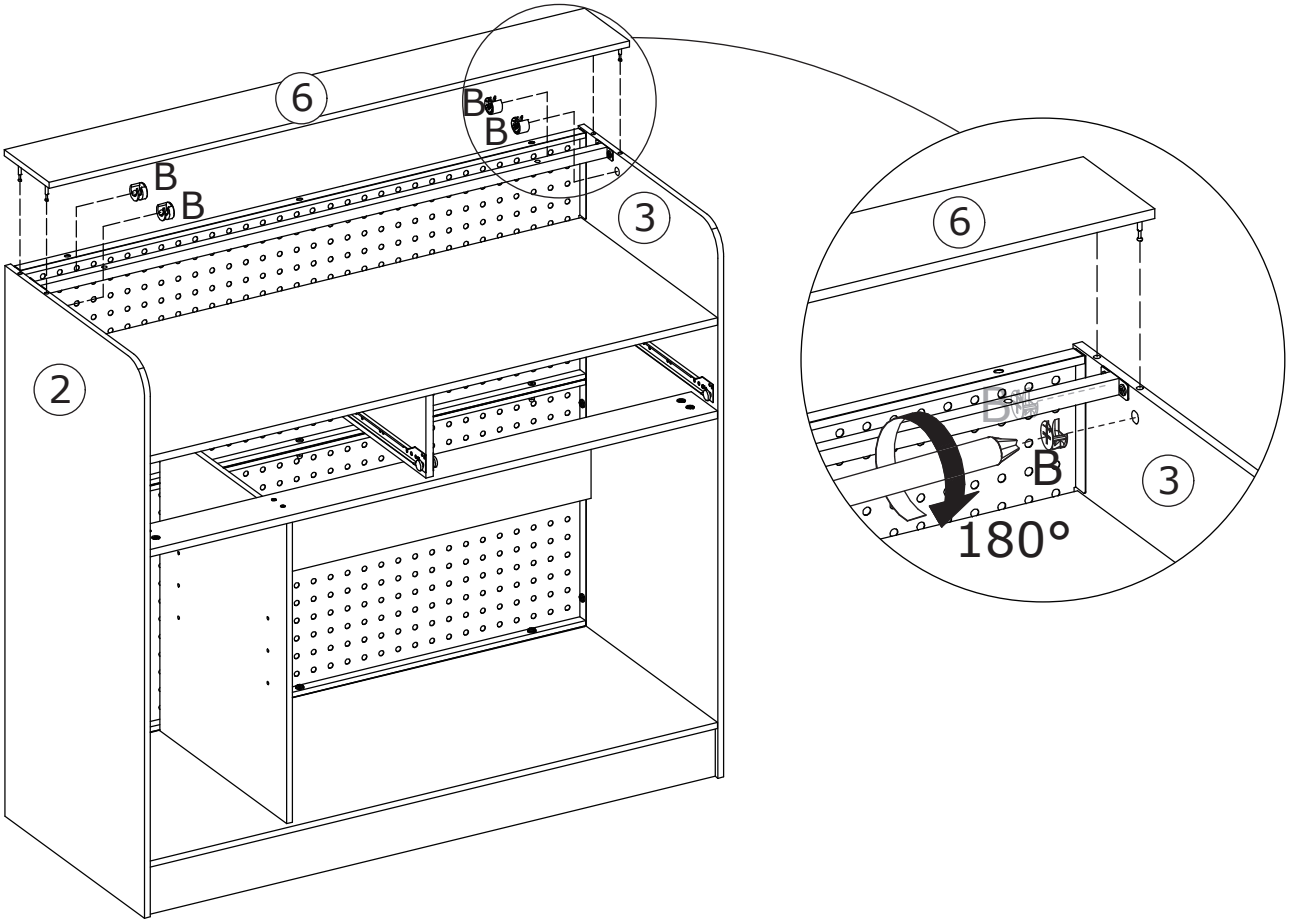

27

J x 3	K x 5	M x 3	x 1	
M6 x 20 mm	M6 x 28 mm	∅15 x 6 x 2 mm	#4	

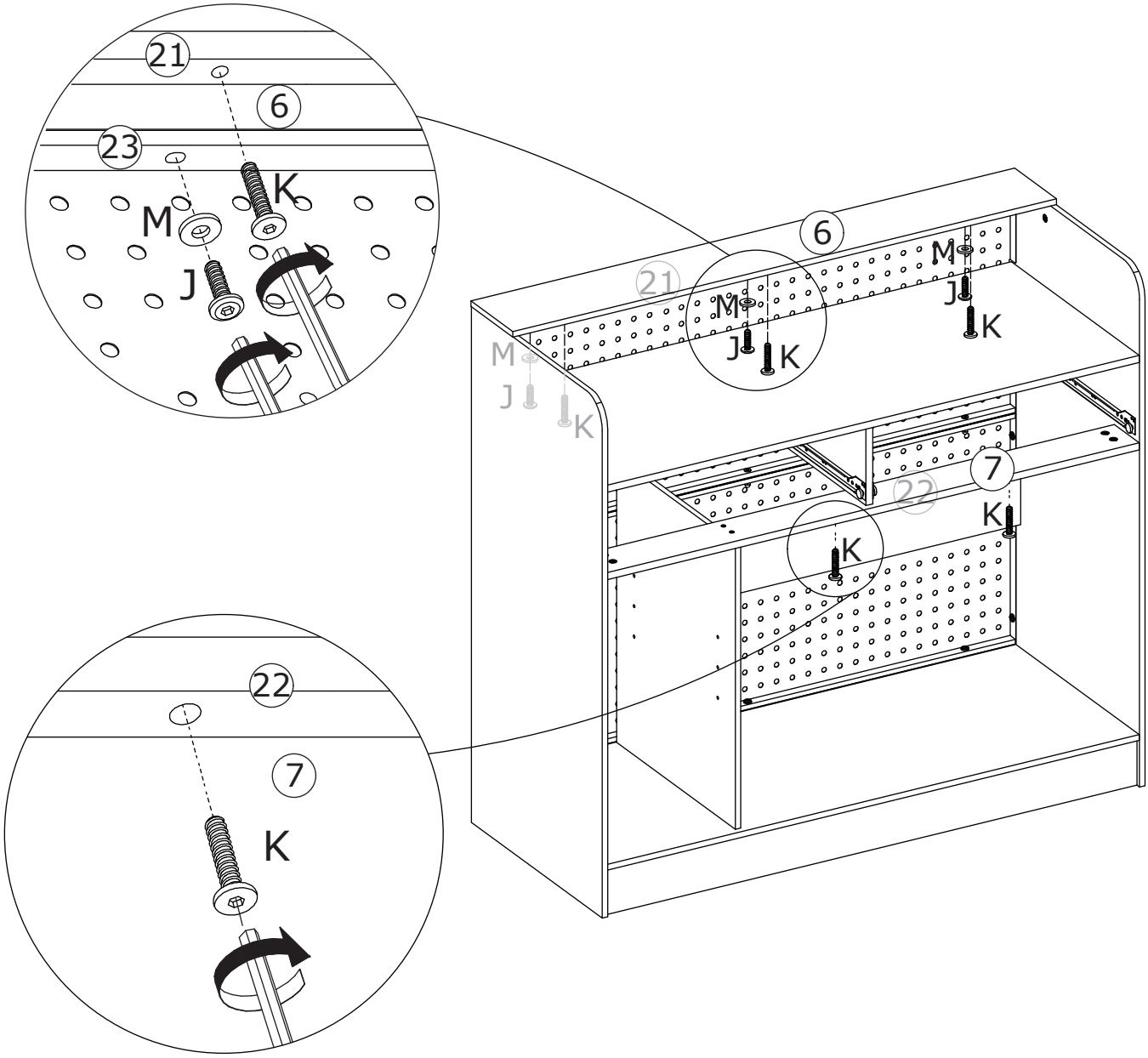

Secure part 23 to plate 6 using screw (J) and washer (M).
Secure parts 21 and 22 to plates 6 and 7 respectively using screw (K).

28

A x 4	B x 4	G x 4	
M5 x 42 mm	∅15 x 10 mm	M5 x 40 mm	

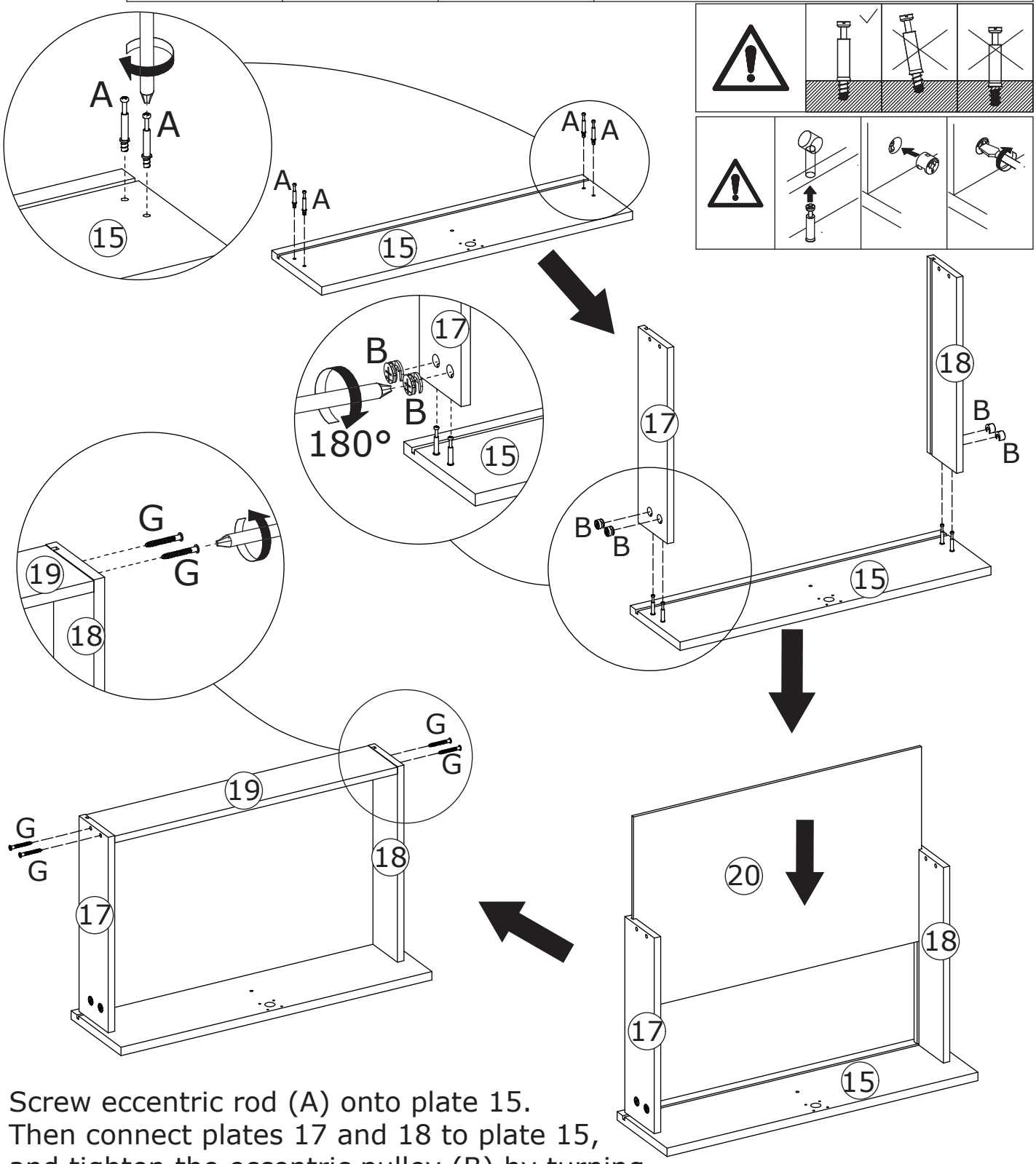

Screw eccentric rod (A) onto plate 15.
Then connect plates 17 and 18 to plate 15, and tighten the eccentric pulley (B) by turning clockwise.
Slide plate 20 into the available slots, secure plate 19 to plates 17 and 18 with screw (G).

29

D x 4

M3.5 x 12 mm

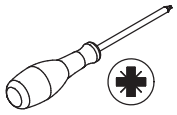

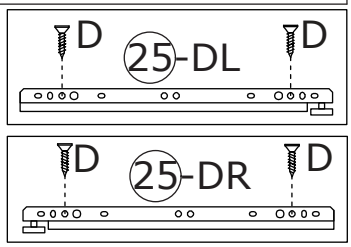

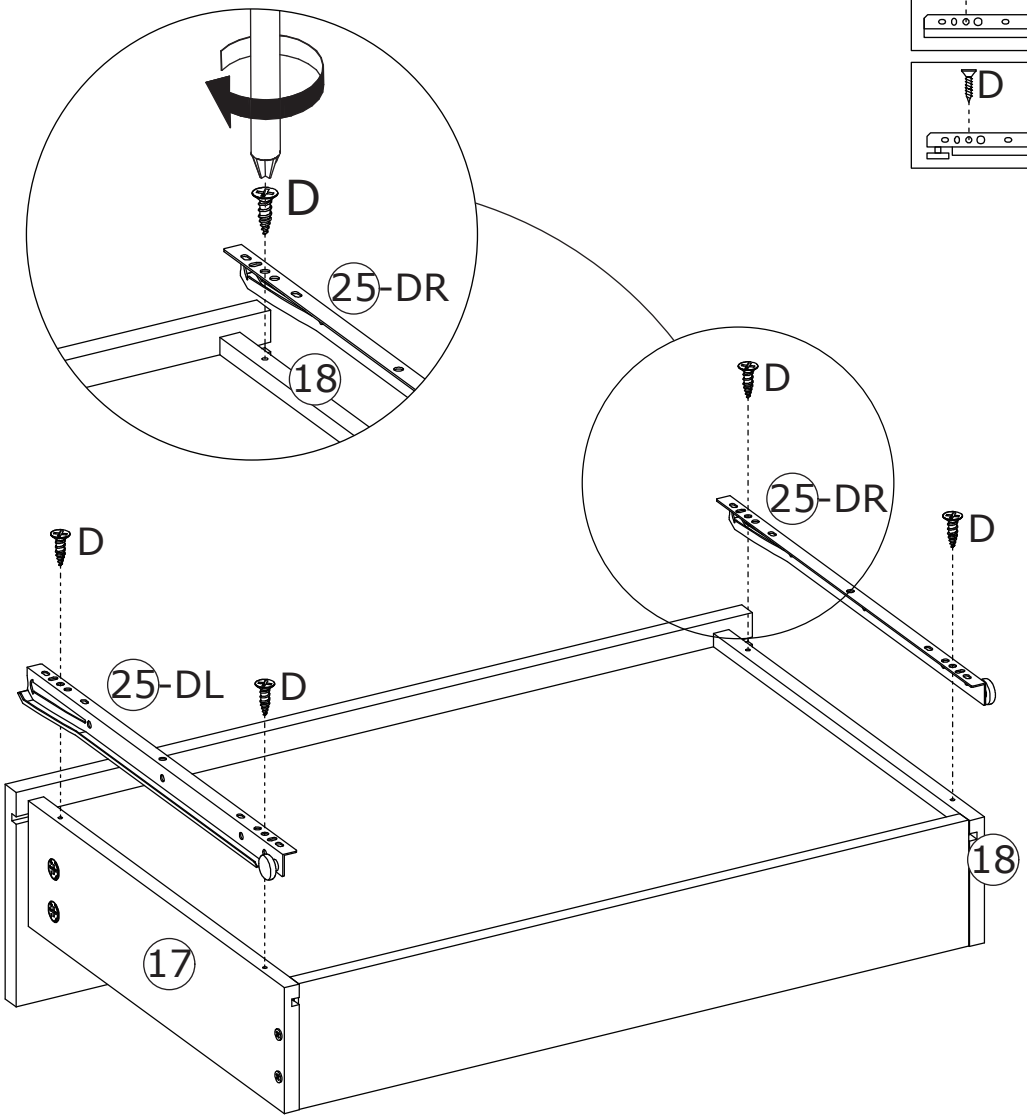

Secure slide rail (25-DR) and (25-DL) to plates 17 and 18 respectively using screw (D).

30

E x 4	F x 1	P x 1	Q x 1	
				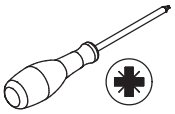
M3.5 x 18 mm	M4 x 18 mm		113	

Secure lock (P) to plate 15 using screw (E).
Secure knob (Q) to plate 15 using screw (F).

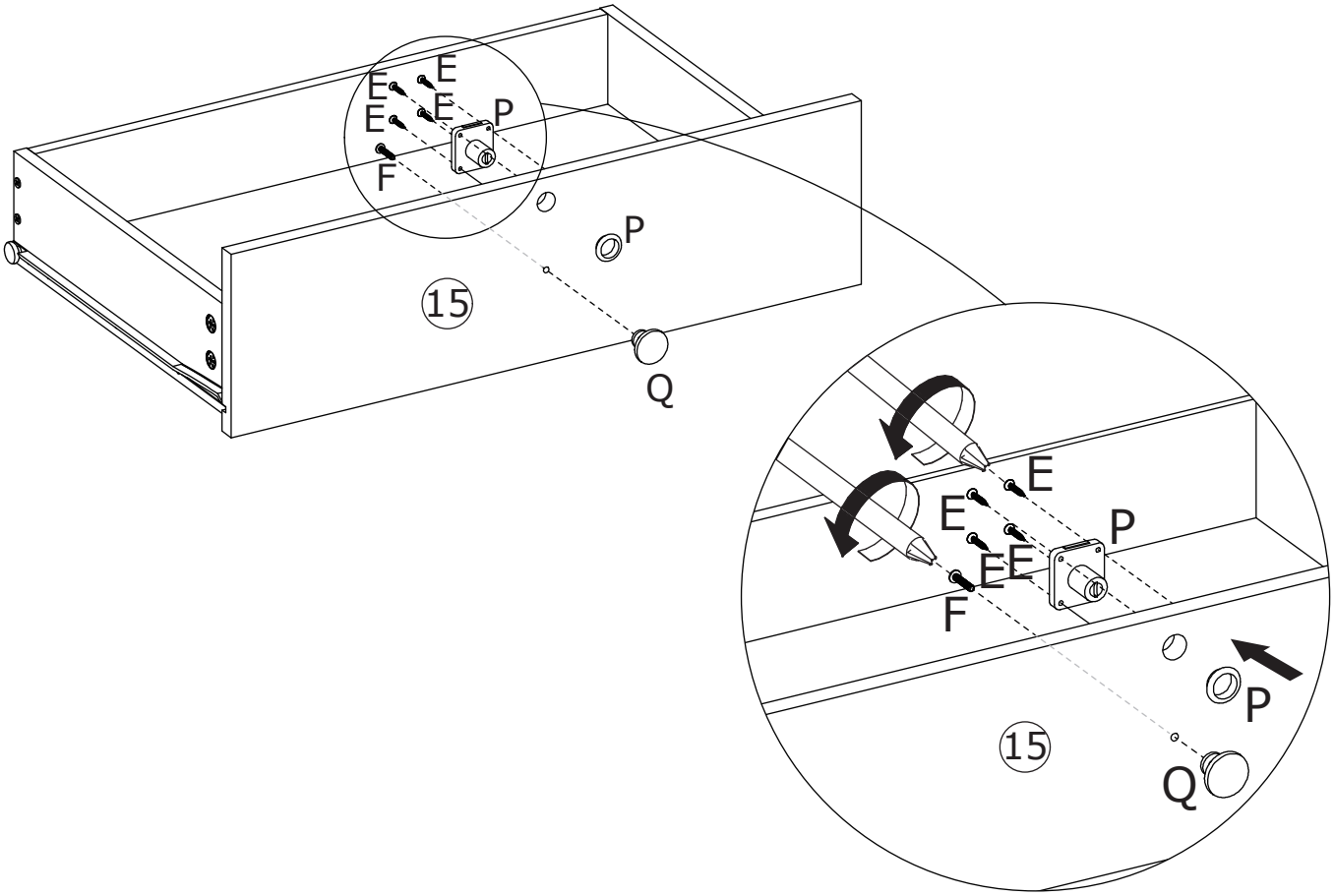

31

A x 4	B x 4	G x 4	
M5 x 42 mm	∅15 x 10 mm	M5 x 40 mm	

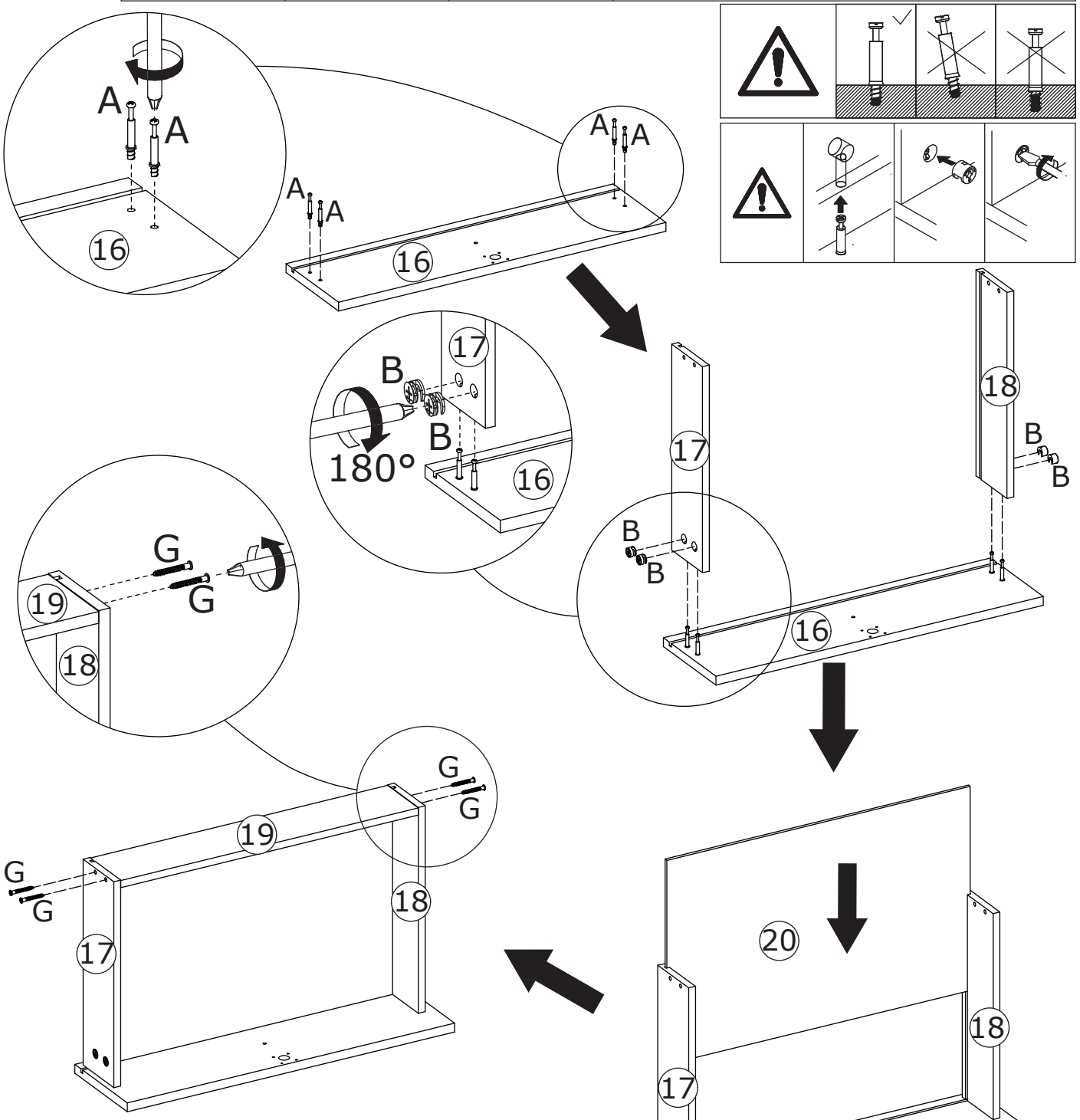

Screw eccentric rod (A) onto plate 16.
Then connect plates 17 and 18 to plate 16, and tighten the eccentric pulley (B) by turning clockwise.
Slide plate 20 into the available slots, secure plate 19 to plates 17 and 18 with screw (G).

32

D x 4

M3.5 x 12 mm

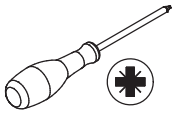

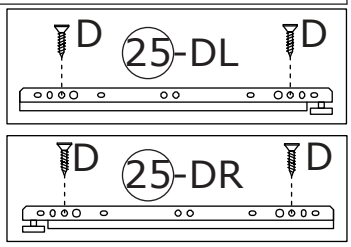

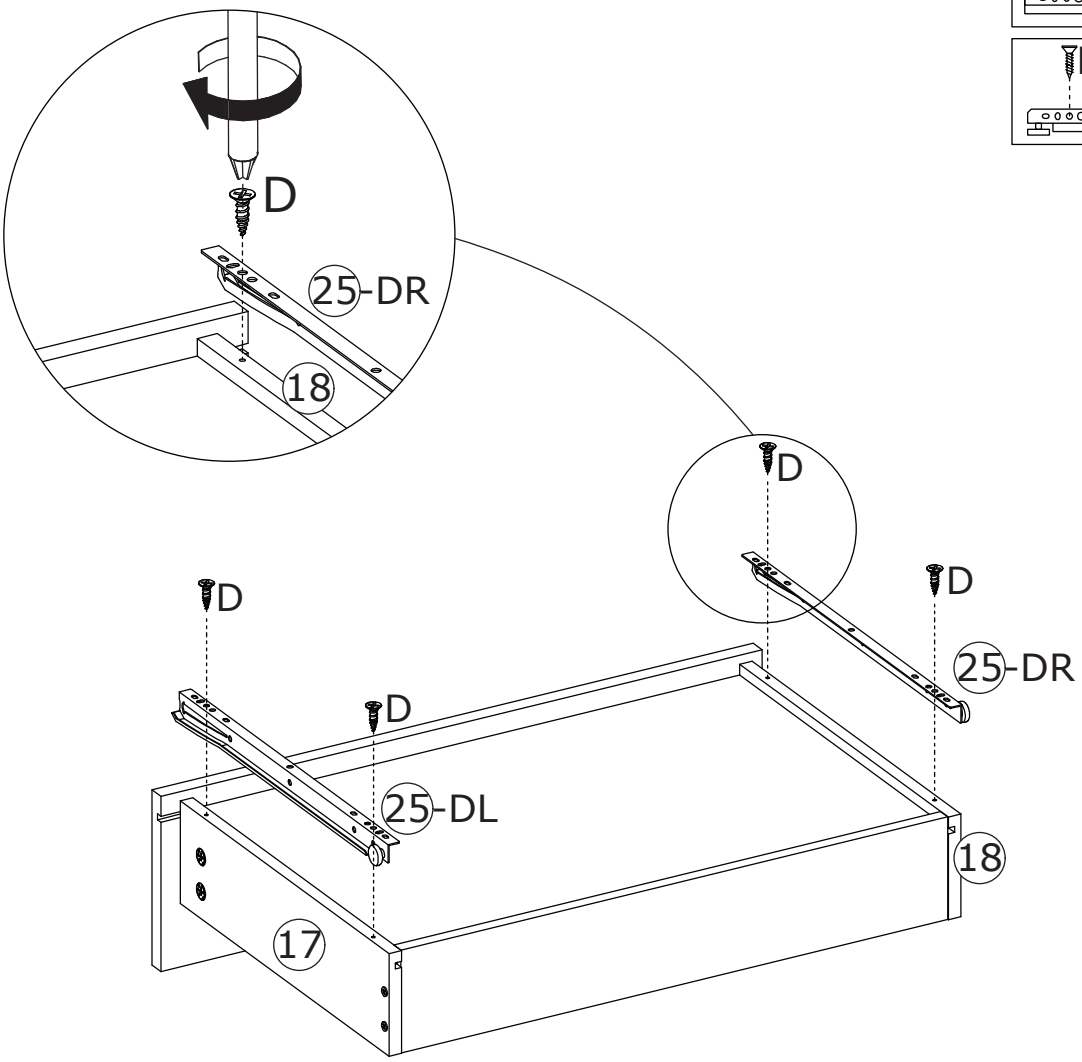

Secure slide rail (25-DR) and (25-DL) to plates 17 and 18 respectively using screw (D).

33

E x 4	F x 1	P x 1	Q x 1	
				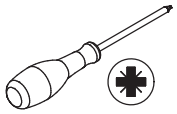
M3.5 x 18 mm	M4 x 18 mm		113	

Secure lock (P) to plate 16 using screw (E).
Secure knob (Q) to plate 16 using screw (F).

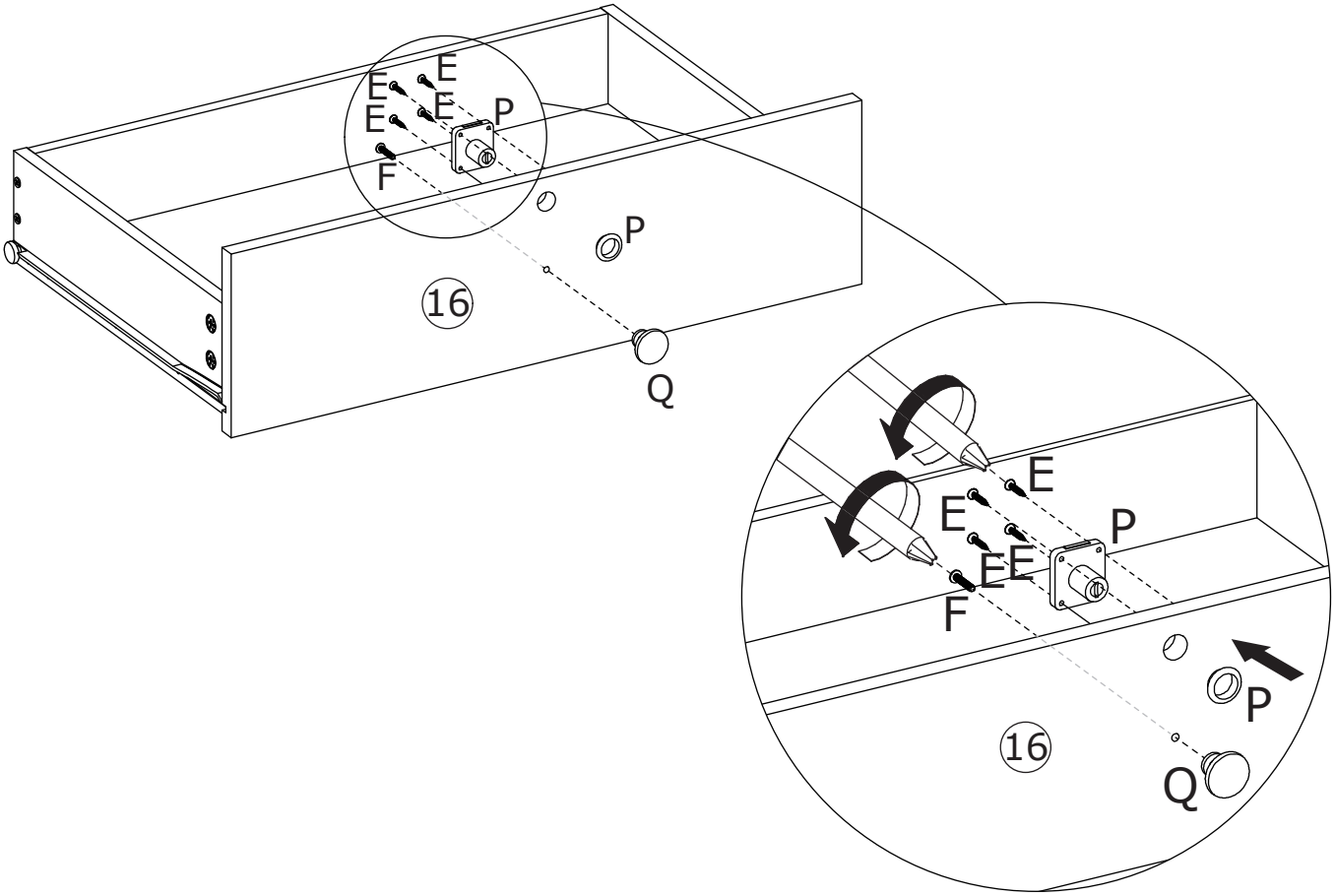

34

R x 4 ∅6	

As shown in the figure, push the drawers into the modular unit. Insert fitting (R) into the center of plates 2 and 4, then place plate 13 onto position.

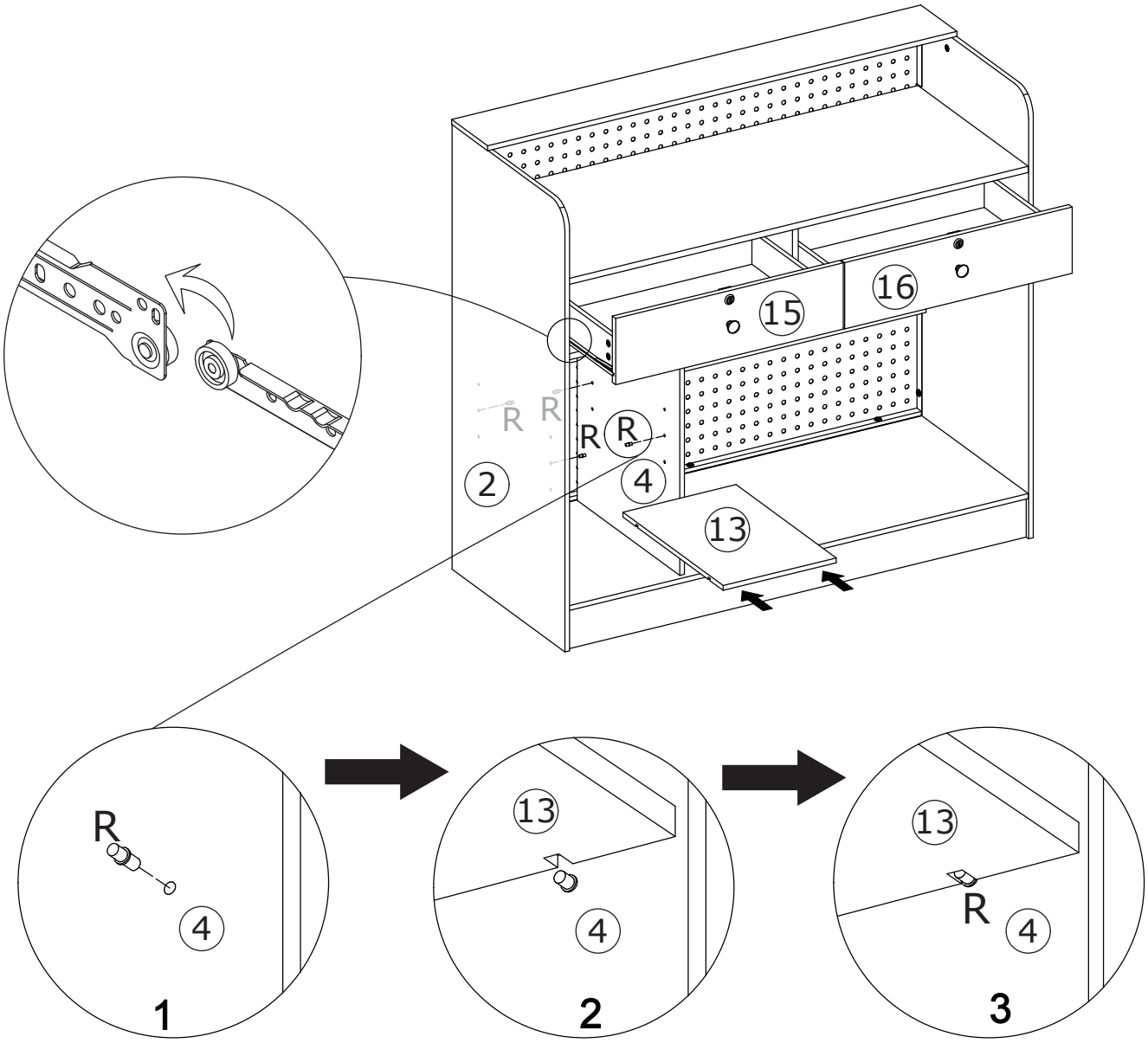

35

D x 4	N x 2	
	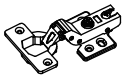	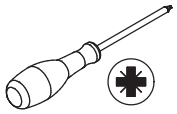
M3.5 x 12 mm	∅35 mm	

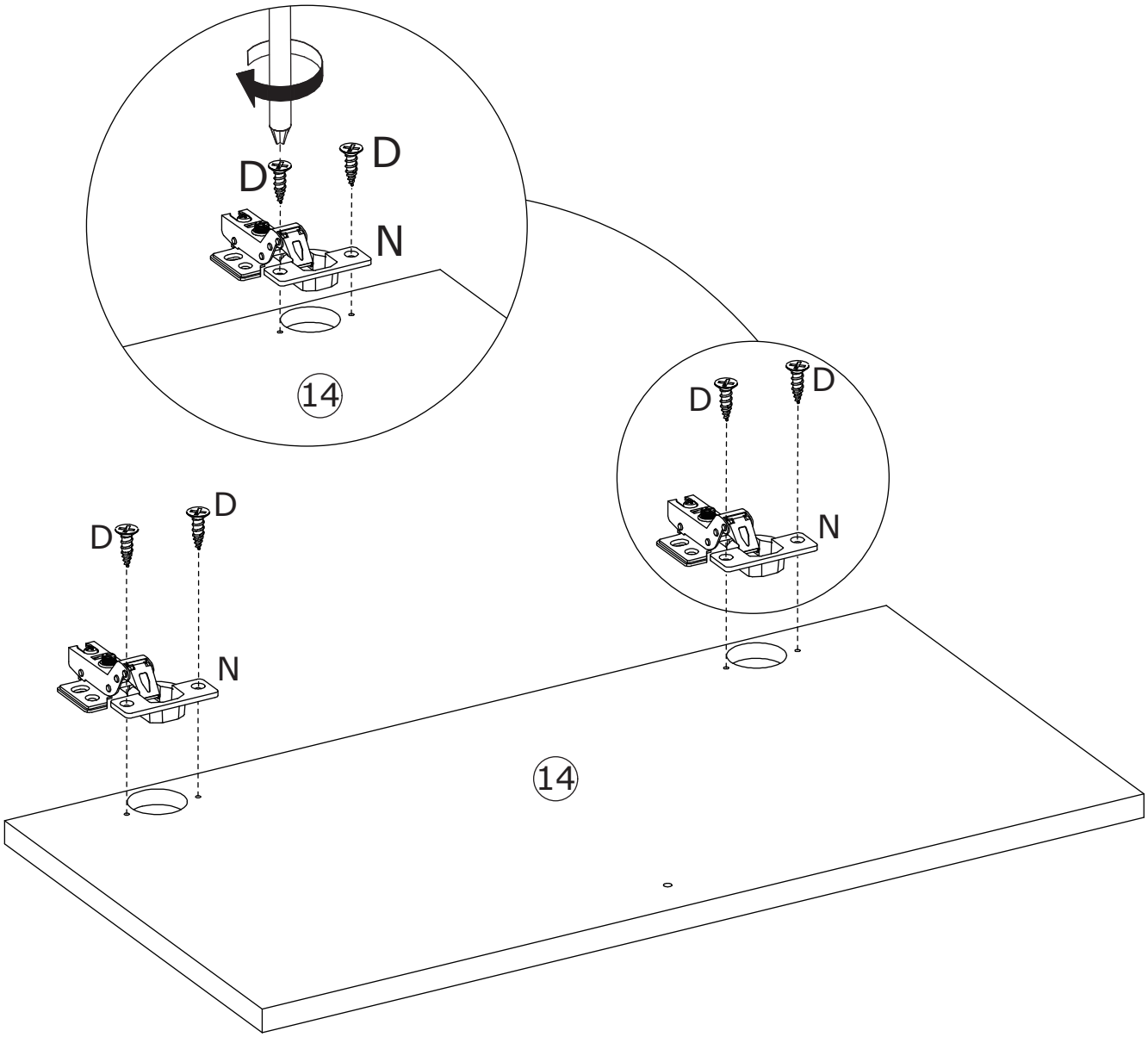

Secure hinge (N) to plate 14 using screw (D).

36

D x 8

M3.5 x 12 mm

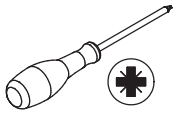

Secure door plate 14 to plate 2 using screw (D).

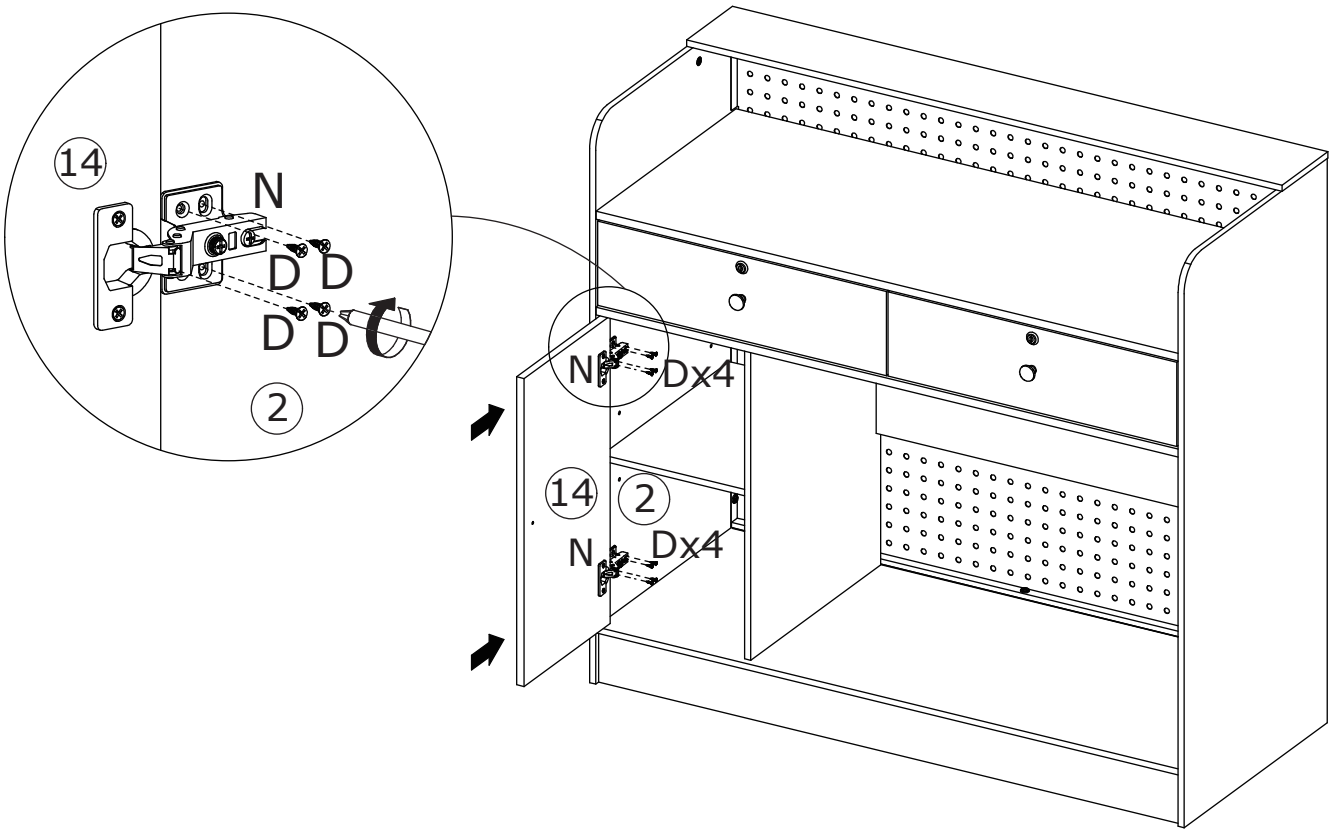

37

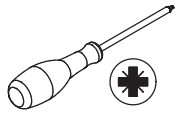

If doors are still not aligned if the hinges
are properly installed, please watch the video.

https://youtu.be/n0Lb36SoODM

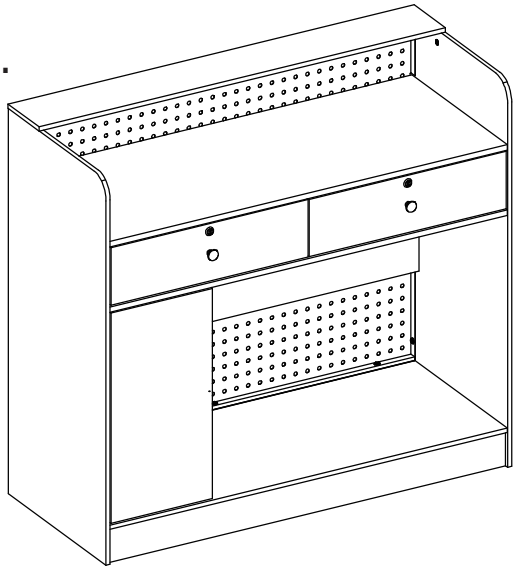

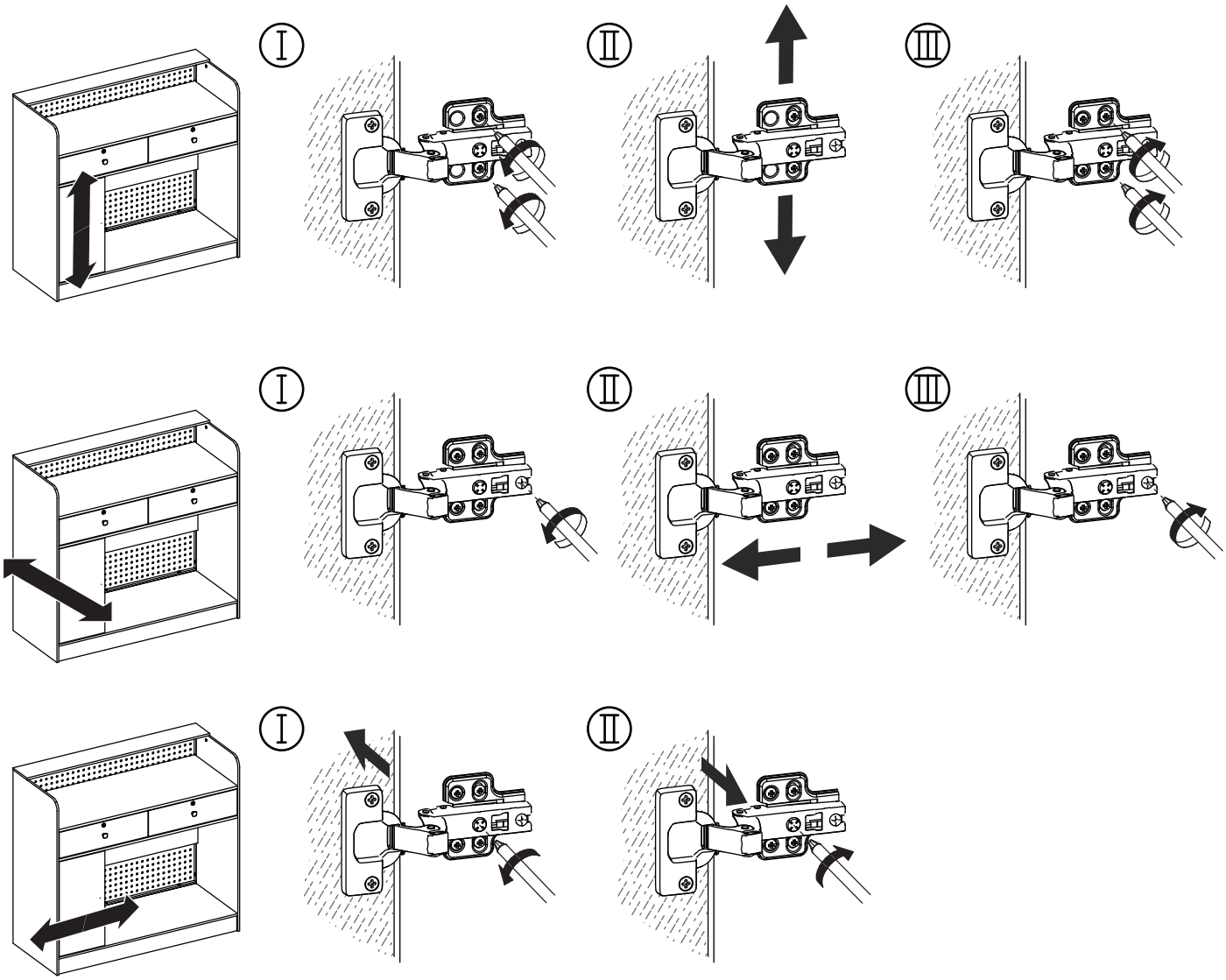

38

F x 1	Q x 1	
		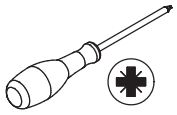
M4 x 18 mm	113	

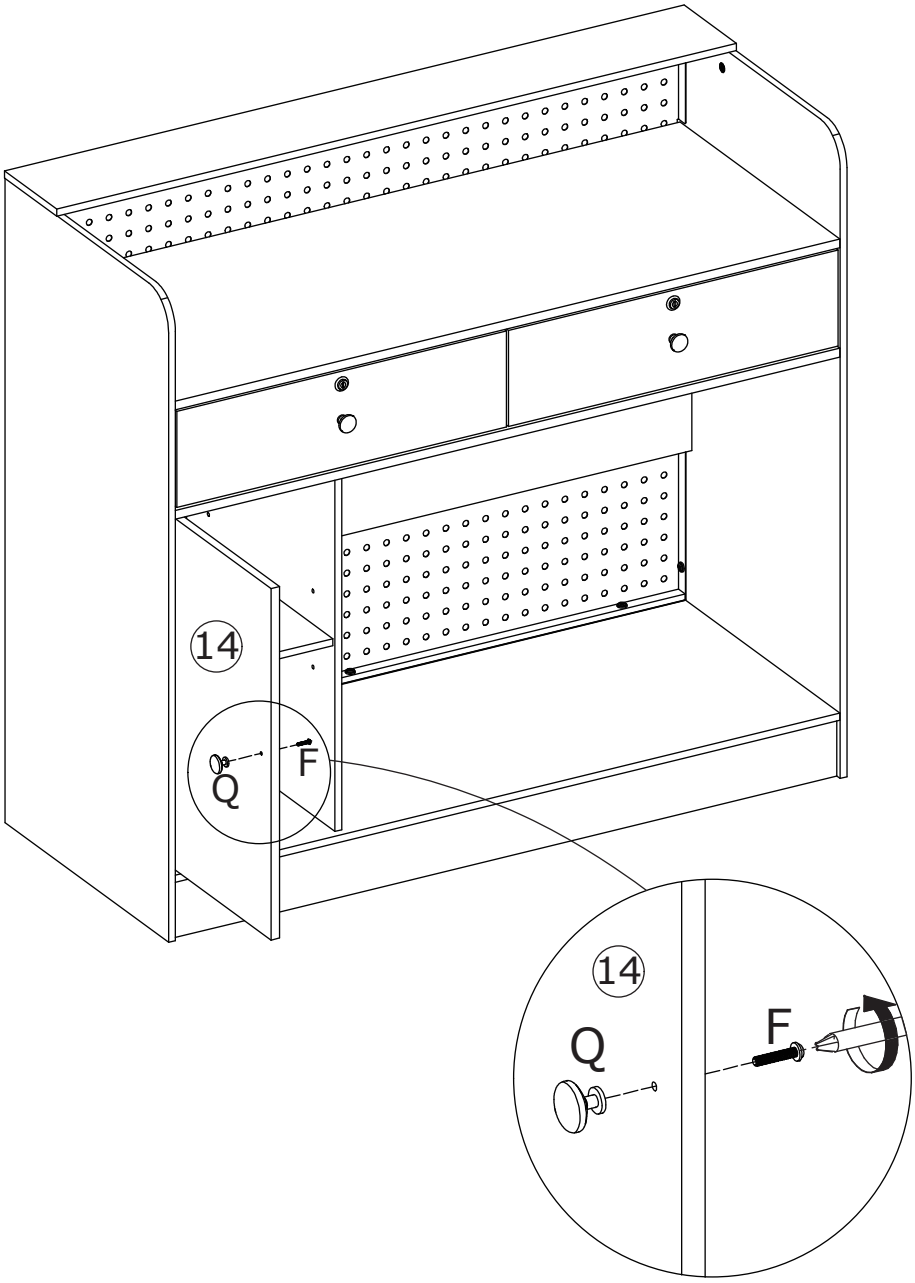

Secure knob (Q) to plate 14 using screw (F).

39

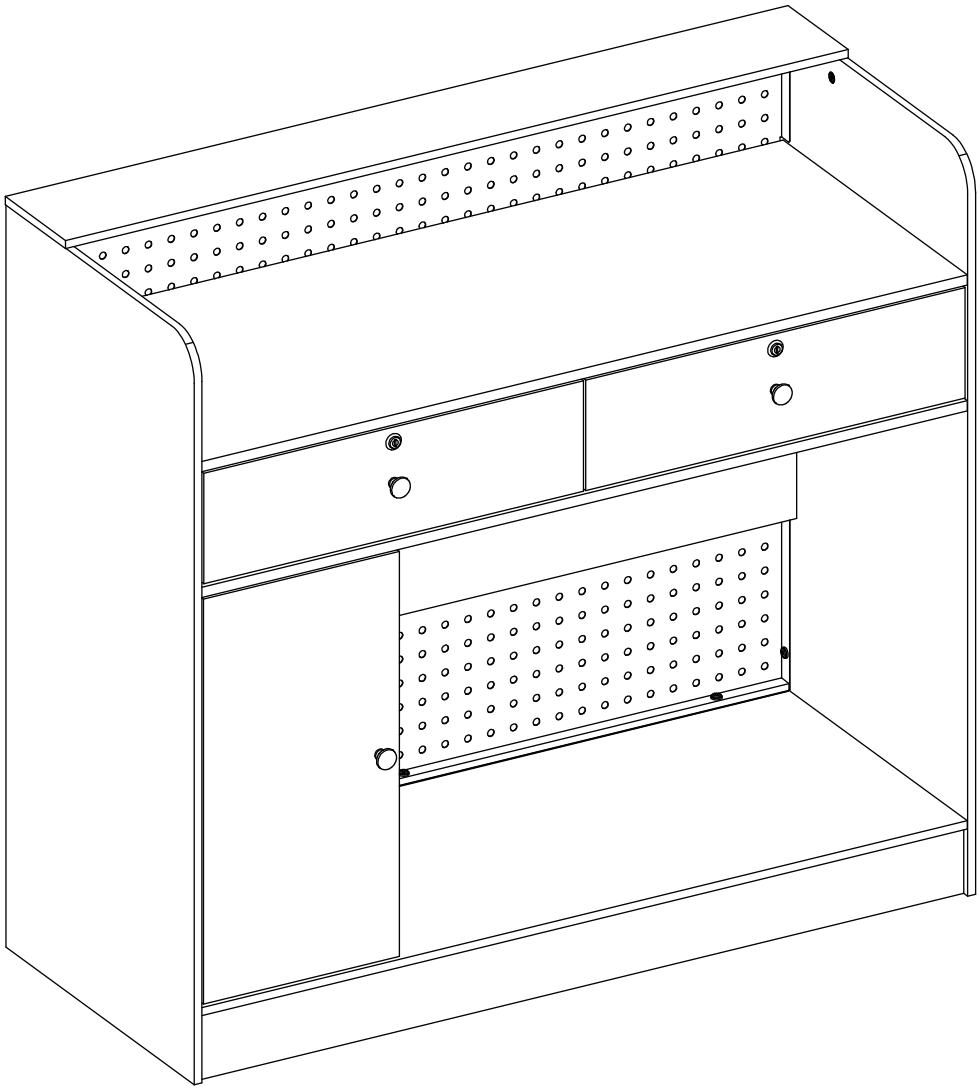

WARRANTY

WARRANTY CLAIMS

•There is a 30-day warranty for broken furniture or any other problems that do not work properly. The warranty will start from the date of purchase which must be verified by proof of purchase.

•Before making a claim, we may be able to answer your query, simply call us. Please leave your purchase order number, along with some details of the problem, if you want a replacement part. We will arrange within 48 hours. If there is out of stock, we will reply with a shipping date.

•The product must be used in accordance with the instructions provided. For health reasons.

•For other reasons, if the furniture needs to be returned, it must be cleaned and dried and operated within 30 days of receipt.

Type of Warranty Claim

•Failure to follow the furniture instructions will invalidate the warranty. Attention please.

•Does not include damage during installation, but includes damage during transportation.

Scope of responsibility

•Shall not bear any responsibility for misuse or user damage and / or loss of parts during the installation of furniture.

•After using, the damage and scratches of the furniture are not covered by the warranty.

The Warranty Relates to All Bought in The Us and Covers The Following Areas

•Sheet parts: 1 month from the date of purchase.

•Electrical parts: 1 month from the date of purchase.

RETURNS

CHANGED YOUR MIND AND NEED TO RETURN YOU ITEM?

PLEASE FOLLOW THE BELOW INSTRUCTIONS:

- If you have purchased and have simply changed your mind, follow the retailer's instructions for returns.

DEFECTIVE ITEMS

- If your item is defective in any way, i.e. it doesn't work but you can't identify why, in the first instance, please call us.

DAMAGED ITEMS

- If you receive an order with obvious shipping damage from the retailer, then we suggest the delivery is refused. If the delivery has been accepted and then shipping damage is found, please follow the specific instructions advised by the retailer.
  In all circumstances please save all packaging material and paperwork for the order. Please be aware that if you dispose of packaging material or attempt to return the merchandise without contacting the fulfiller, you jeopardise your chances of making a claim, and you may not receive a credit for the return.

AFTER-SALES CONTACT

adelahu@fufugaga.com

208-820-0068