# Owner Manual

# WOOD PLANTER BENCH

59.06’L X 11.81”W X15.75”H

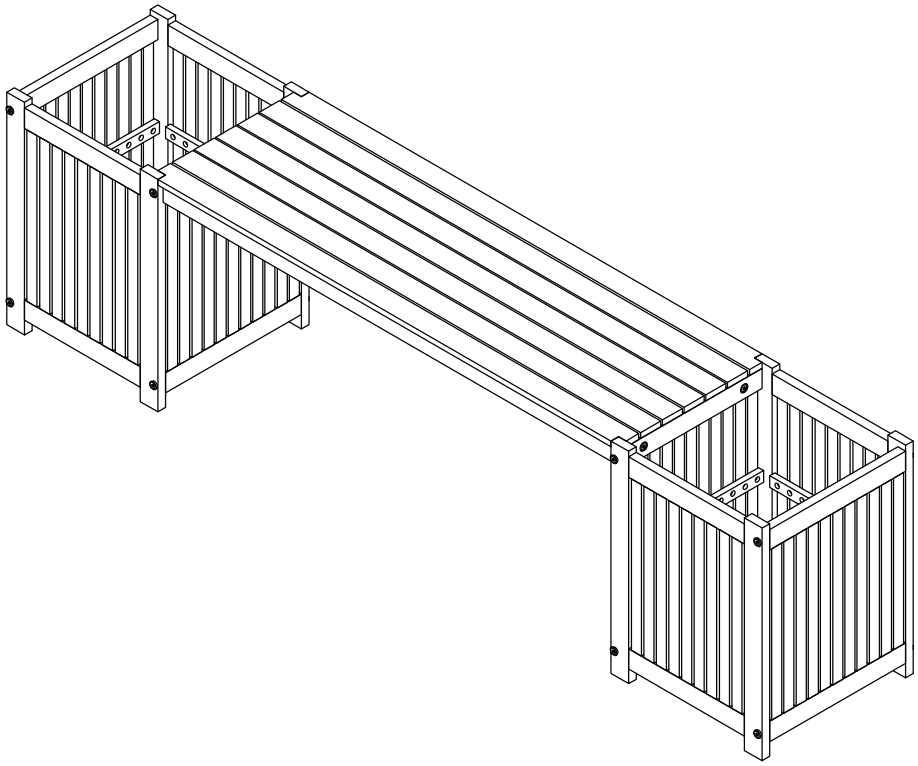

## Customer Service

If you have any questions about assembly or possible missing parts,please contact us and we will be glad to assist you. Contact us through our website.

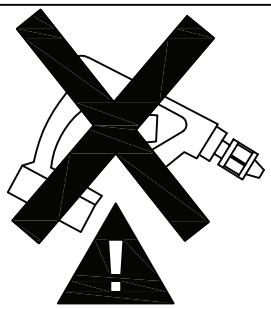

**. Use of power tool to assemble this product will invalidate any claim and damage this product making it unsafe !!!**
**. Please assemble on a clean soft surface to avoid damage.**

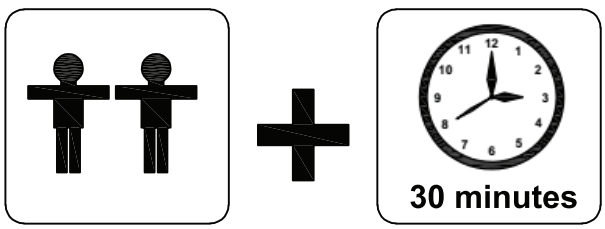


**Tools Required**

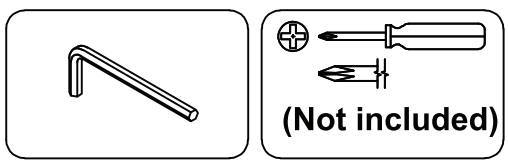

# Part list-Wood Planter Bench

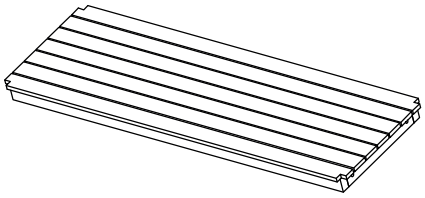

A x 1 PC

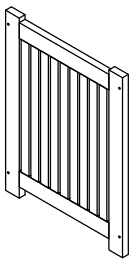

B X 4 PCS

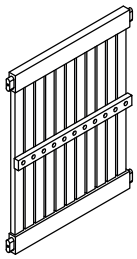

C X 4 PCS

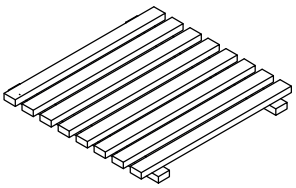

D X 2 PCS

**Identifying the hardware**-Identify the hardware using the illustrations below

| | | |
|---|---|---|
| ① | 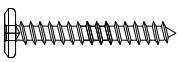 M6 x 40mm | 16 |
| ② |  M6 x 30mm | 4 |
| ③ |  M6 x 15mm | 4 |
| ④ |  M4 | 2 |

# Step 01

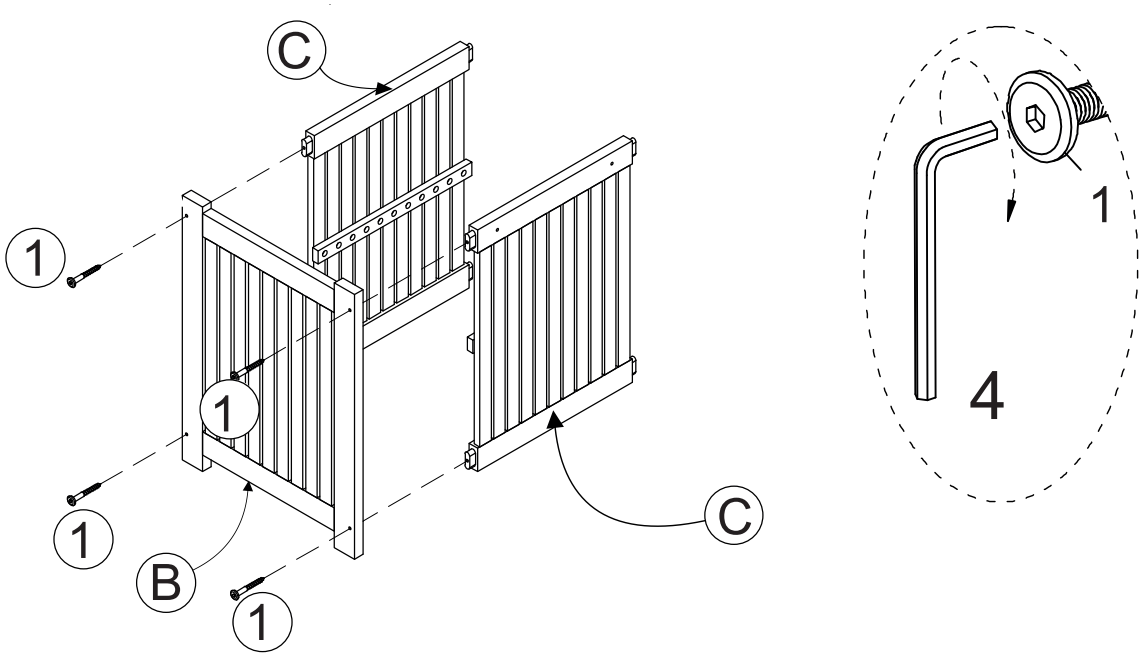


# Step 02

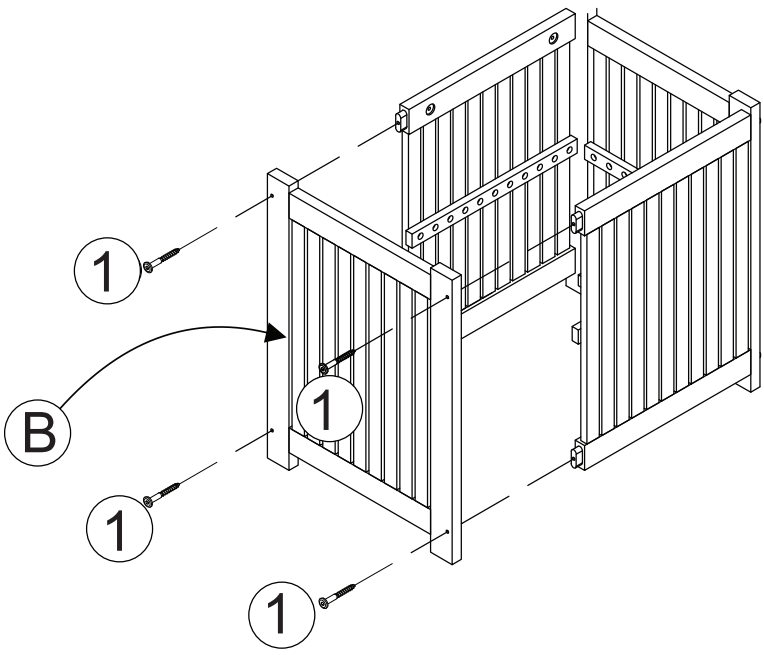

# Step 03

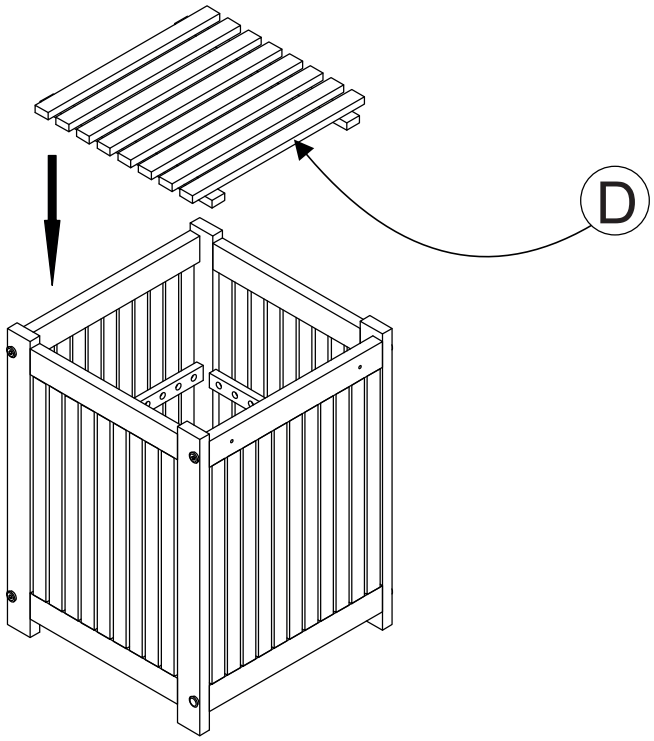


# Step 04

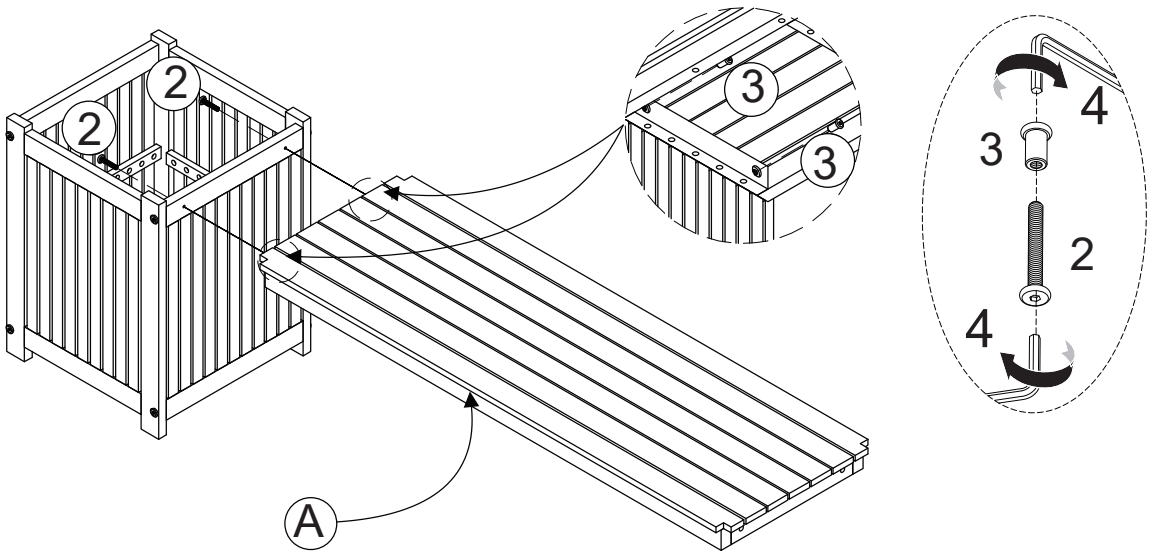

# Step 05

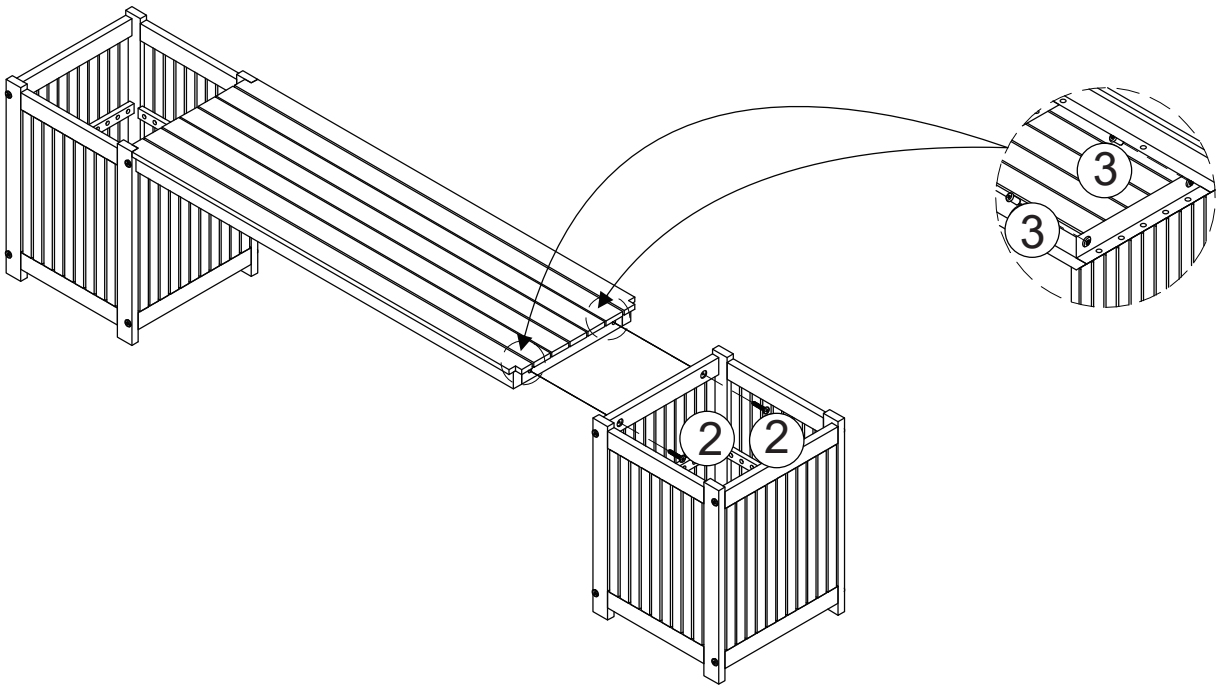


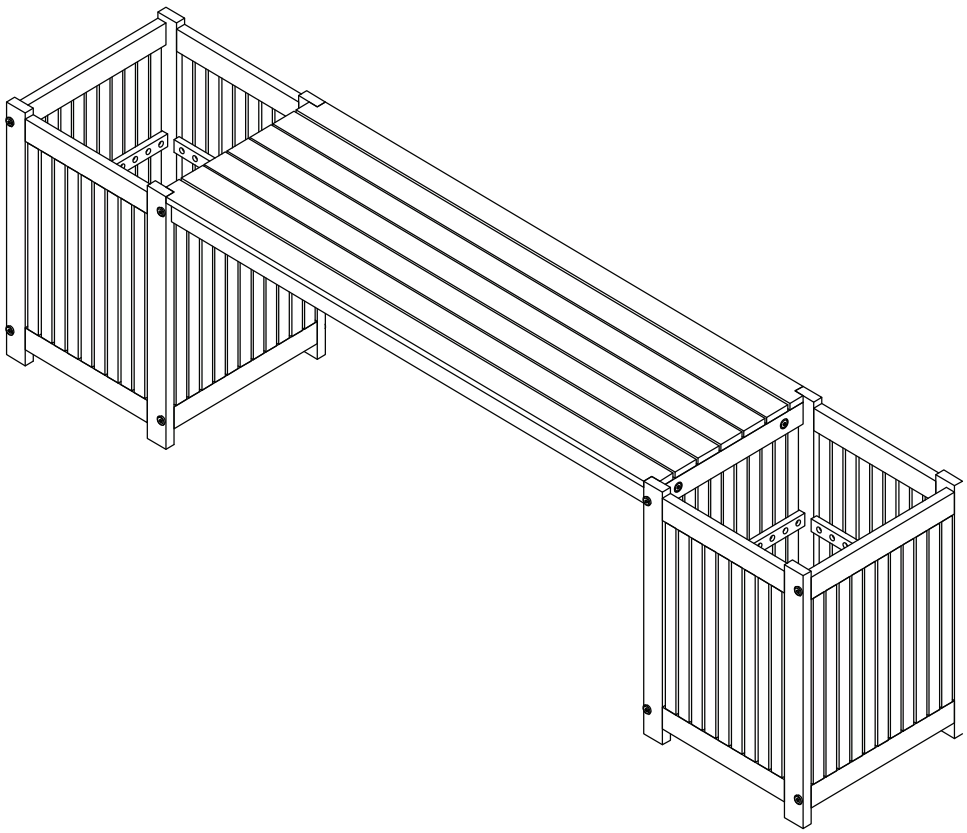

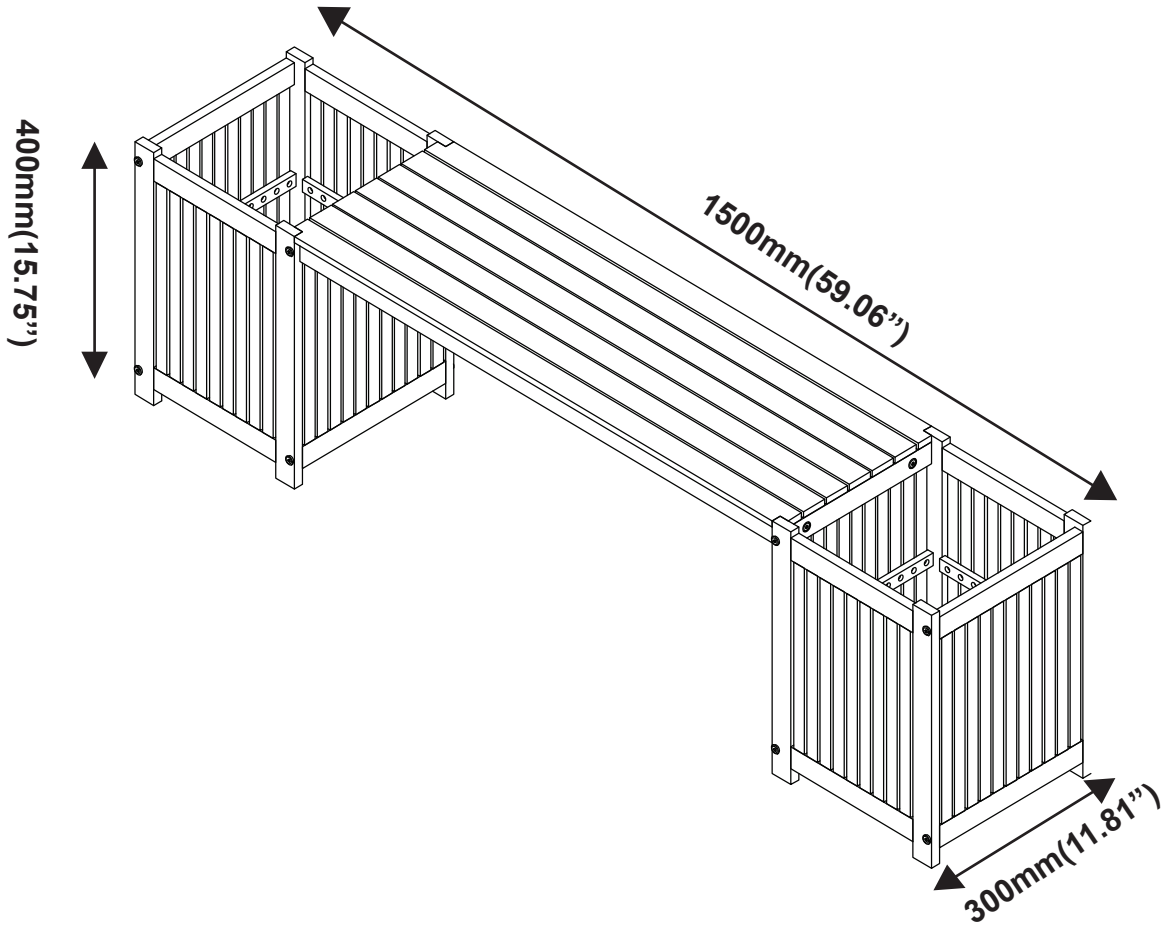


## Care & Maintenance

**While weathering and color variation over time is natural for outdoor wood furniture, we recommend the following care and maintenance for best results:**

**.Store wood furniture indoors out of season. Make sure furniture is completely dry before storage.**

**.Cover wood furniture with outdoor covers when left outside during inclement weather or when not in use.**

**.Wipe spills with a clean dry cloth.**

**.Avoid the use of harsh cleaners and abrasives. Do not power wash.**

**.Use Teak Oil to protect from sun and weather exposure. This will require light sanding. Use a natural bristle brush or lint free cloth to apply the oil. Usually, oil should be reapplied every two to three months. Before each application, clean thoroughly and make sure your furniture is completely dry.**

**.Inspect your furniture every three to six months. Tighten any loose fittings or bolts as required.**