Assembly Instructions

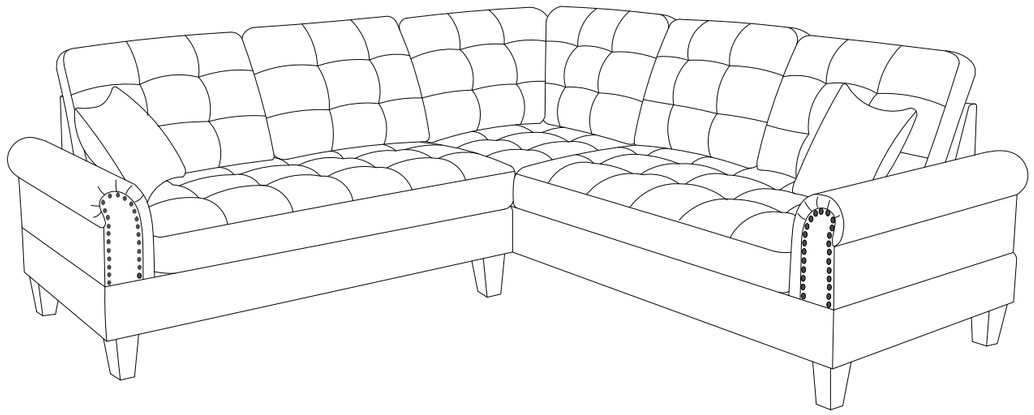

PARTS LIST

BOX-1

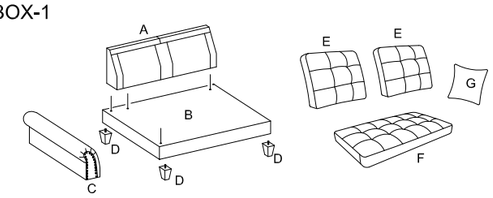

BOX-2

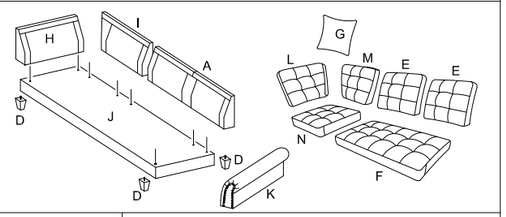

1	x 12	2	x 12	3	x 12
4	x 12	5	x 2	6	x 8

BEFORE ASSEMBLY

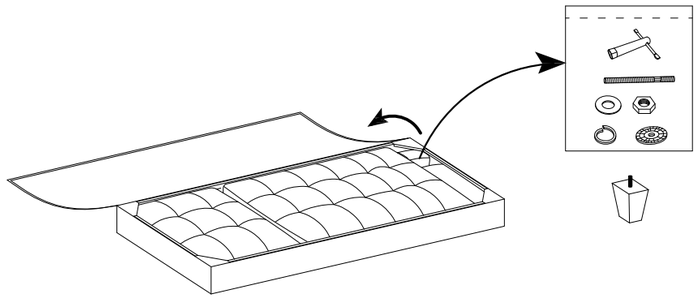

Open up the Velcro of Non-Woven Fabric cover on the bottom of the seat frame to remove seat cushions,back cushions and pillow.

*****PLEASE REMOVE ALL PARTS FROM SEAT FRAMES AND BACKS BEFORE ASSEMBLY*****

LOVESEAT ON THE LEFT

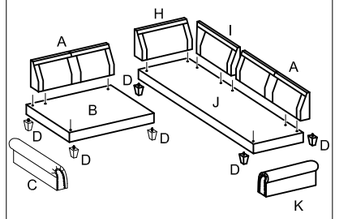

LOVESEAT - BOX 1

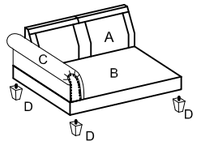

SOFA - BOX 2

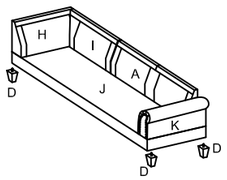

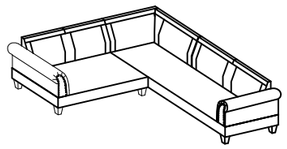

LOVE SEAT ASSEMBLY INSTRUCTION - BOX 1

STEP 1- INSERT THREADED RODS INTO SEAT BACKS

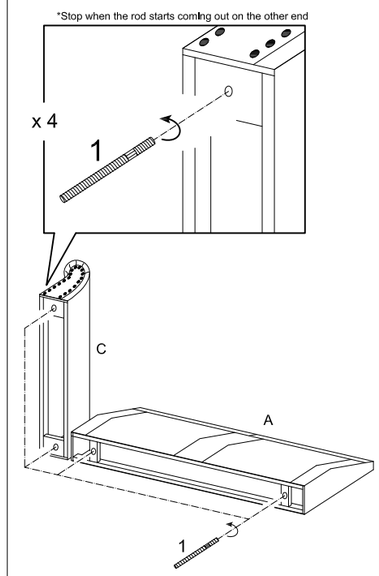

STEP 2- MOUNT SEAT BACKS INTO THE SEAT FRAME

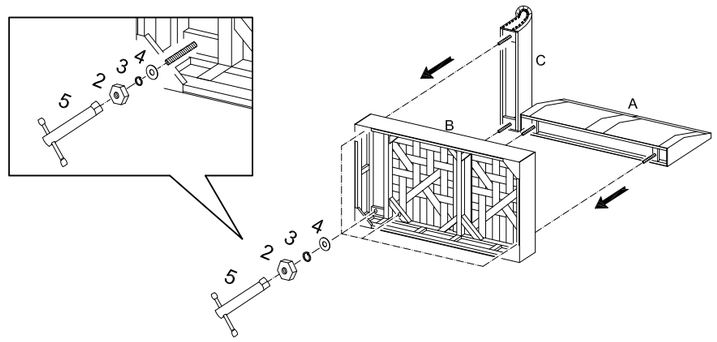

STEP 3- PUT BACK THE FABRIC COVER AND INSERT LEGS

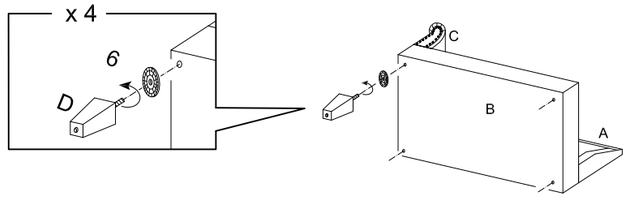

SOFA ASSEMBLY INSTRUCTION - BOX 2

STEP 1- INSERT THREADED RODS INTO SEAT BACKS

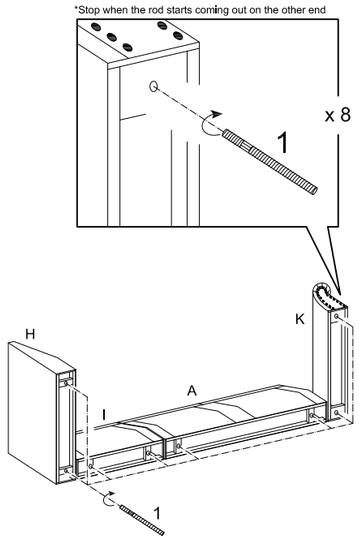

STEP 2- MOUNT SEAT BACKS INTO THE SEAT FRAME

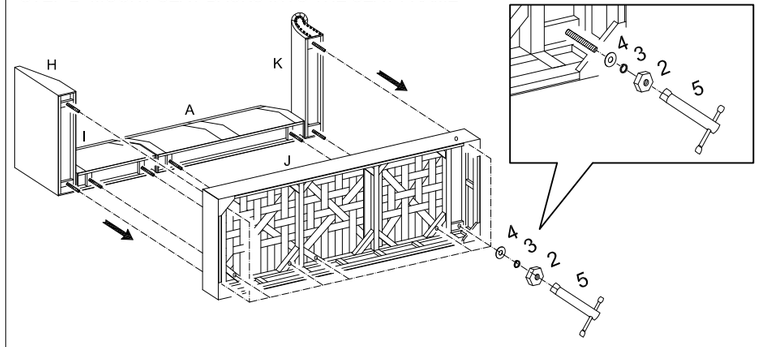

STEP 3- PUT BACK THE FABRIC COVER AND INSERT LEGS

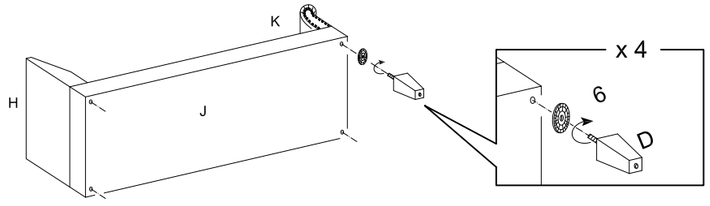

OPTIONAL: LOVE SEAT + SOFA (SECTIONAL)

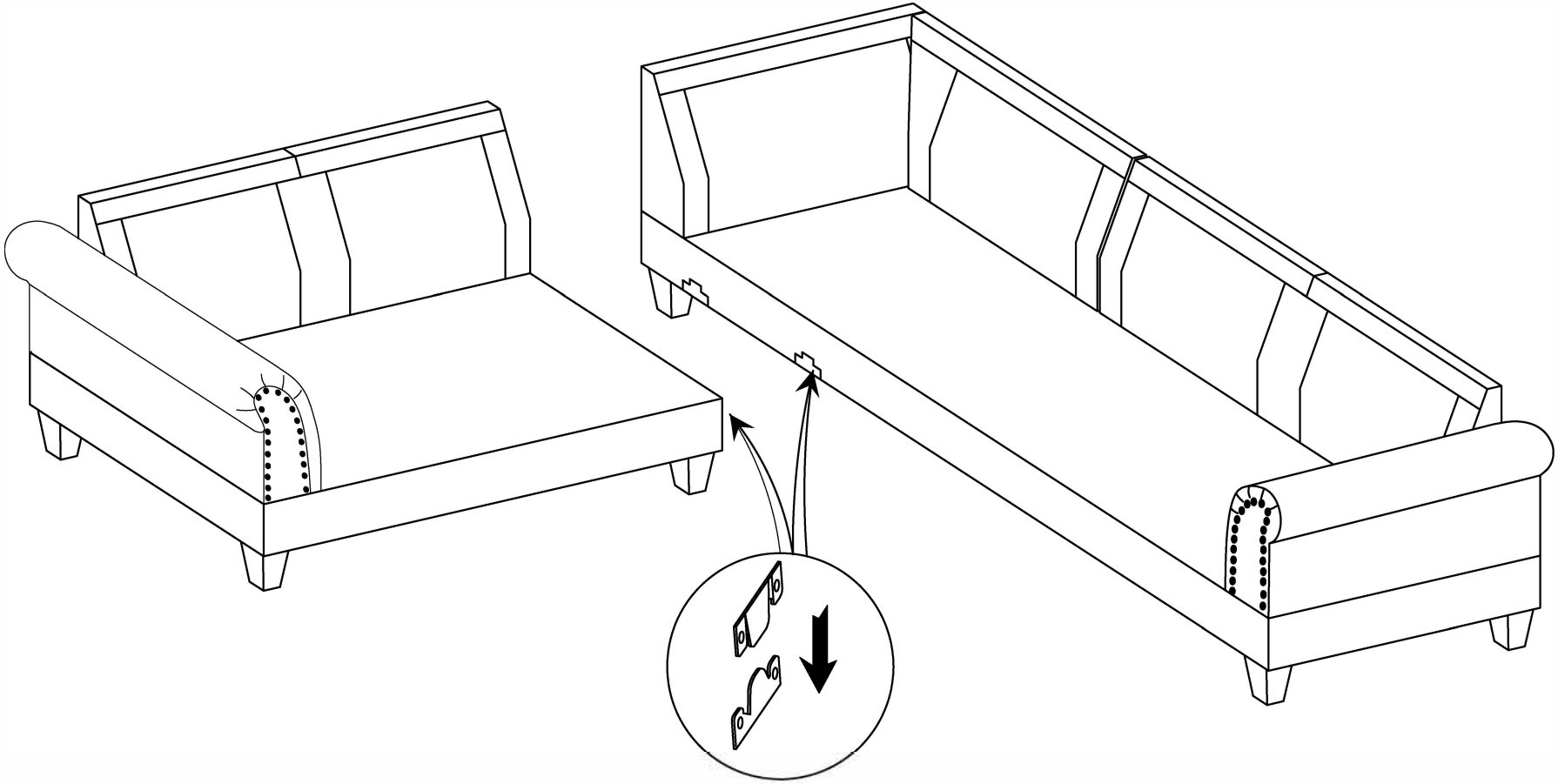

Assembly Instructions

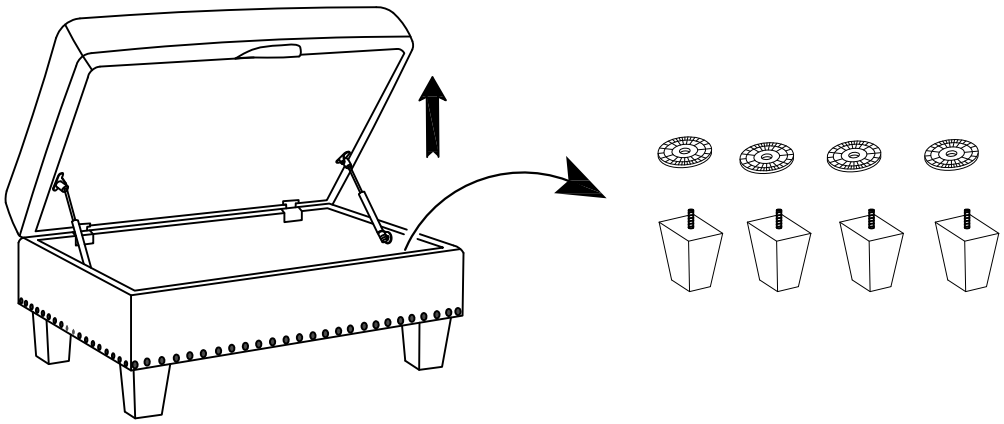

1

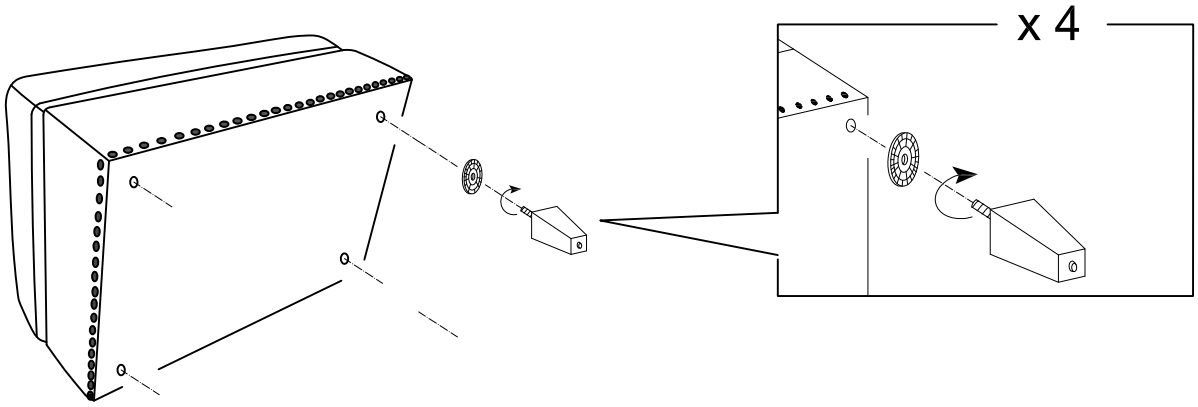

2

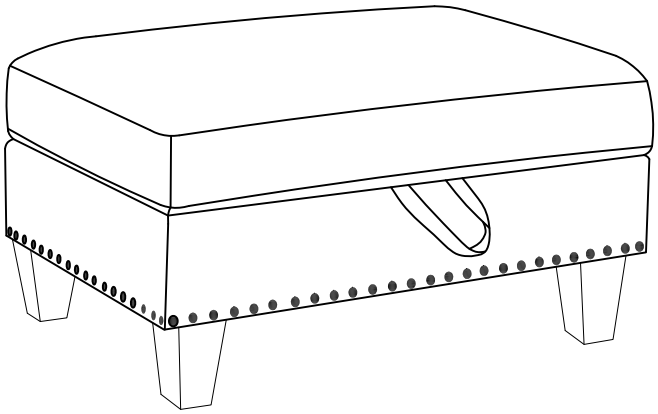

3