ASSEMBLY INSTRUCTIONS
36 INCH CABINET

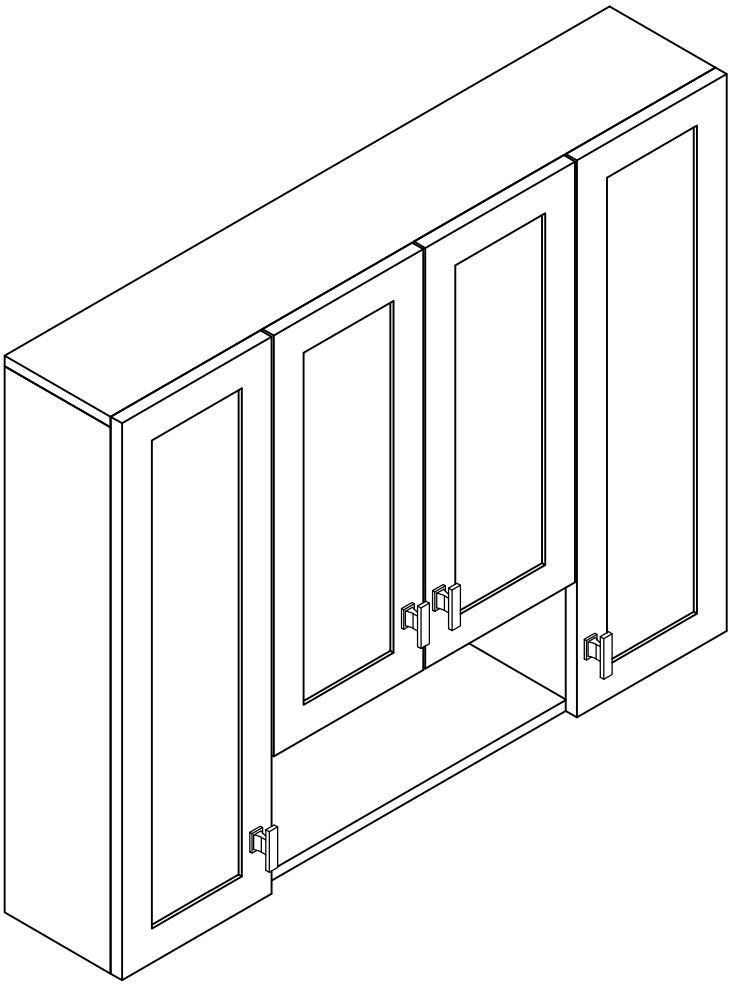

Thank you for purchasing this quality product. Be sure to check all packing material carefully for small parts which may have come loose inside the carton during shipment. Separate, identify and count all parts and hardware. Compare with the parts list to be sure all parts are present.
"DO NOT TIGHTEN SCREWS UNTIL COMPLETELY ASSEMBLED"

*** Use of power tool to assemble this product will invalidate any claim and damage this product making unsafe!!!**
*** Please assemble on a clean soft surface to avoid damage.**

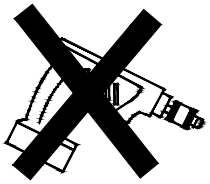

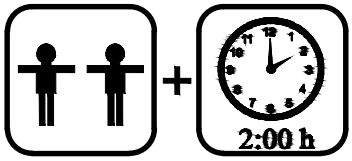

Tools Required

(Not Included) (Not Included)

IMPORTANT:
PLEASE READ INSTRUCTION BEFORE STARTING THE ASSEMBLY

PLEASE DO NOT RETURN TO STORE

Please do not return this product to the retailer!!
We are able to assist you in ANY way

If you find that you have any trouble with assembly or missing or damaged parts please contact the seller.

Before Installation

Important – Please read these instructions fully before starting assembly

Thank you for purchasing this quality product. Be sure to check all packing materials carefully for small parts, which may have come loose inside the carton during shipment. Identify and count all items according to the PARTS LIST and/or HARDWARE LIST shown below. Check you have all the components and tools listed on the following pages.

- We recommend that you assemble this product with the assistance of another person; this will make the assembly easier, and will help eliminate damage to the product or injury to persons during assembly.
- Please do not over tighten screws or bolts until the assembly is completed.
- Keep children and animal away from the work area, small parts could choke if swallowed.
- Please put all parts on a non-abrasive floor before assembly,and follow the assembly steps to assemble your newly purchased product correctly and efficently.

Cam Lock Assembly Instructions

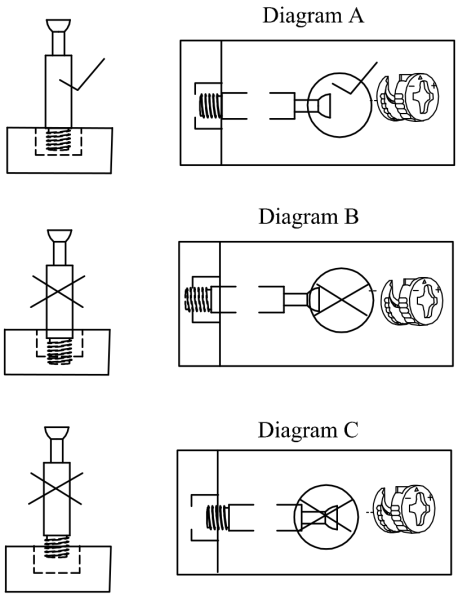

Insert Cam Bolt into hole as shown in diagram A.

Make sure not to insert the Cam Bolt:
Too deep as shown in figure B as this will cause the Cam Lock to be misaligned and unable to interlock properly.

Also avoid inserting the Cam Bolt too close to the surface of the hole as shown in figure C, as this will cause the Cam Lock to be too loose, and not interlock properly.

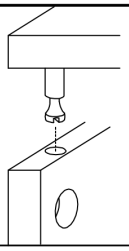

Connect the panels together.

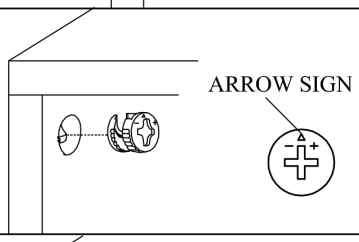

Insert the Cam Lock so the side opening fits over the head of the Cam Bolt.

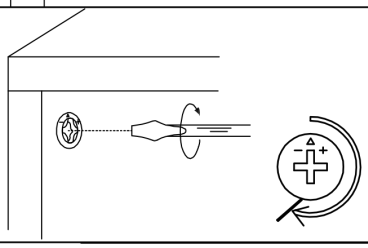

To tighten the Cam Lock, turn it clockwise on half a turn with a flat screwdriver.
**Do not use an automatic screwdriver as it may bend or break if too much power is imposed.*

Detail View - CABINET

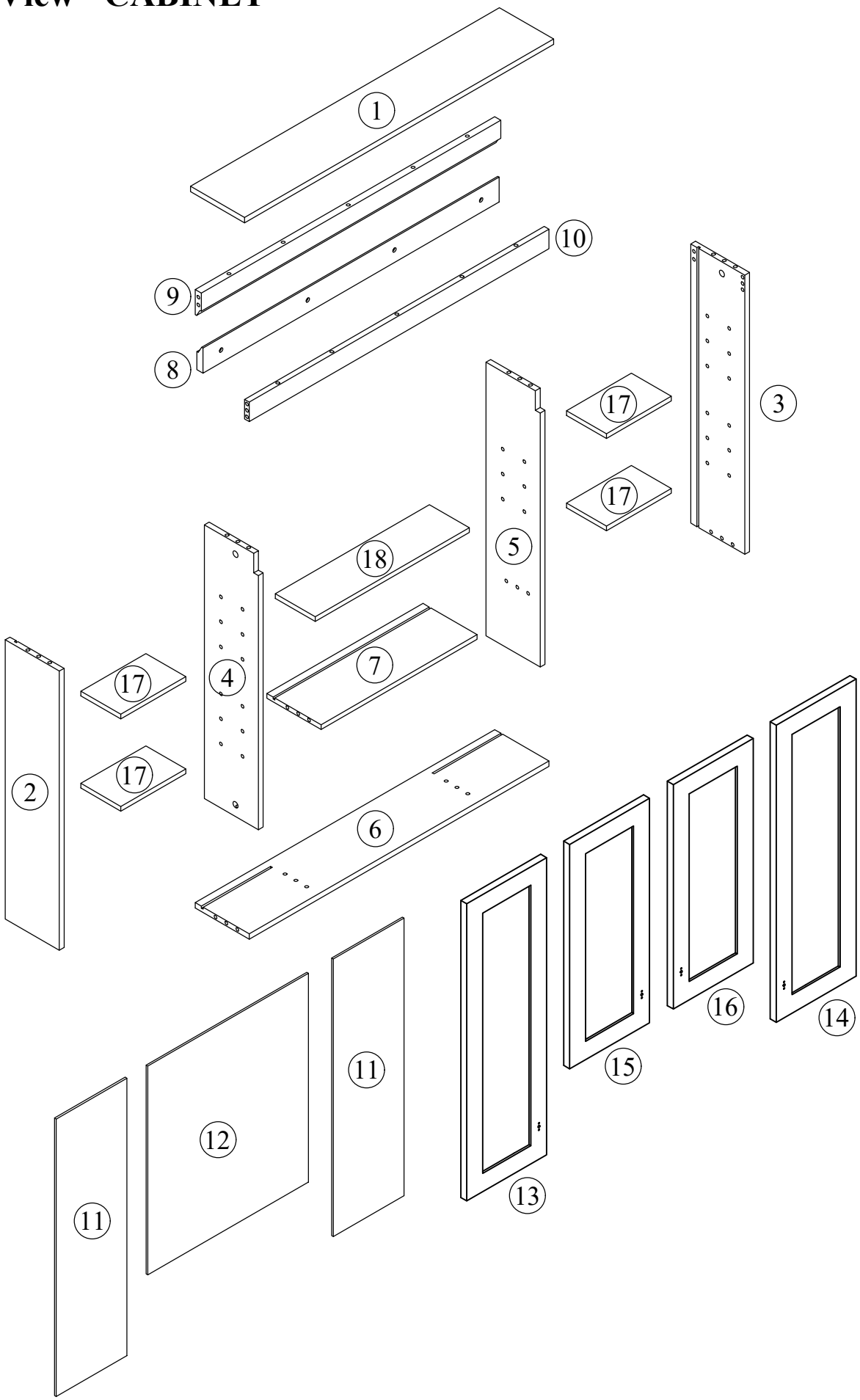

Identifying the Hardware-Identify the hardware using the illustrations below.

Part List - N710P498787

1 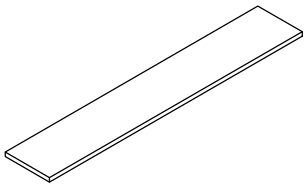 Top Panel - 1pc	2 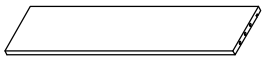 Side Panel Left - 1pc
3 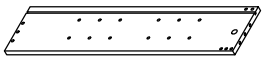 Side Panel Right - 1pc	4 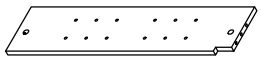 Mid Panel (L) - 1pc
5 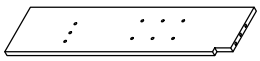 Mid Panel (R) - 1pc	6 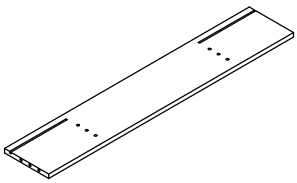 Bottom Panel - 1pc
7 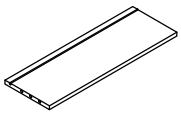 Mid Panel - 1pc	8 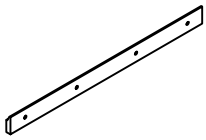 Connect Bar - 1pc
9 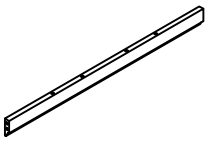 Rear Top Bar - 1pc	10 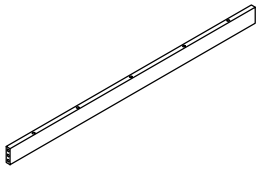 Front Top Bar - 1pc
11 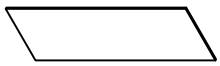 Back Panel (A) - 2pcs	12 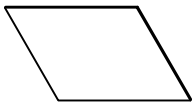 Back Panel (B) - 1pc
13 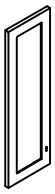 Long Door Cabinet Left - 1pc	14 Long Door Cabinet Right - 1pc

Part List - N710P498787

15 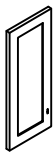 Short Door Cabinet Left - 1pc	16 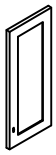 Short Door Cabinet Right - 1pc
17 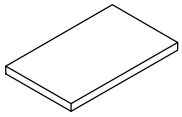 Adjustable Shelf (A) - 4pcs	18 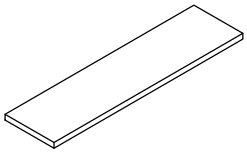 Adjustable Shelf (B) - 1pc

Hardware List - N710P498787

A 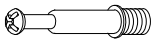 ø6x35mm	B ø14.5x9mm	C
Three in one bolts (20pcs)	Three in one lock (20pcs)	Handle (4pcs)
D 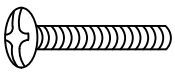 ø5/32"x25mm	E 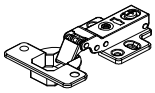	F 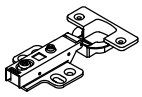
Handle screw (4pcs)	Damping hinge (4pcs)	Damping hinge (4pcs)
G ø7xø3.5x15mm	H ø8x30mm	I ø6x30mm
Flat head screw (48pcs)	Wood dowel (26pcs)	Wood dowel (4pcs)
J 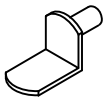	K ø10xø5x60mm	L ø12x55mm
Shelf Pin(20pcs)	Round head screw (4pcs)	Plastic stopper (4pcs)
M 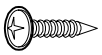 ø7xø3.5x15mm		
Round head screw(4pcs)		

STEP: 1

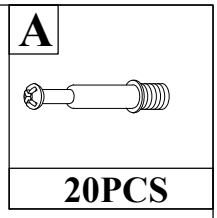

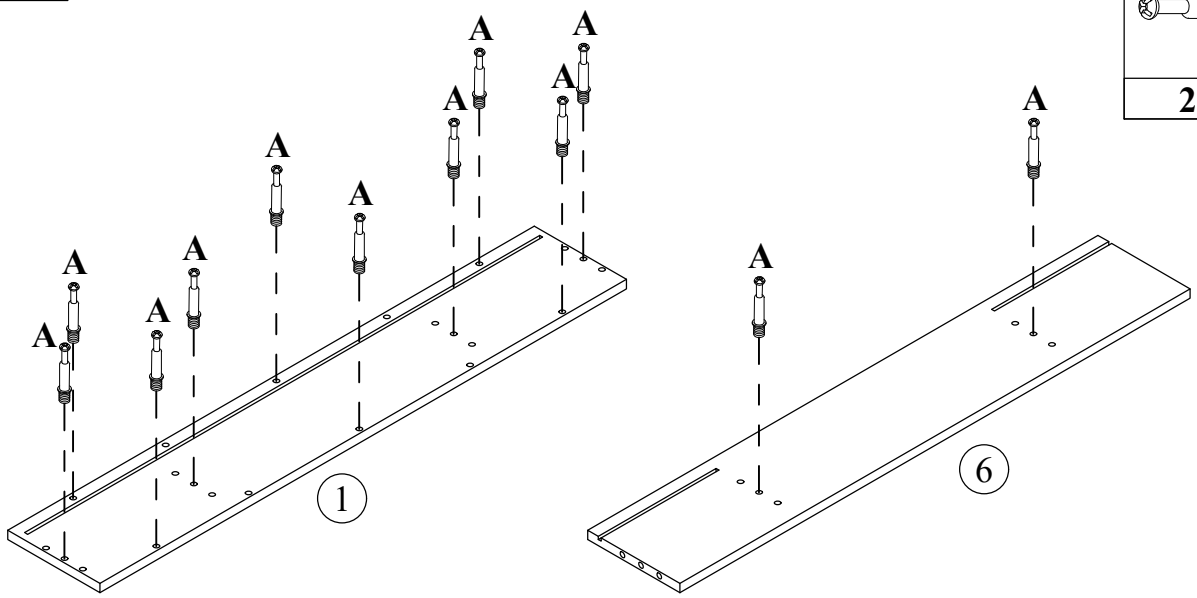

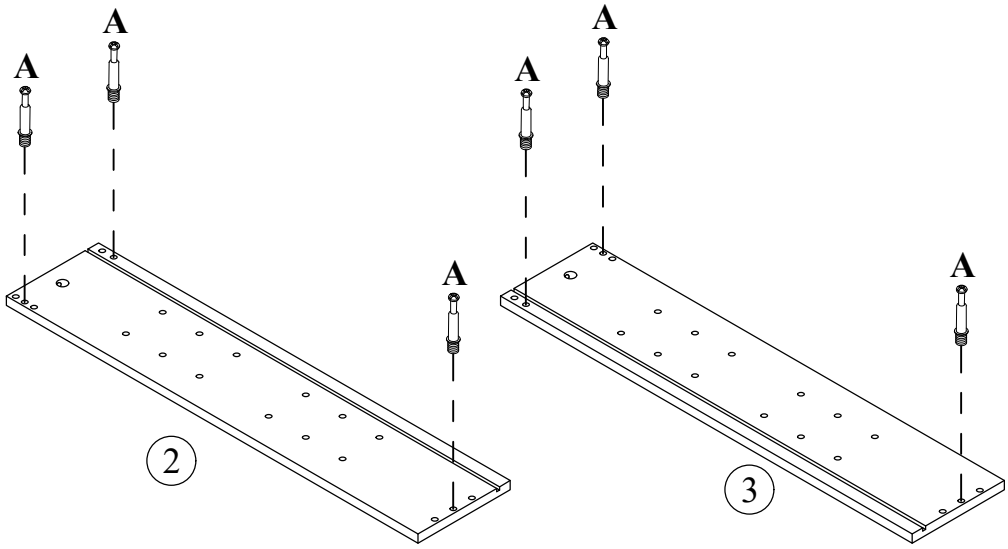

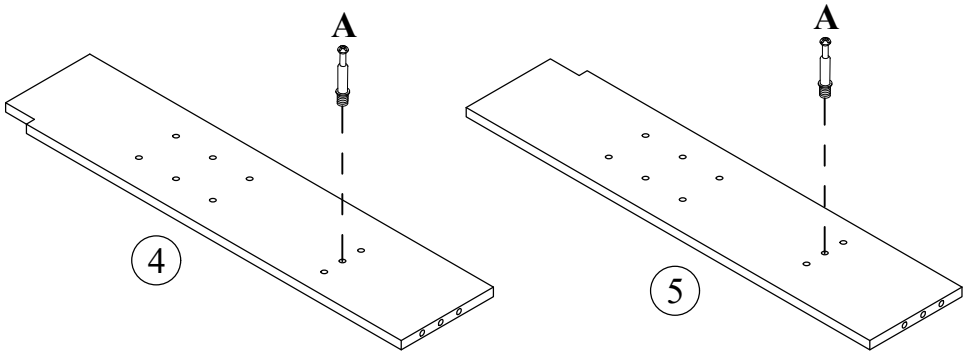

STEP: 2

B	I
2PCS	4PCS

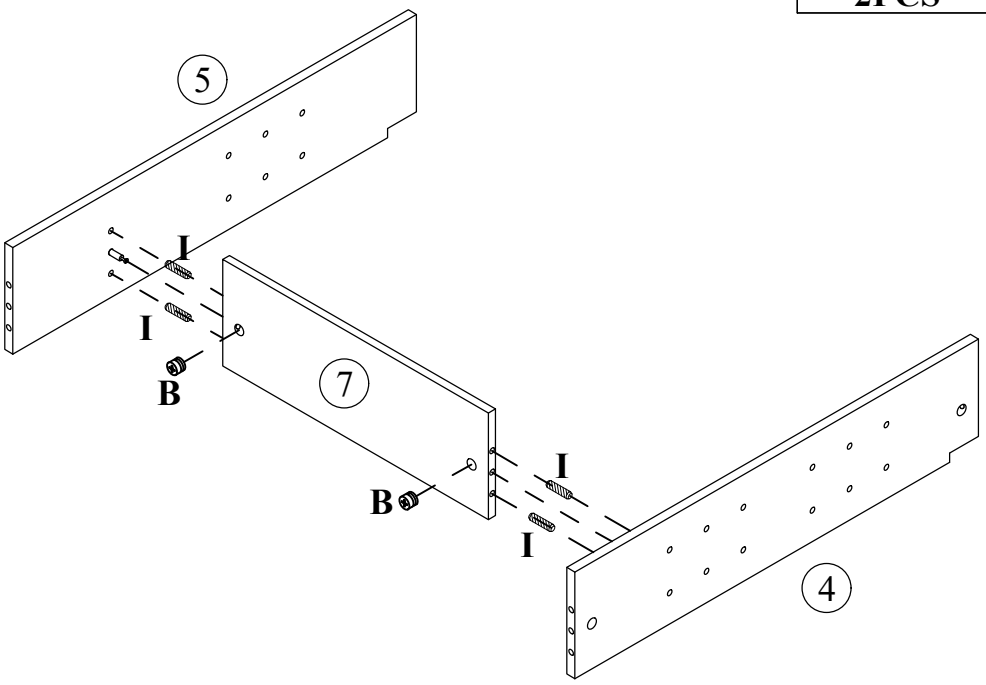

STEP: 3

B	H
2PCS	4PCS

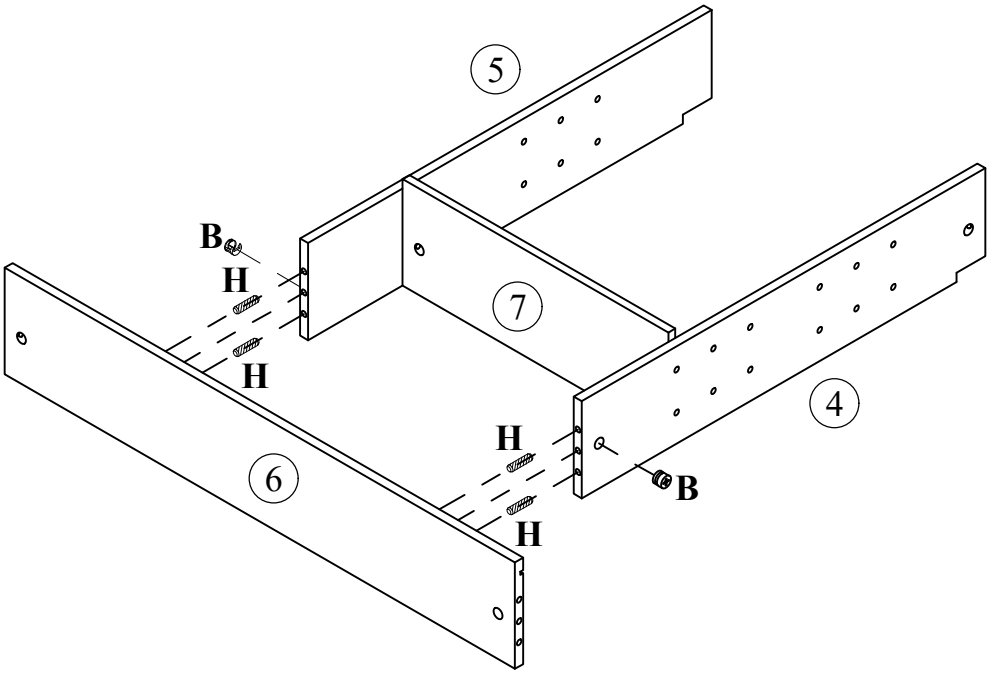

STEP: 4

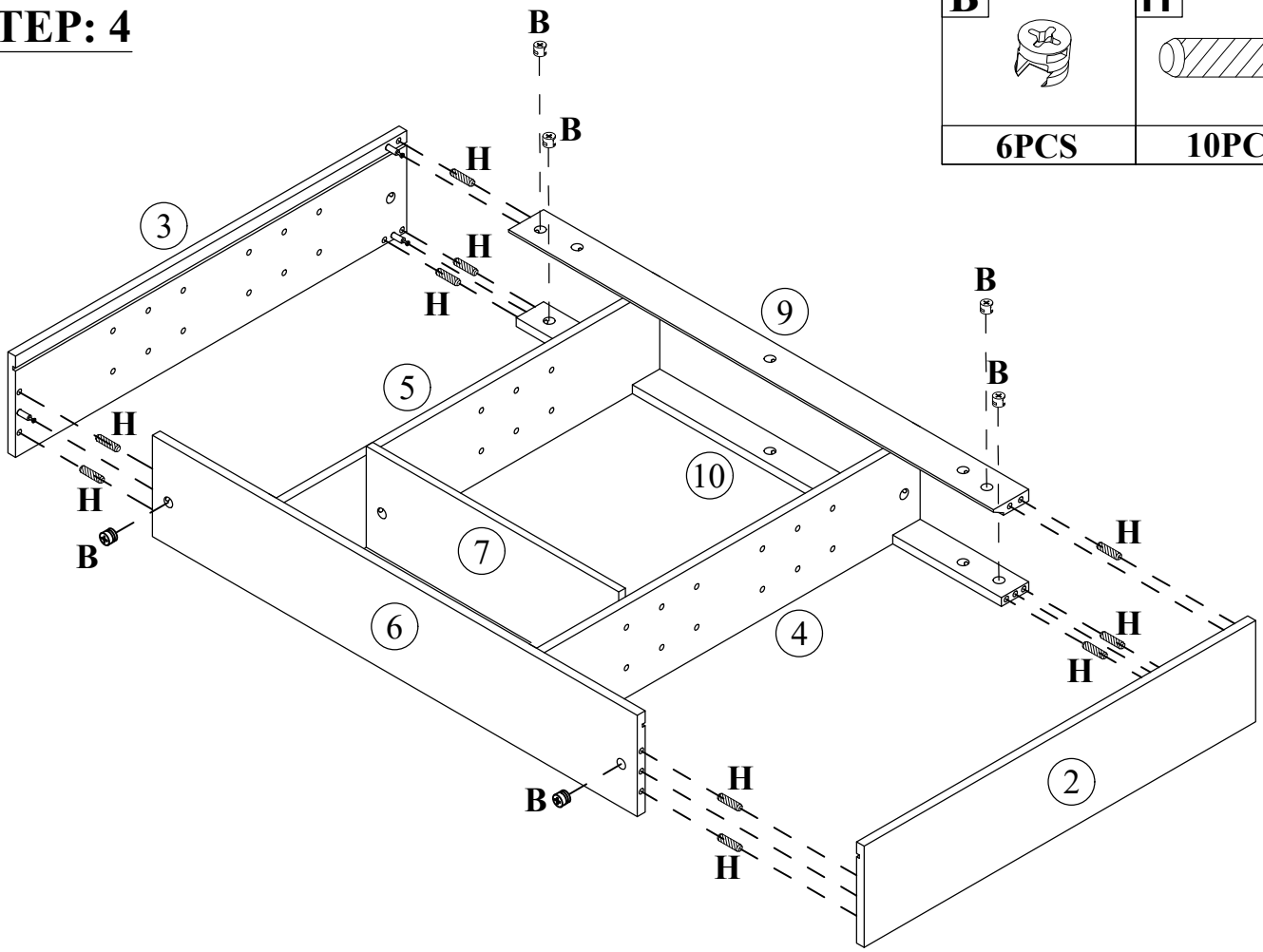

STEP: 5

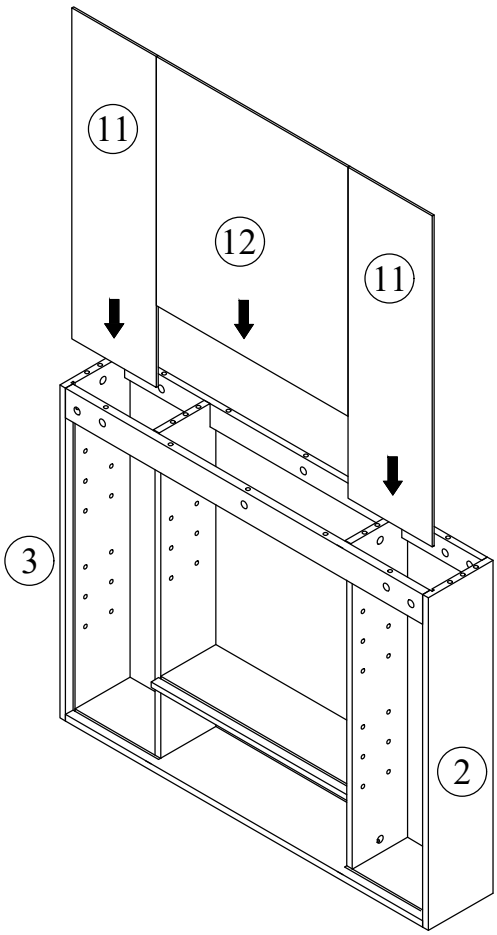

STEP: 6

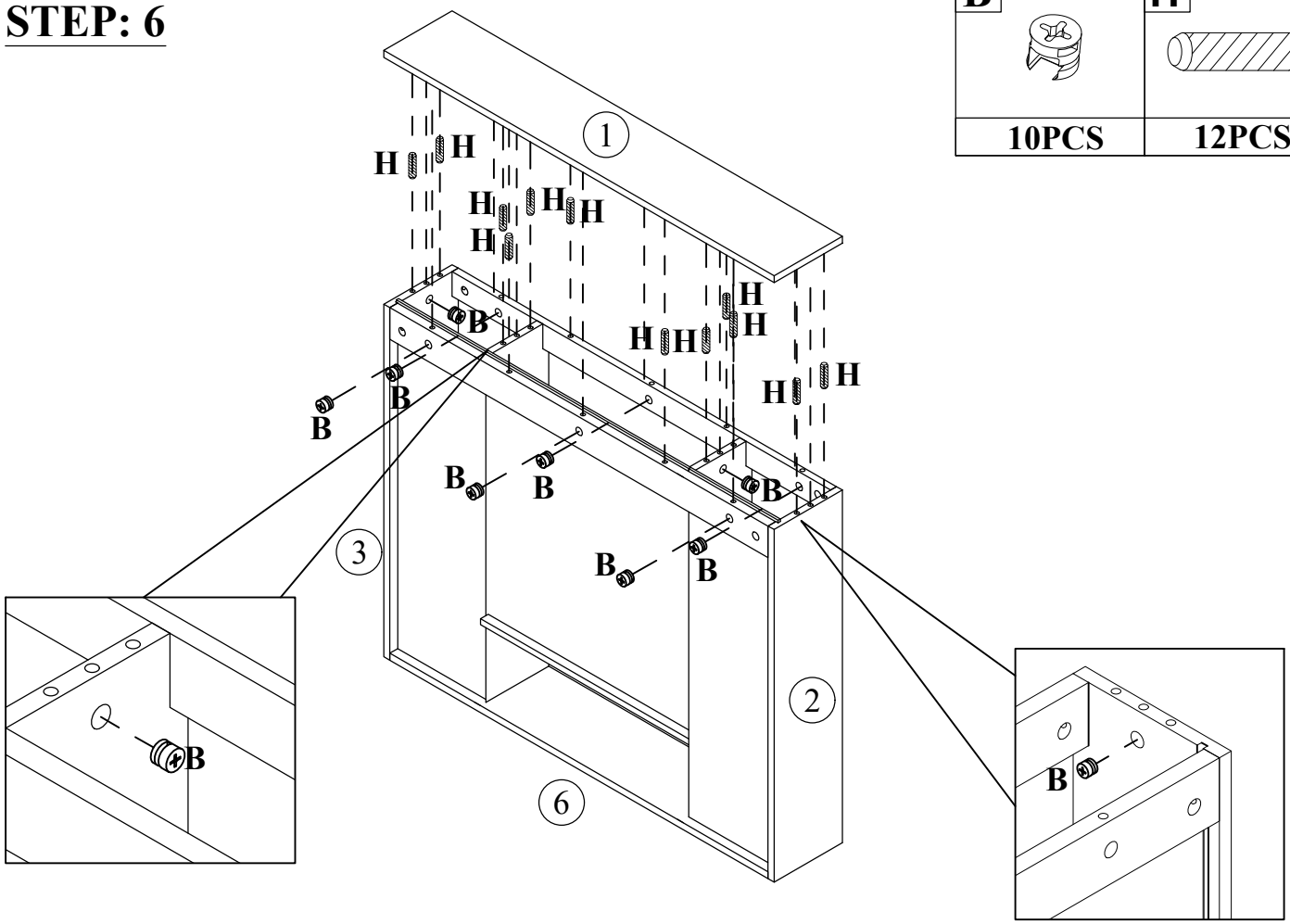

STEP: 7

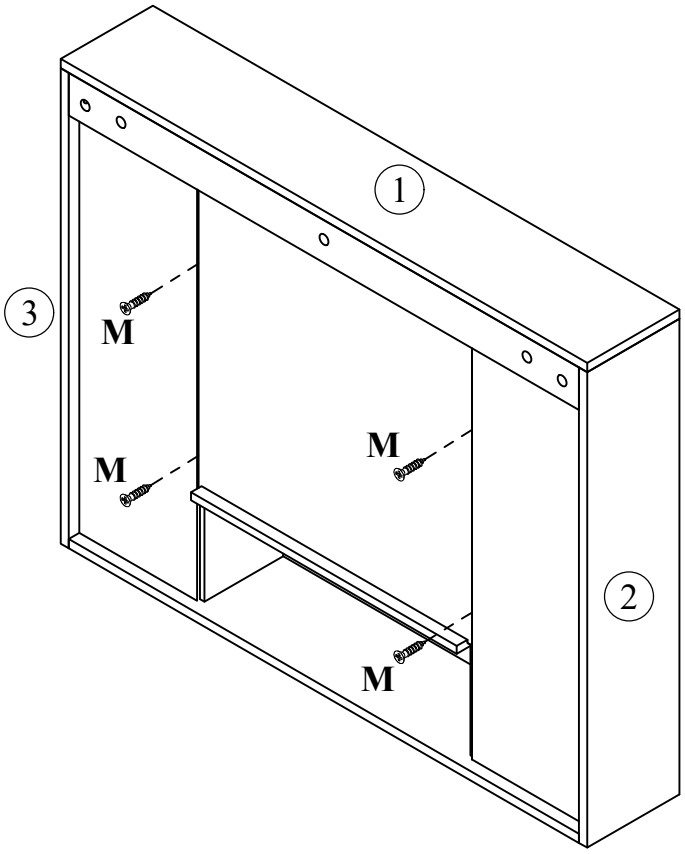

STEP: 8

F	G
4PCS	8PCS

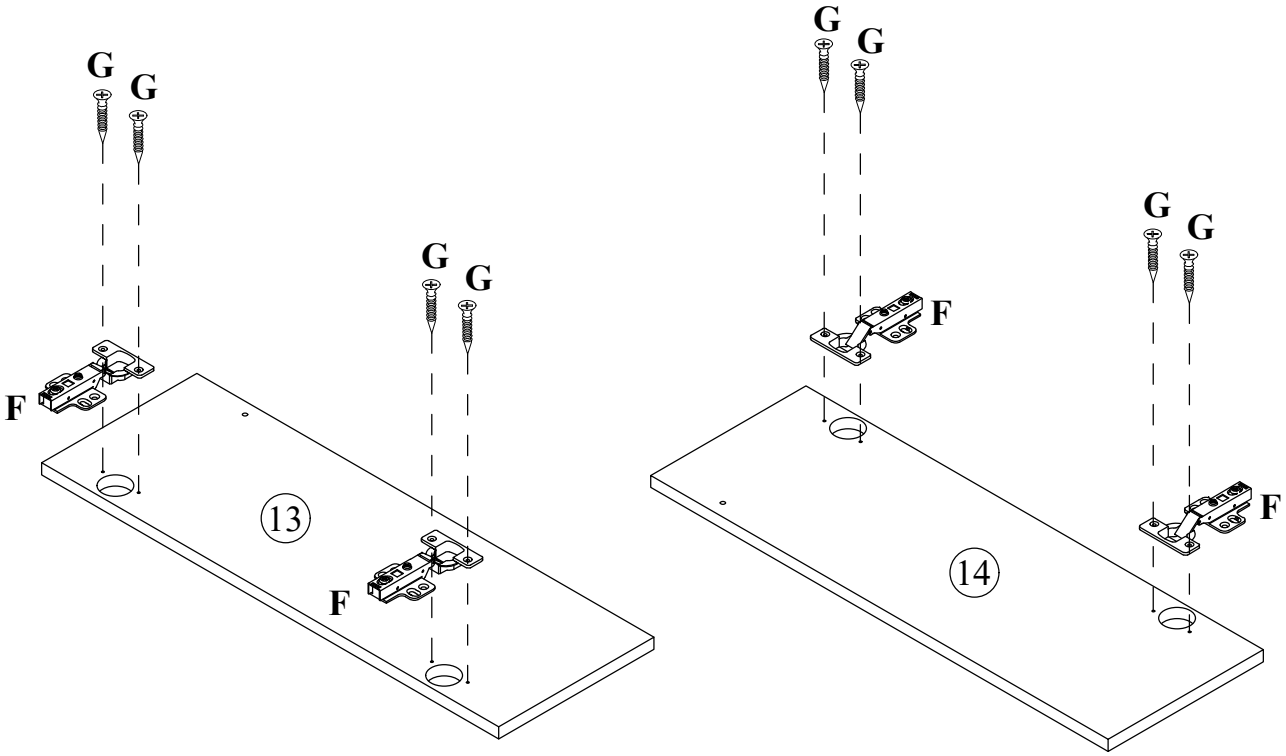

STEP: 9

C	D	G
2PCS	2PCS	16PCS

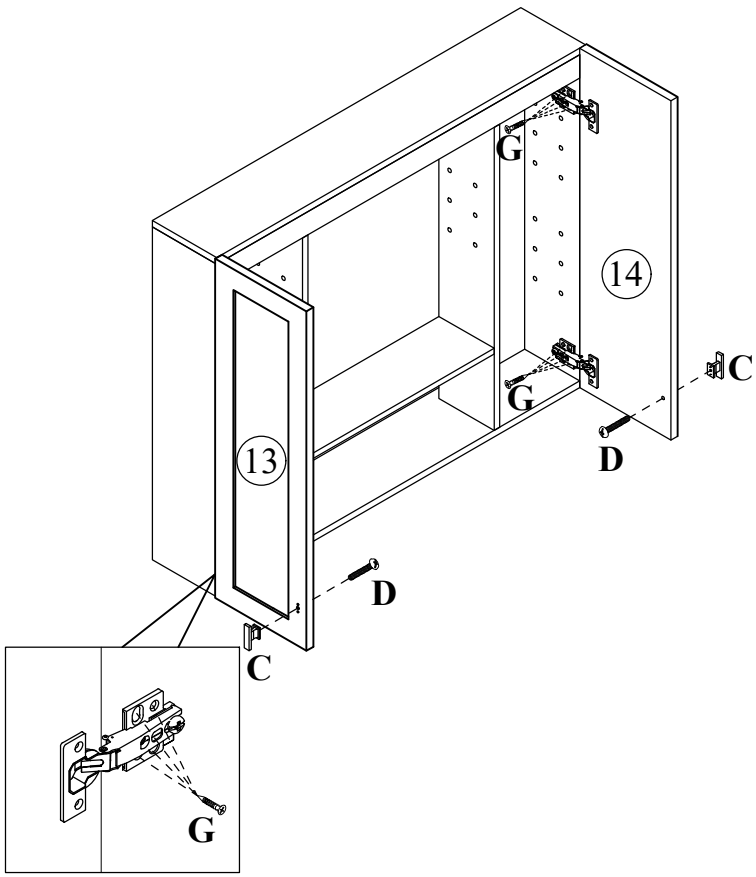

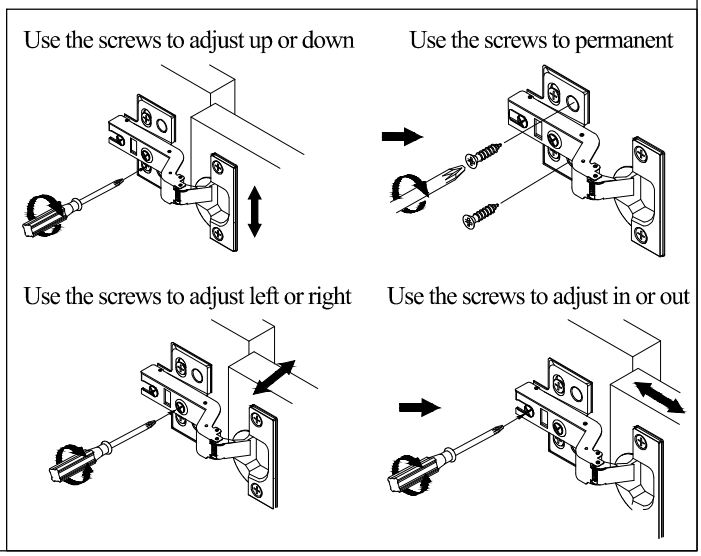

STEP: 10

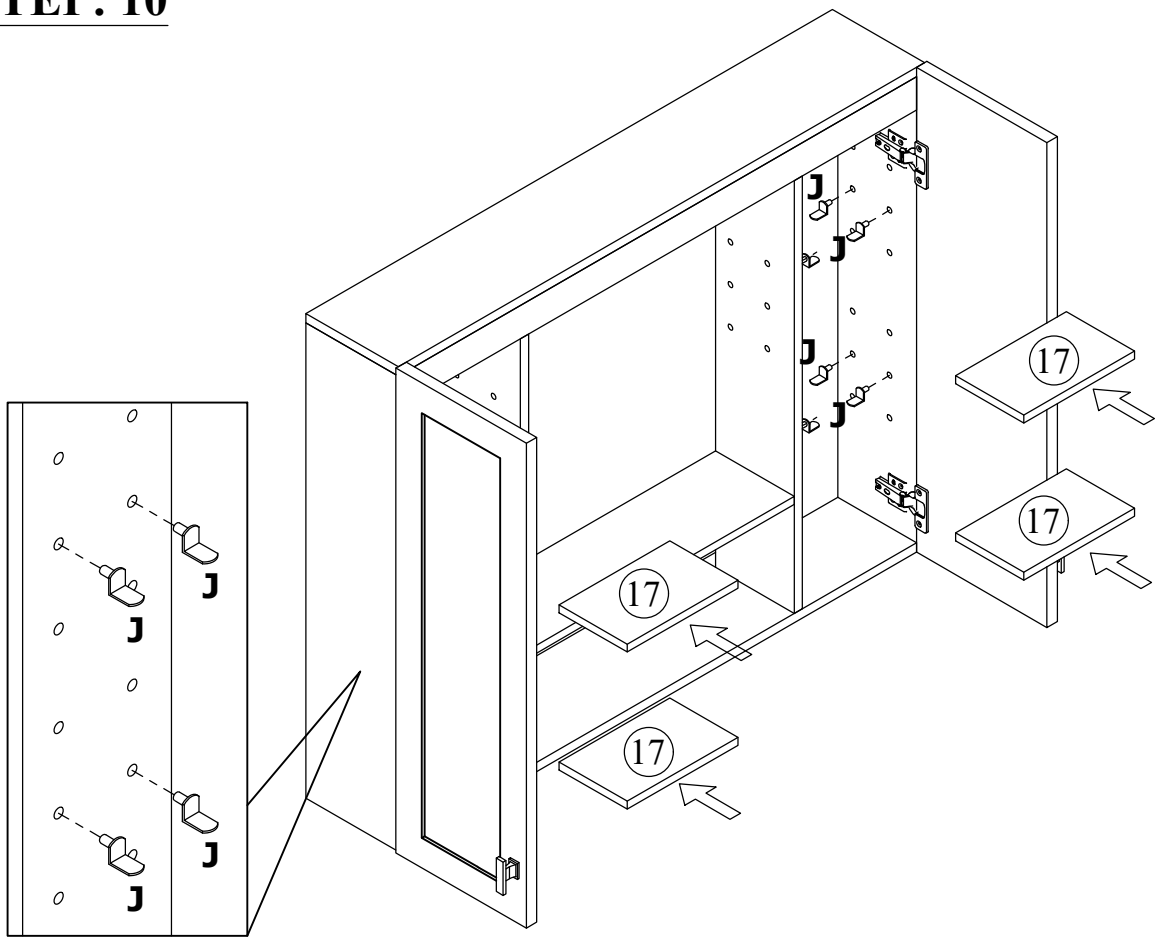

STEP: 11

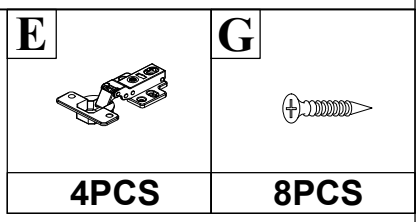

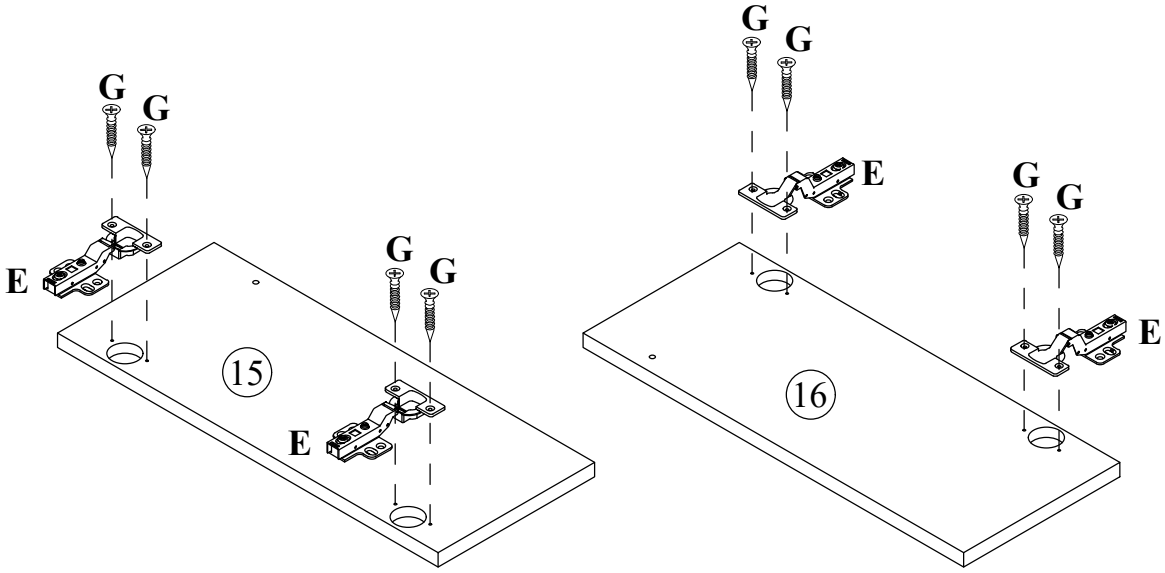

STEP: 12

C	D	G
2PCS	2PCS	16PCS

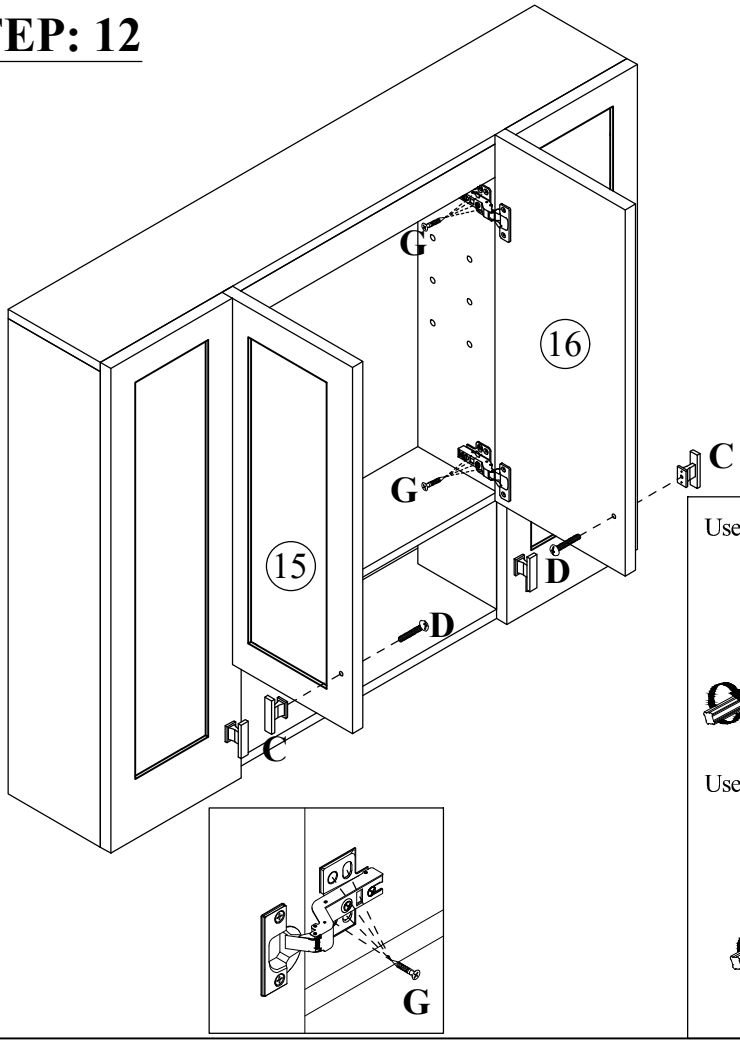

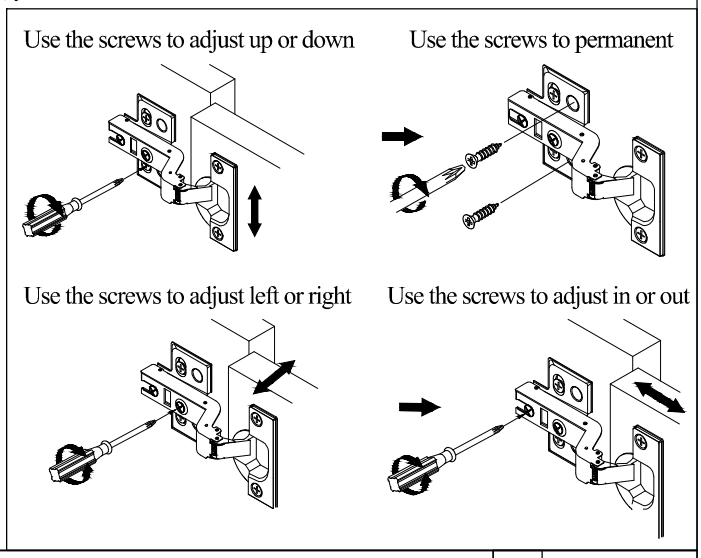

STEP: 13

J
4PCS

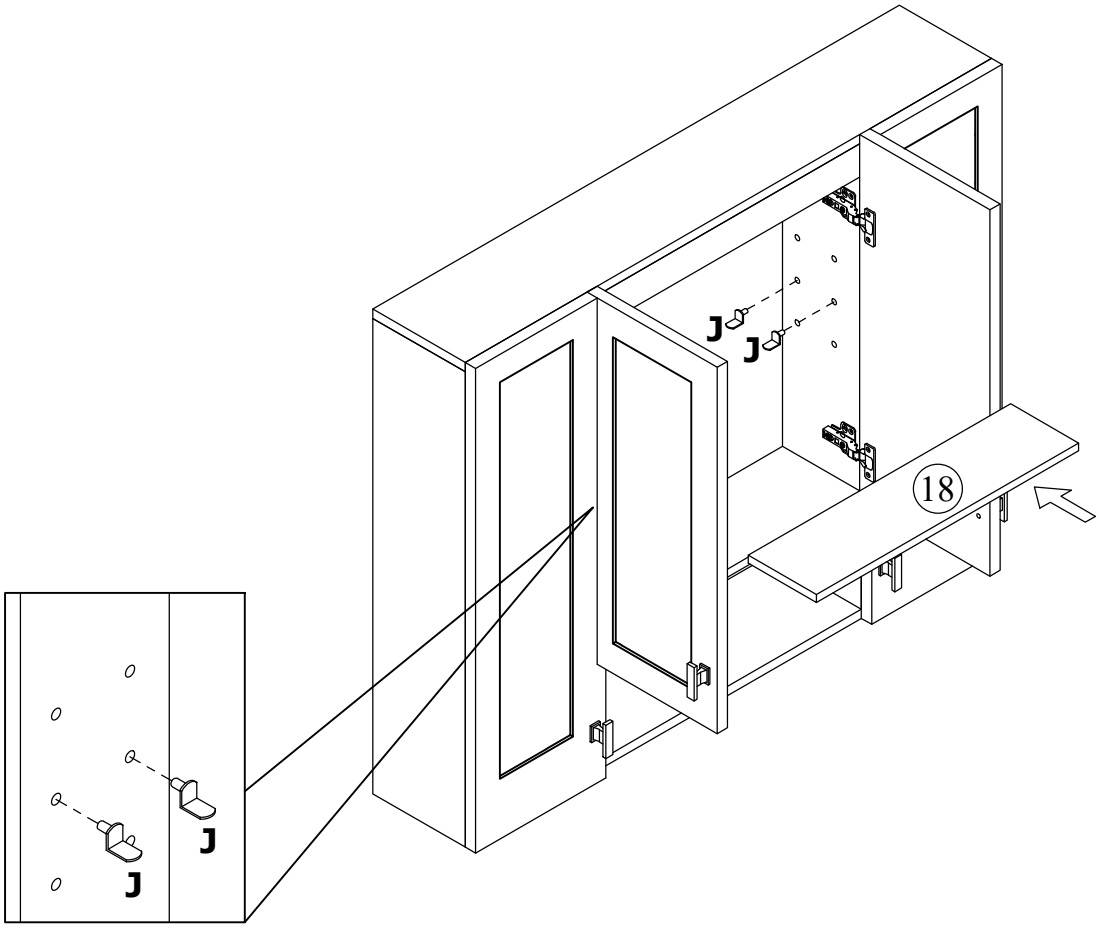

STEP: 14

Option: 1

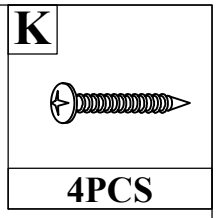

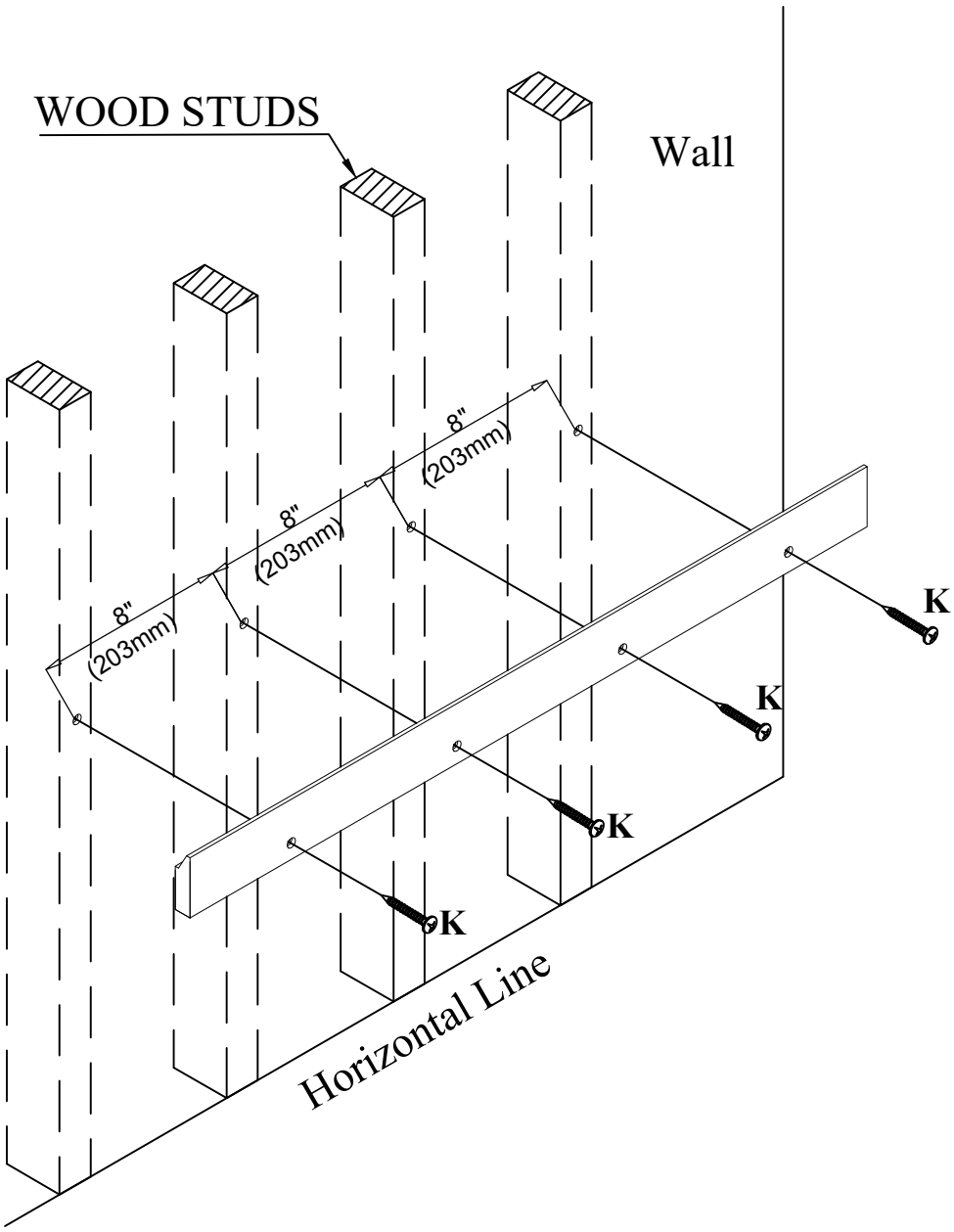

Use a wood stud finder to locate the wood studs behind the walls, and then mark by pencil.
Use a level to ensure the Cross Bar (8) will be level before installing to the wall.

The 8"/8"/8" value is for reference only,
please according to the Wood stud's location.

Make sure the screw holes must be on the wood studs otherwise
the vanity will fall out because the dry wall cannot hold the cabinet.

STEP: 15

Option: 2

K	L
4PCS	4PCS

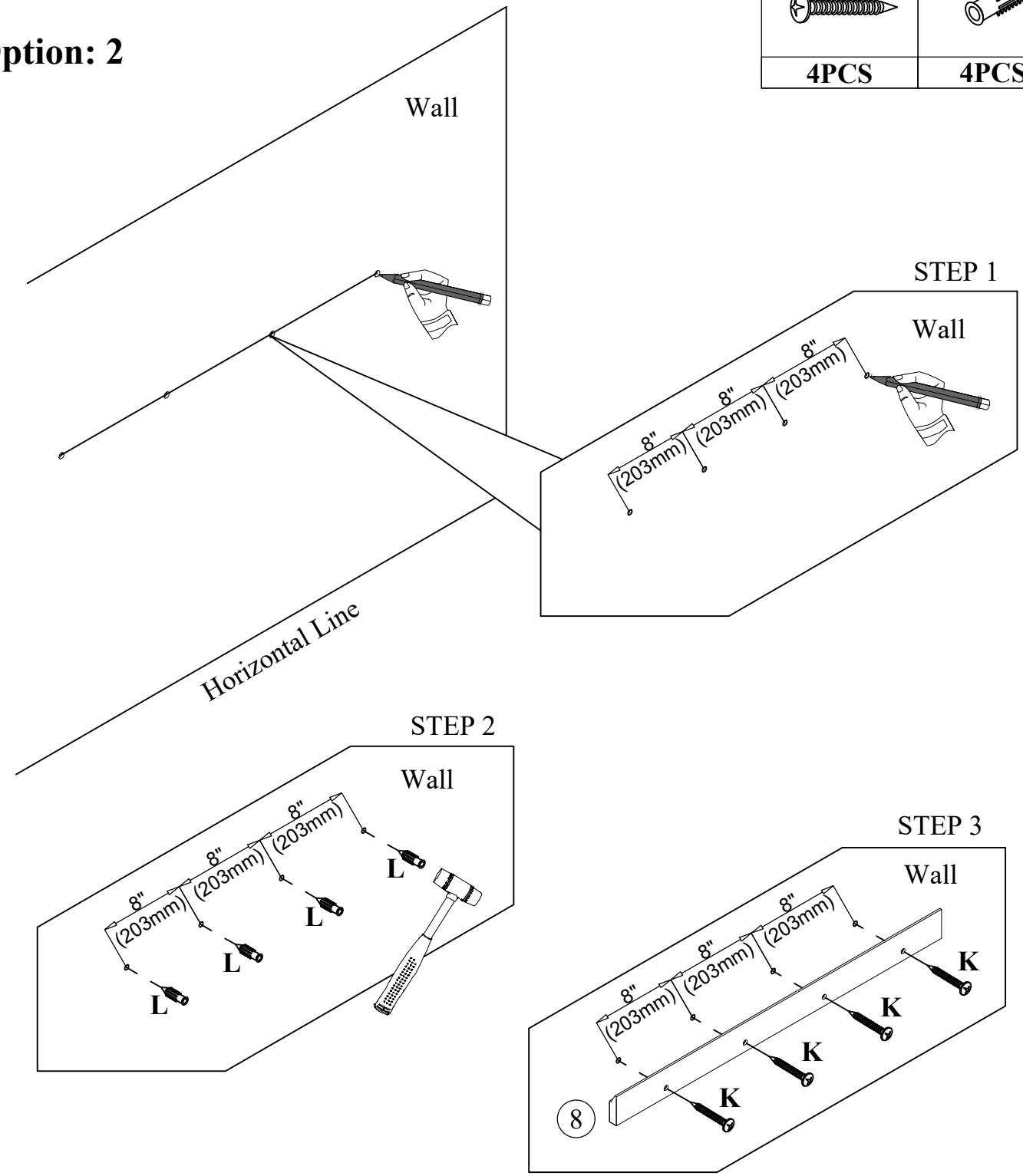

Use a wood stud finder to locate the wood studs behind the walls, and then mark by pencil.
Use a level to ensure the Cross Bar (8) will be level before installing to the wall.

⚠ The 8"/8"/8" value is for reference only, please according to the Wood stud's location.

⚠ Make sure the screw holes must be on the wood studs otherwise the vanity will fall out because the dry wall cannot hold the cabinet.

STEP: 16

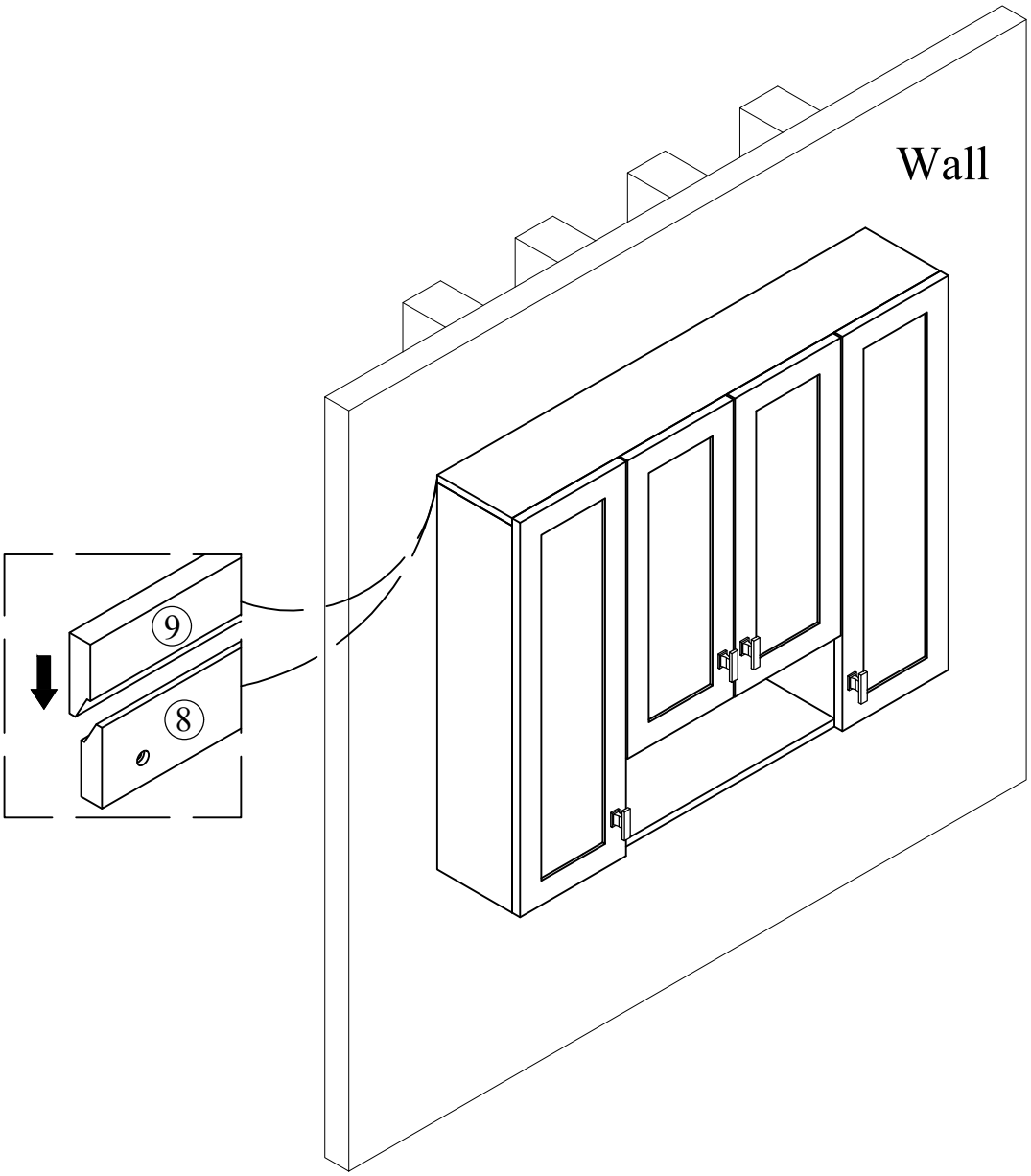

STEP: 17

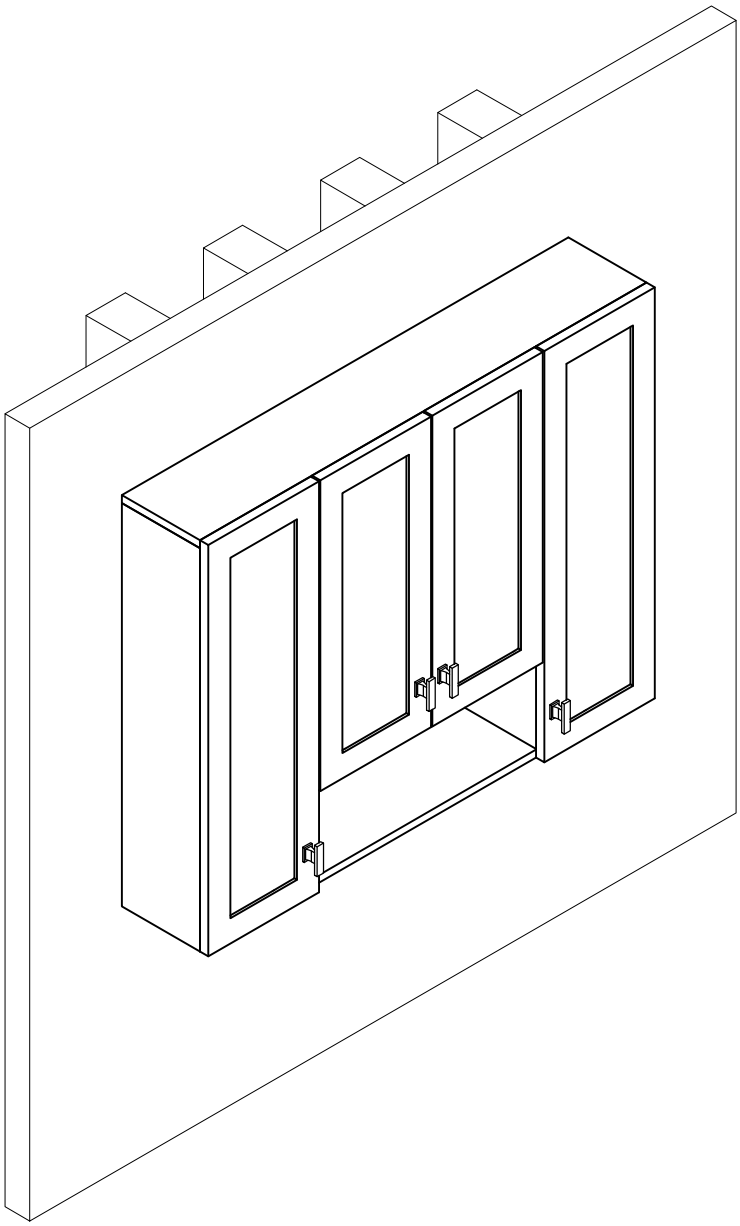

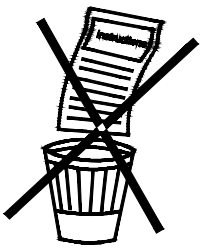

HINGE ADJUSTMENTS

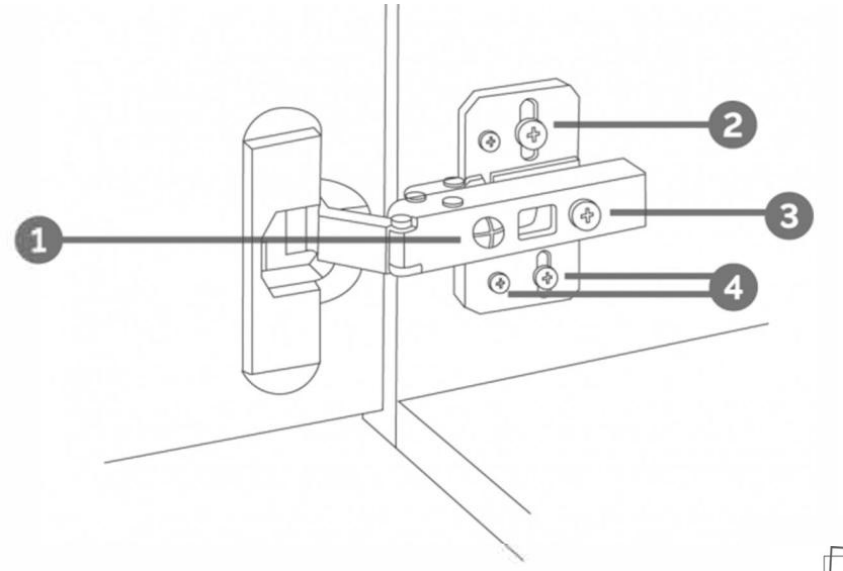

1 Sideways / Tilt adjustment

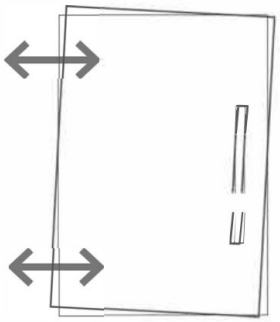

Turn the screw
clockwise to move the door further away from the side of the cabinet
anticlockwise to move the door closer to the side of the cabinet

2 4 Height adjustment

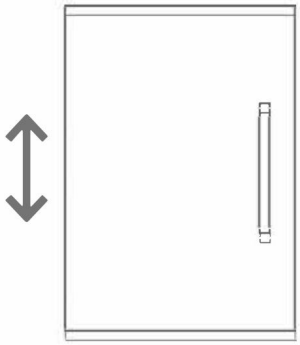

While supporting the weight of the door, turn the screws
clockwise to move the door up
anticlockwise to move the door down

3 Forward and back adjustment

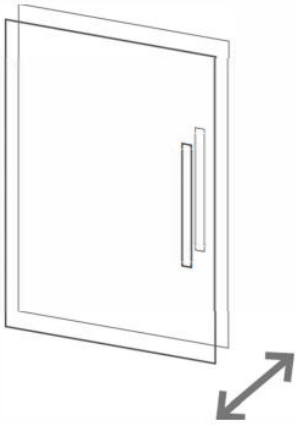

If the gap between the back of the door and the cabinet is too small, and the door may not close fully. Turn the screw
clockwise to decrease the gap between the door and the cabinet
anticlockwise to increase the gap between the door and the cabinet