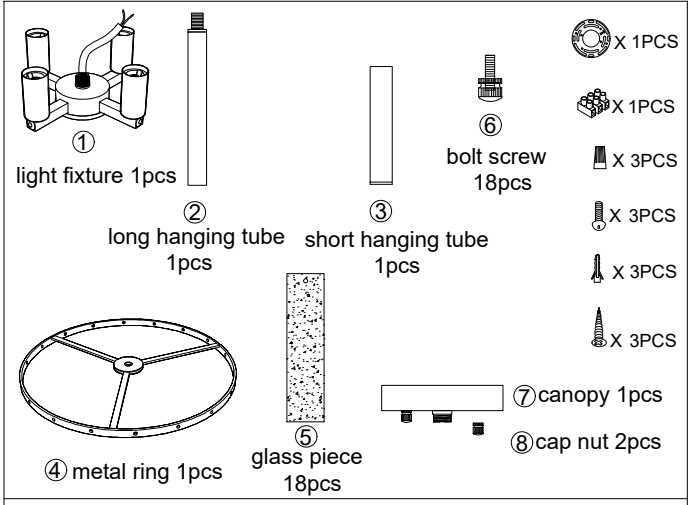

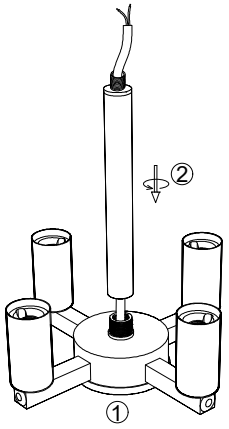

1.Let the wire of the fixture go through the long hanging tube ② , rotate to install the tube ② to the light fixture.

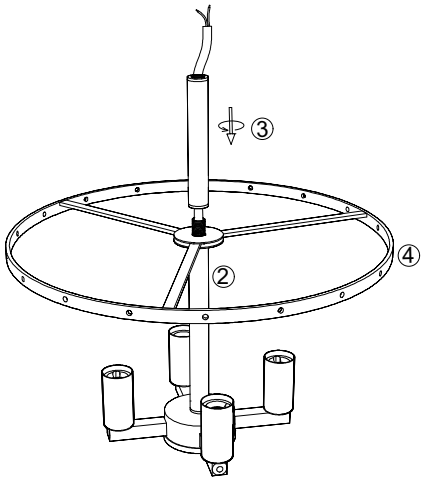

2.Let the wire go through the metal ring ④ and short hanging tube ③ , rotate the tube ③ to fix both to the fixture.

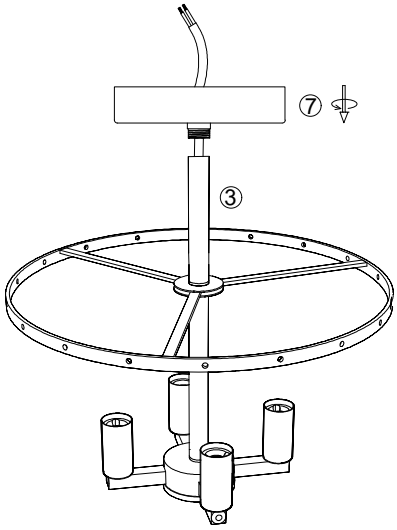

3.Let the wire go through the canopy ⑦ , rotate to install the canopy ⑦ to the light fixture.

Should be carefully when install the glass piece to avoid damage !!!

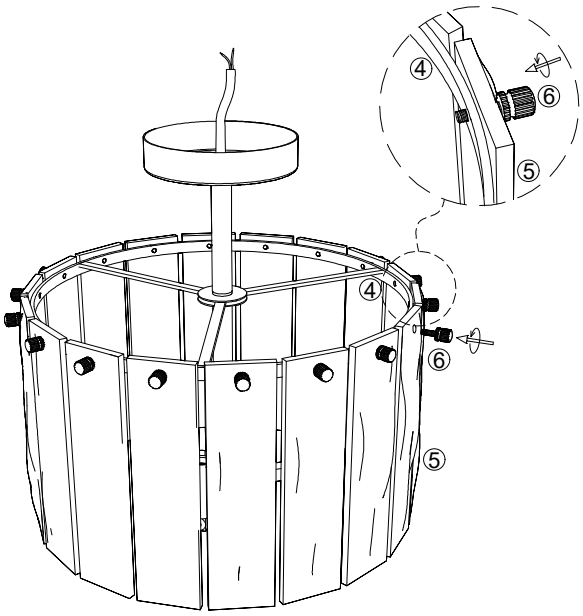

4.Install the glass piece to the metal ring with bolt screw ⑥.
(Should be carefully when install the glass piece to avoid damage!!!)

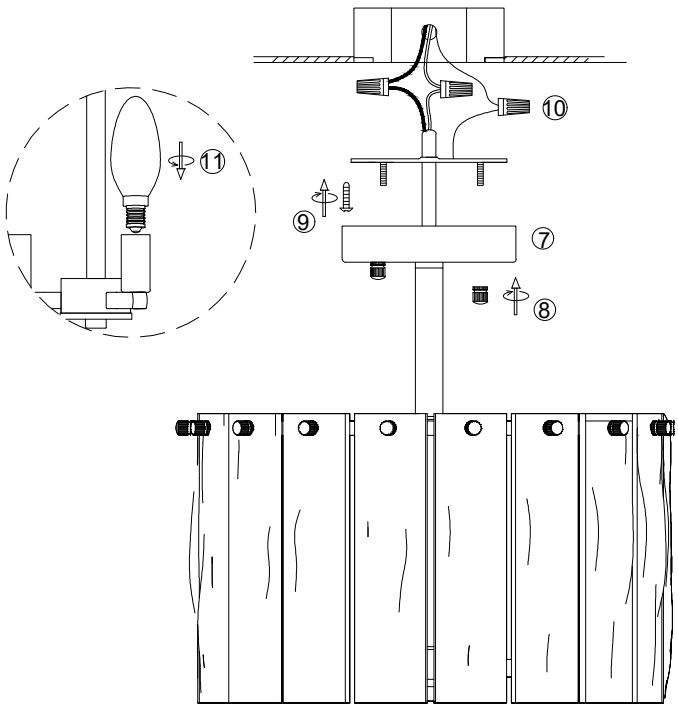

5.Install the bracket to the ceiling junction box with screw ⑨.
6.Connect the wire to your home line with cap connector ⑩.
7.Install the fixture to the bracket with cap nut ⑧.
8.Install the bulb ⑪.

X7013S-4
Please read carefully before installation!!!
Note : Please make sure that the electricity is powered off during installation !
Only a professional electrician should install this kind of product !