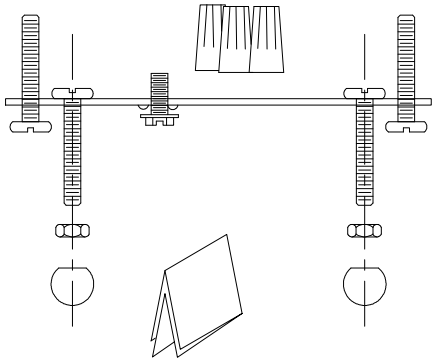

UL SPECIFICATION
* FIXTURE SHALL BE LISTED FOR LOCATION ONLY AND LABELED AS SUCH.
* FIXTURE MUST BE MANUFACTURED IN ACCORDANCE WITH UL STANDARD 1598.

PARTS SPECIFICATIONS

ITEM	QTY	DESCRIPTION
A	(1)	SOCKET- UL LISTED/CSA CERTIFIED BASE= MEDIUM SOCKET= PORCELIN SEE LEAD WIRE FOR SOCKET WIRE SPEC.
B	(1)	LEAD WIRE- 7" [180] FROM CANOPY UL LISTED/CSA CERTIFIED, AWG #18 105°C BLACK AND WHITE WIRE. STRIP 1/2 [12.7], SPLIT 3 [76.2]. FROM TOP OF SCROLL. (SEE CHART FOR COLOR).
C	(1)	GROUND WIRE- 7" [180] FROM CANOPY 1/4 LAY COPPER GROUND WIRE. FROM TOP OF SCROLL. (SEE CHART FOR TINT).

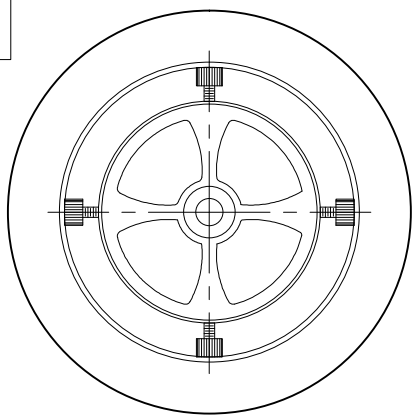

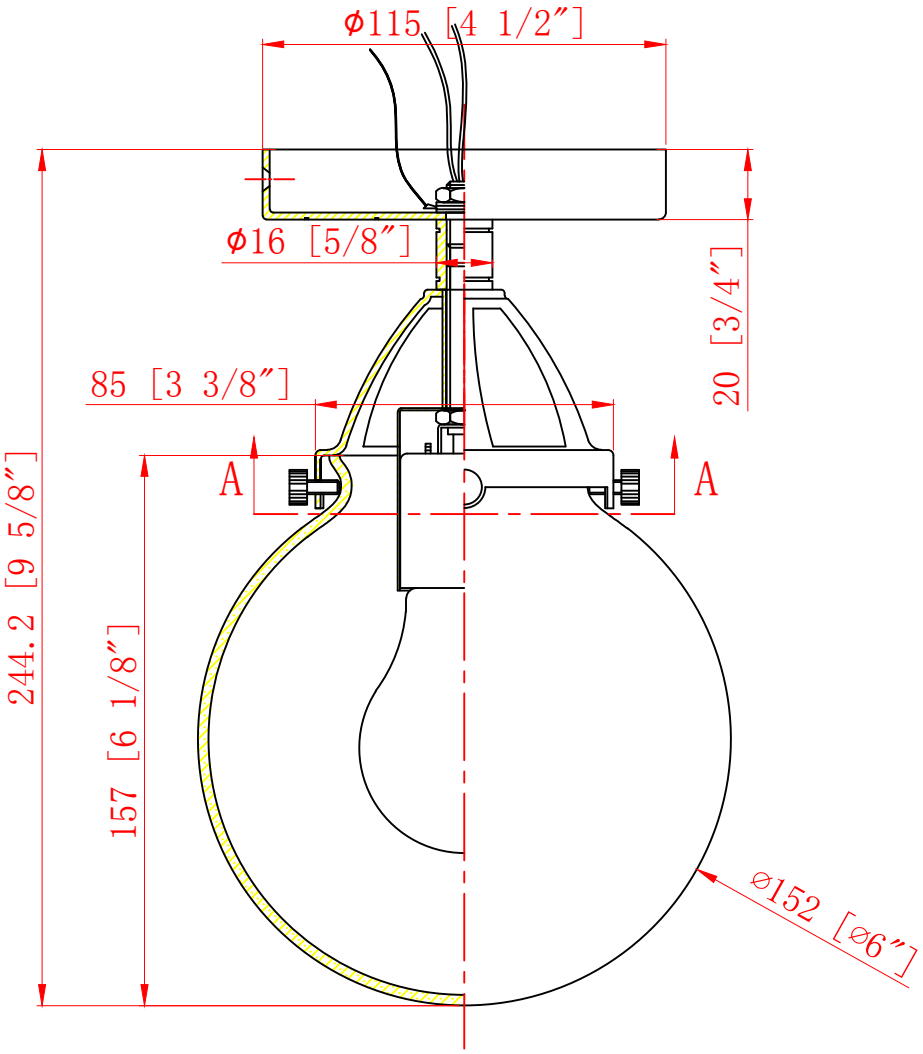

NO.	PART NO.	DESCRIPTION	REQ.

DRAWN IN THIRD ANGLE PROJECTION	"mm" DIMENSION INDICATED IN [ ] DIMENSION IN [ ] IS FOR REF. ONLY TOLERANCES (EXCEPT AS NOTED)				
	DECIMAL NONE ±.031 .X ±.015 .XX ±.010 .XXX ±.005	ANGULAR ± 1/2°	FRACTIONAL ± 1/32	SCALE 1:2	
		DATE 07/08/2020	DRAWN BY SSL	CHECKED BY X	APPROVED BY X

TITLE

PART NO. REV.

ITEM NO. REV. A