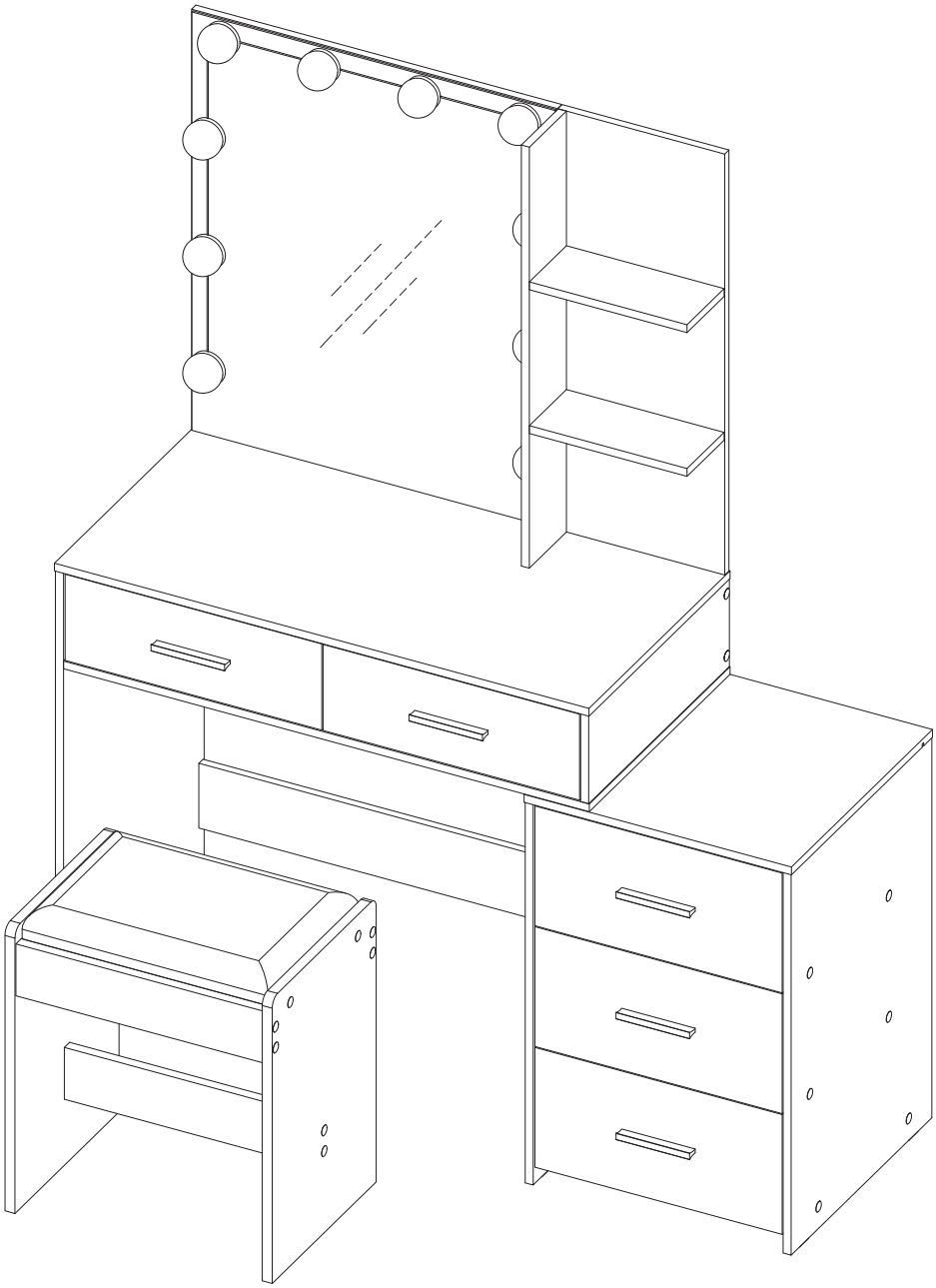

General Guidelines

- Please read the following instruction carefully and use the product accordingly.
- Please keep this manual and hand it over when you transfer the product.
- This summary may not include every detail of all variations and considered steps. Please contact us when further information and help are needed.
- If there are any defective or missing parts after unpacking, please cease assembly and get in contact with us immediately.

Notes

- The product must be assembled and used in accordance with the provisions of the manual.
- There may be some odour after unpacking the parcel, please put this item in a ventilated place for a few days and the odour will dissipate.

Warnings

- During the assembly process, keep any small parts out of the reach of children. It may be fatal if swallowed or inhaled.
- To avoid the potential dangers of suffocation, please keep all parts and packaging (films, plastic bags and foam, etc.) away from babies and children.
- Do not stand or sit on the product.
- Never touch with sharp objects or corrosive chemicals, which may damage the surface of the item.
- Do not expose product to direct sunlight or rain; and do not put it in a humid place.

CONTACT US

- If you have any questions regarding the installation of your products,

1

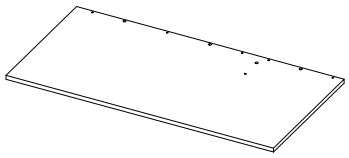

1PC

2

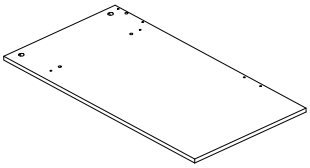

1PC

3

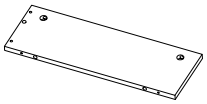

1PC

4

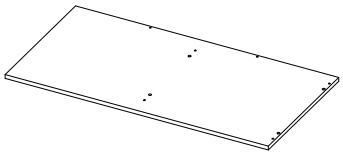

1PC

5

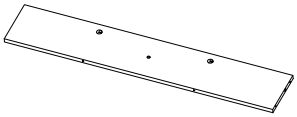

1PC

6

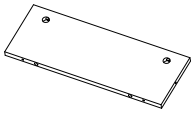

1PC

7

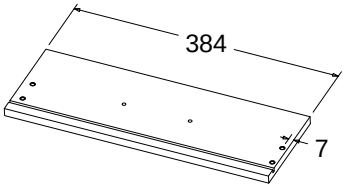

1PC

8

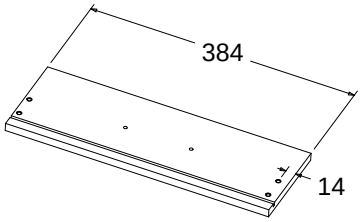

1PC

9

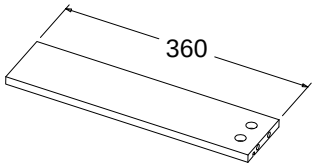

2PCS

10

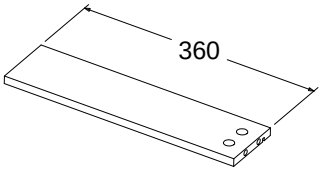

2PCS

11

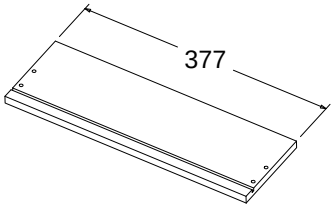

2PCS

12

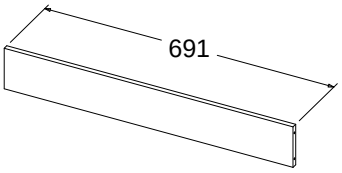

1PC

13

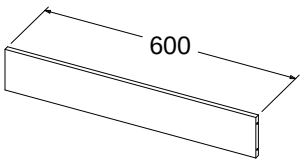

1PC

14

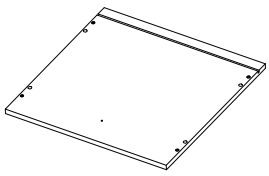

1PC

15

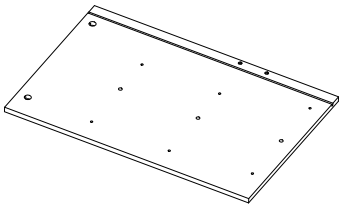

1PC

16

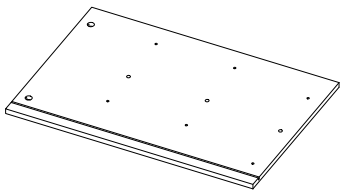

1PC

17

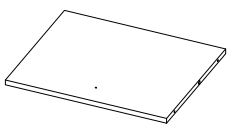

2PCS

18

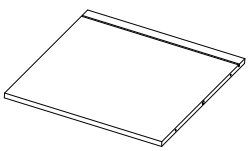

1PC

19

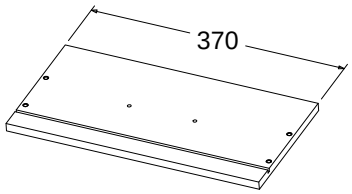

3PCS

20

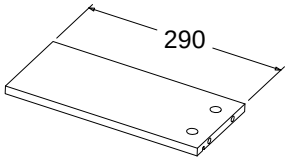

3PCS

21

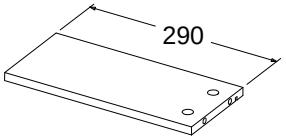

3PCS

22

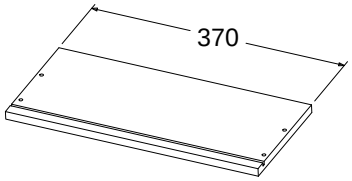

3PCS

23

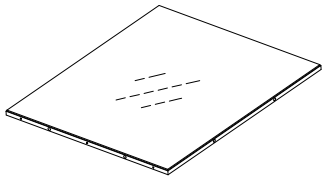

1PC

24

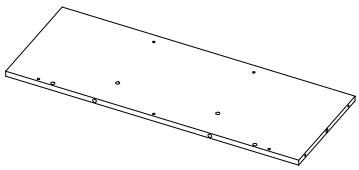

1PC

25

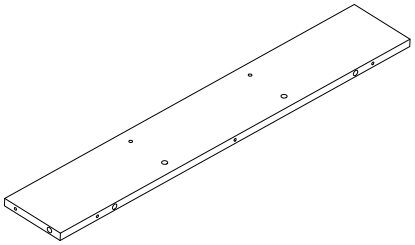

1PC

26

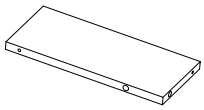

2PCS

27

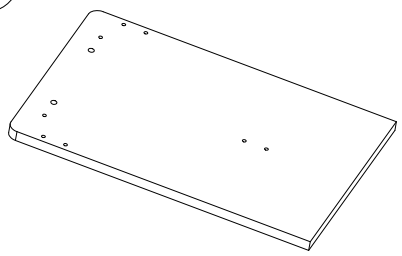

2PCS

28

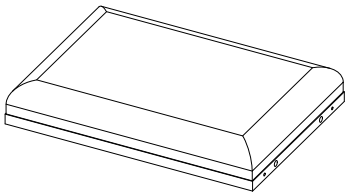

1PC

29

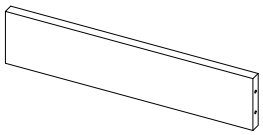

3PCS

30

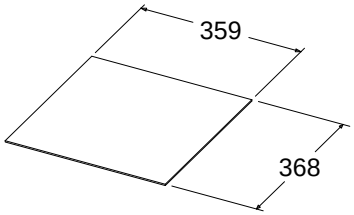

2PCS

31

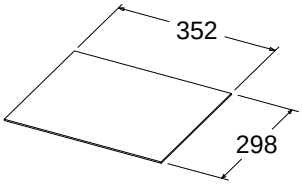

3PCS

32

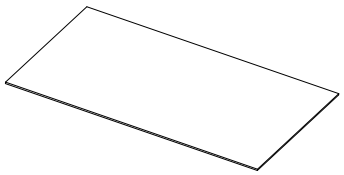

1PC

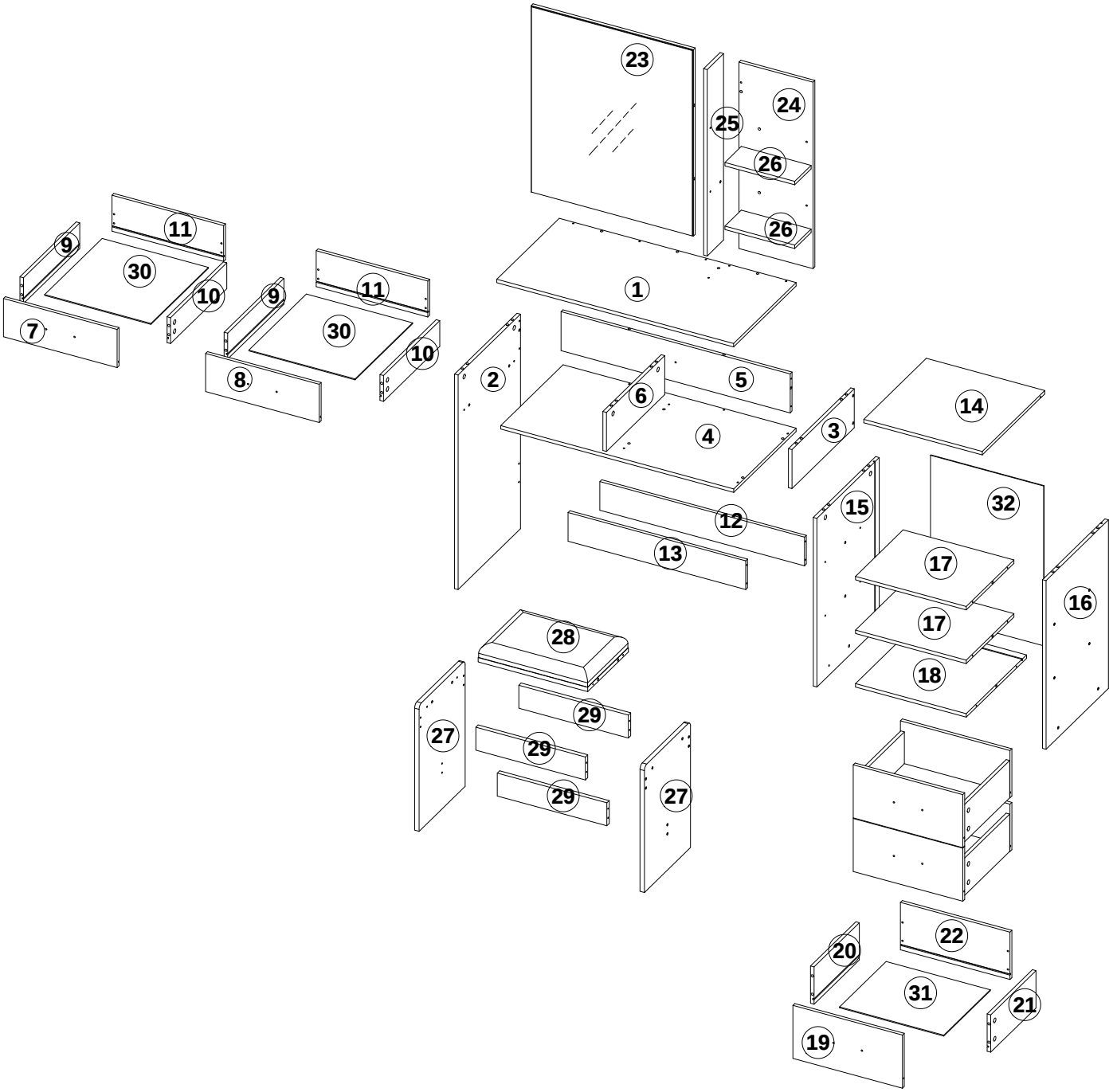
23
24
25
26
26
1
11
9
30
10
7
11
9
30
10
8
2
5
6
4
3
14
15
32
12
13
17
16
17
18
28
29
27
29
29
27
22
20
31
21
19

A x 32+1



M6x32

B x 32+1

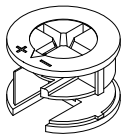

M15x9.5

C x 78+2

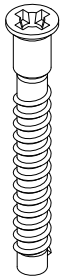

M5x40

D x 41+1



M15

E x 40+1



M8x30

F x 35+2



M3.5x12

G x 6+1

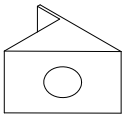

H x 5

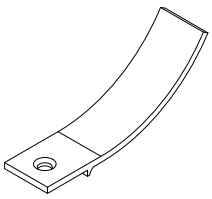

I x 5

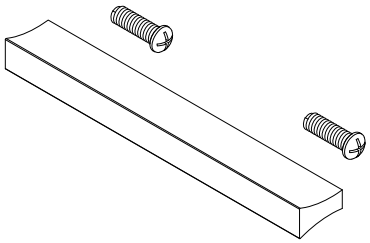

M4x15

J x 3

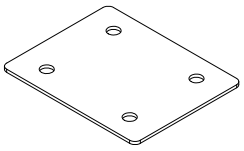

K x 2

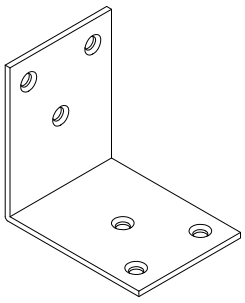

L x 1

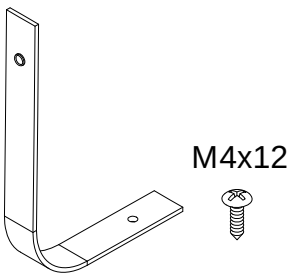

M4x12

M x 1

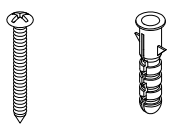

M4x35 M6x30

N x 10

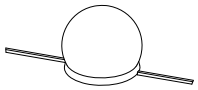

O x 10

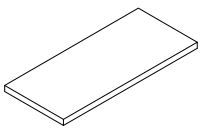

STEP 1

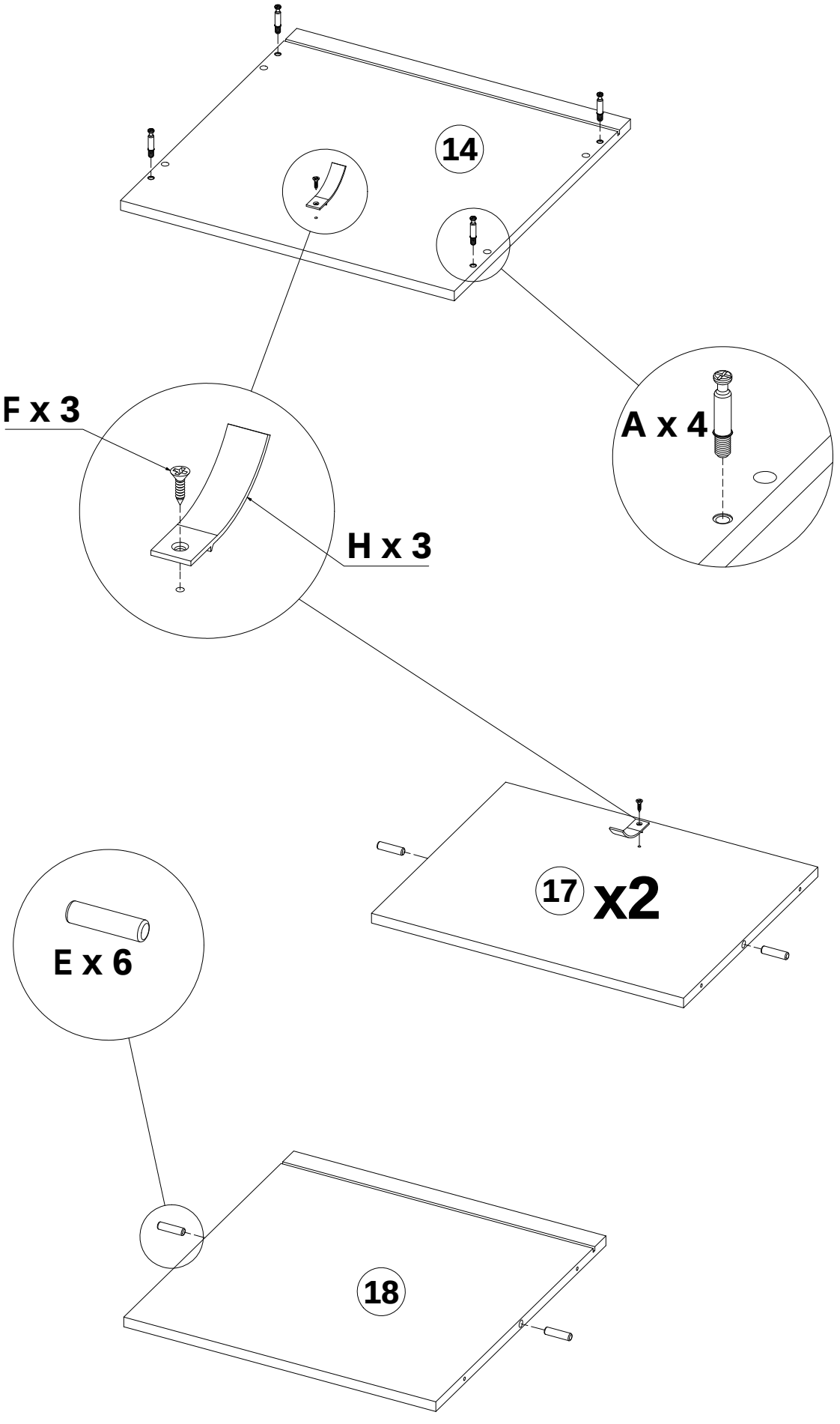

STEP 2

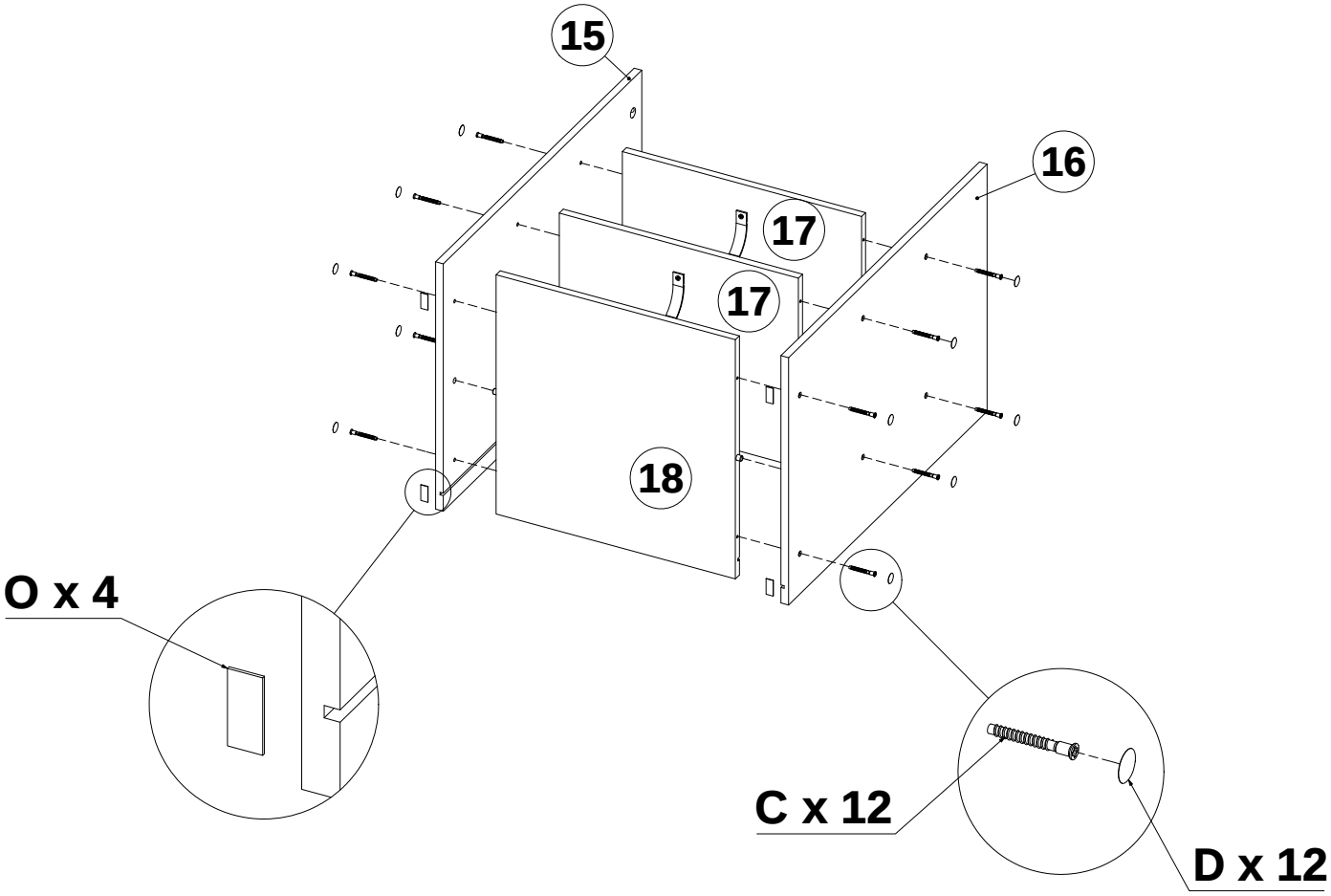

STEP 3

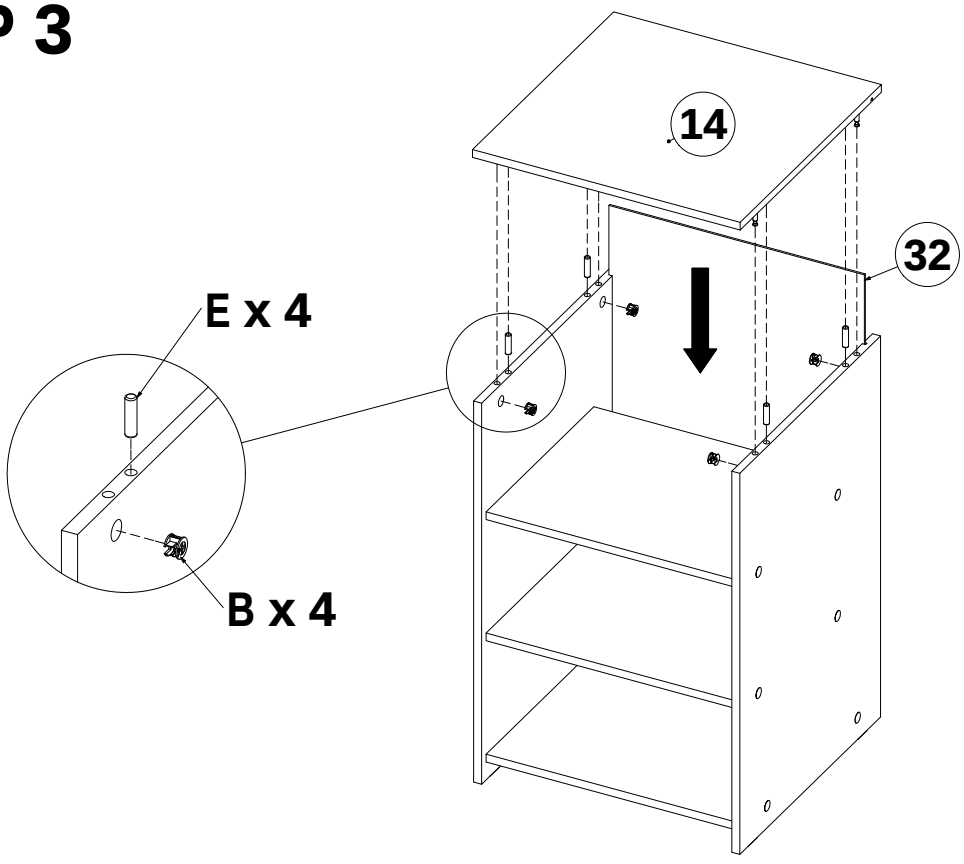

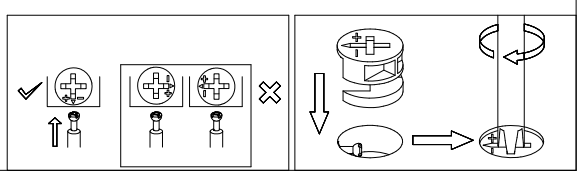

STEP 4

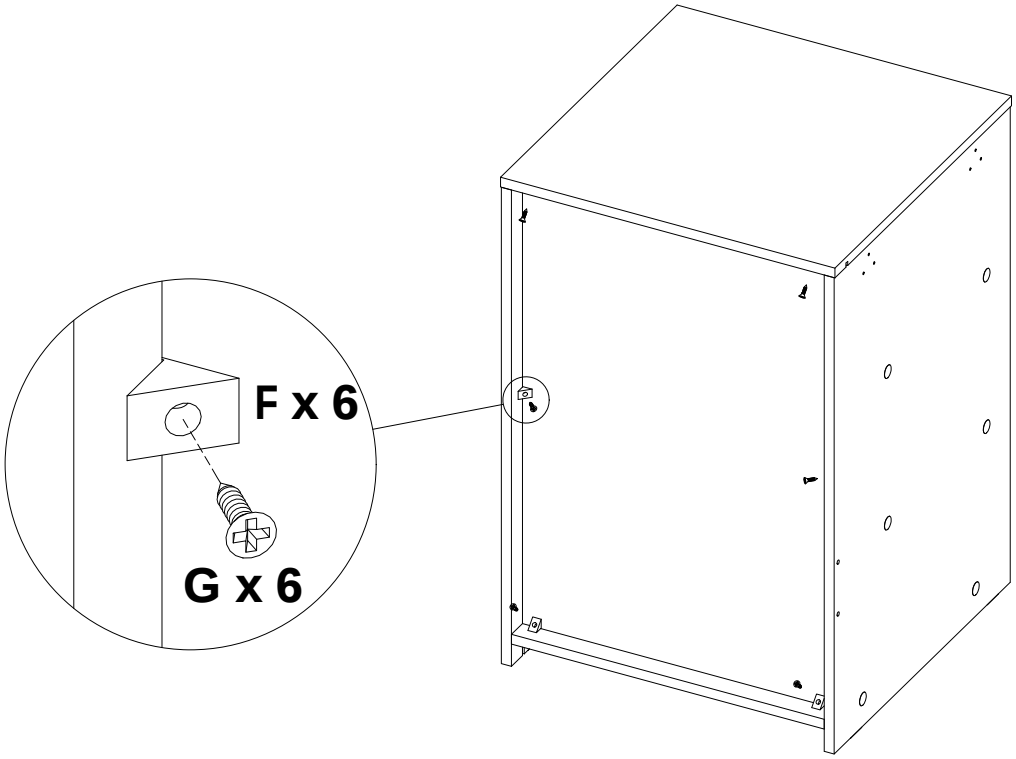

STEP 5

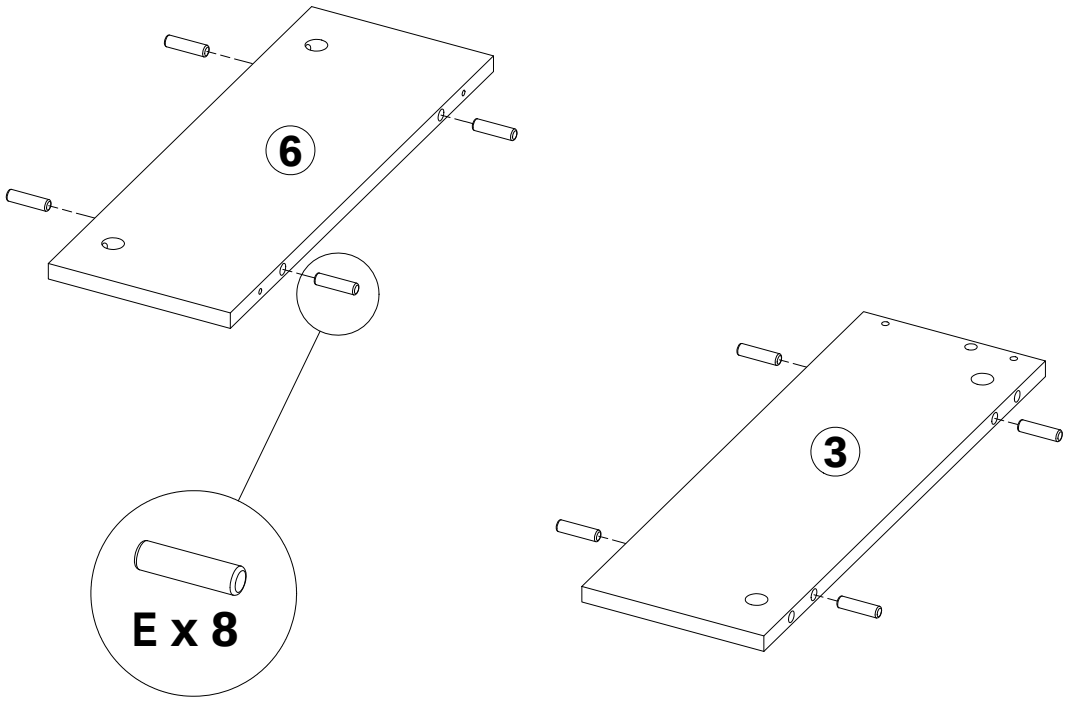

STEP 6

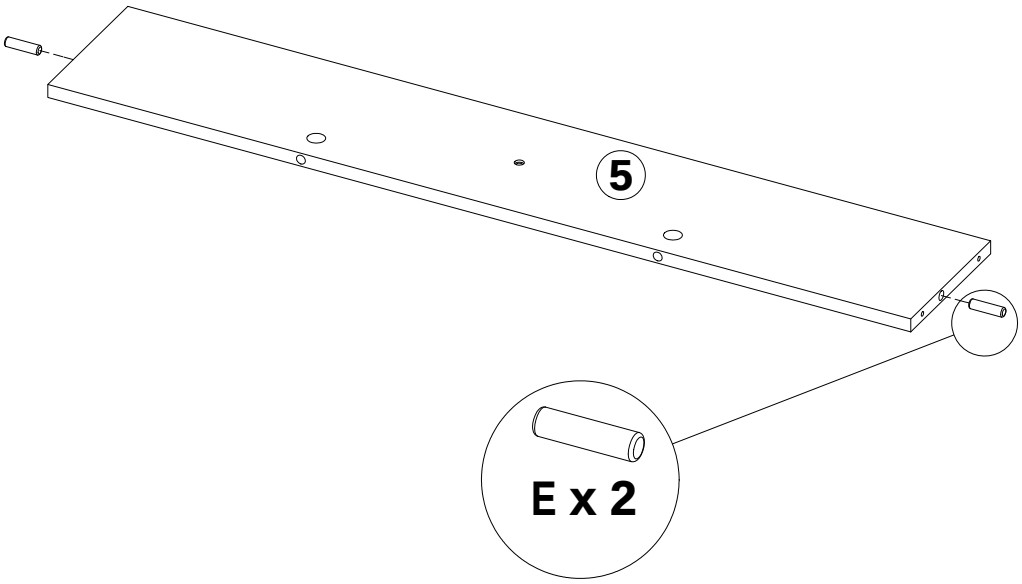

STEP 7

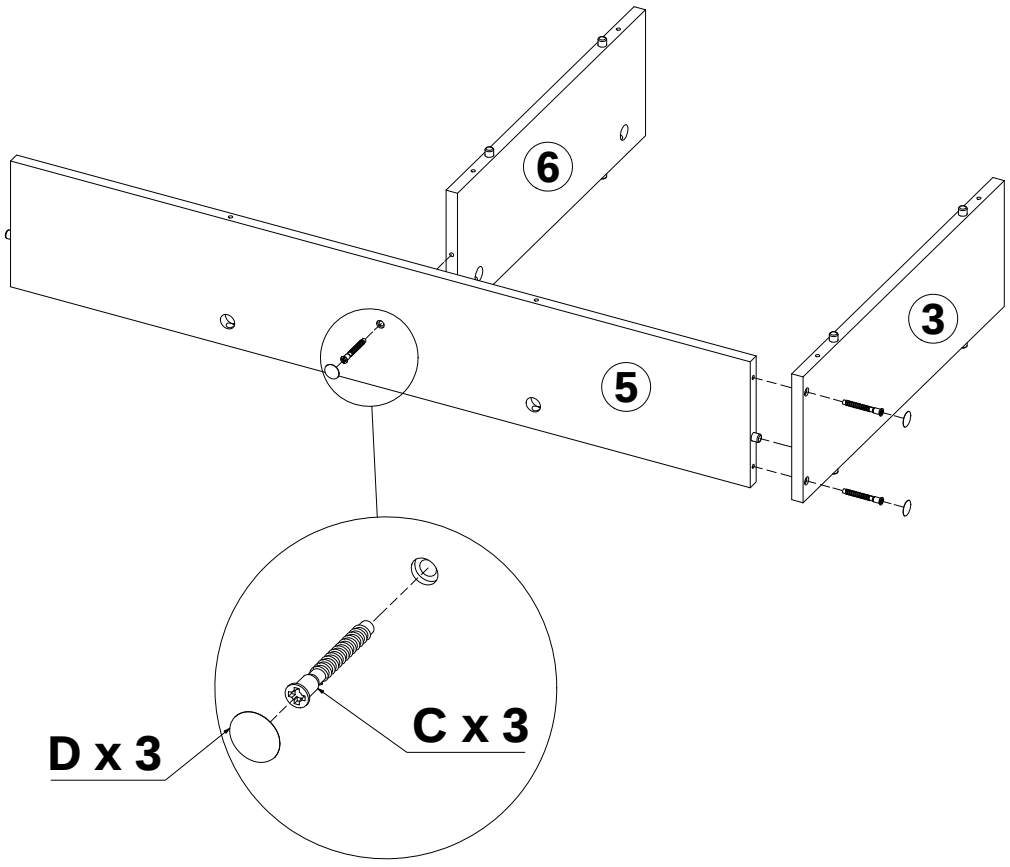

STEP 8

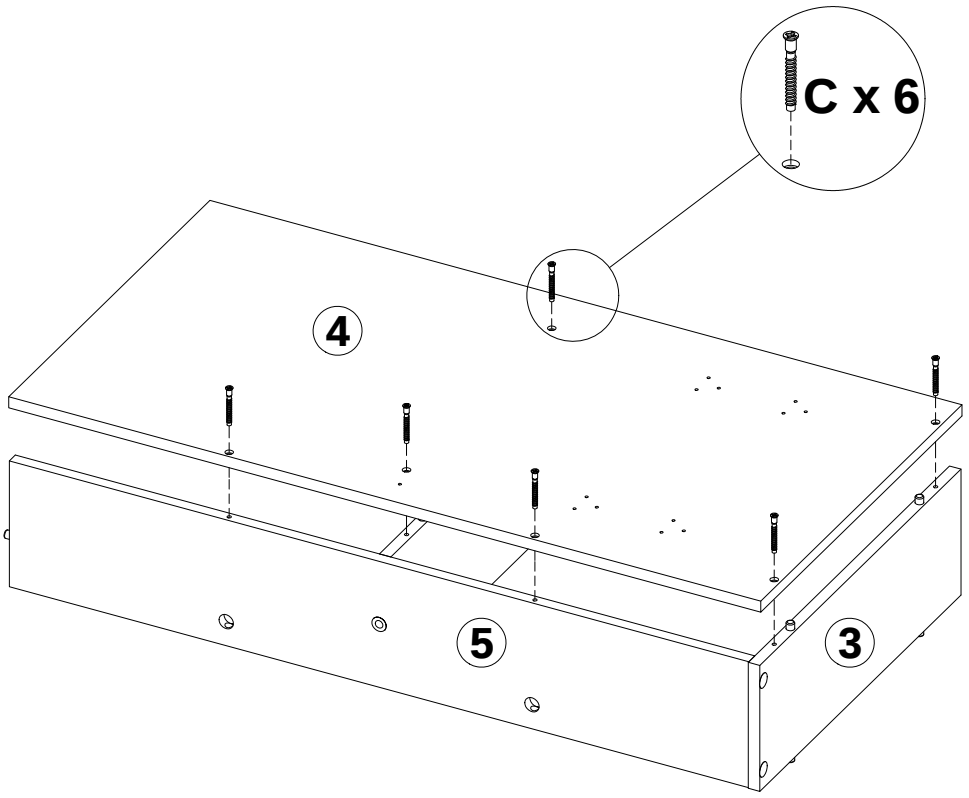

STEP 9

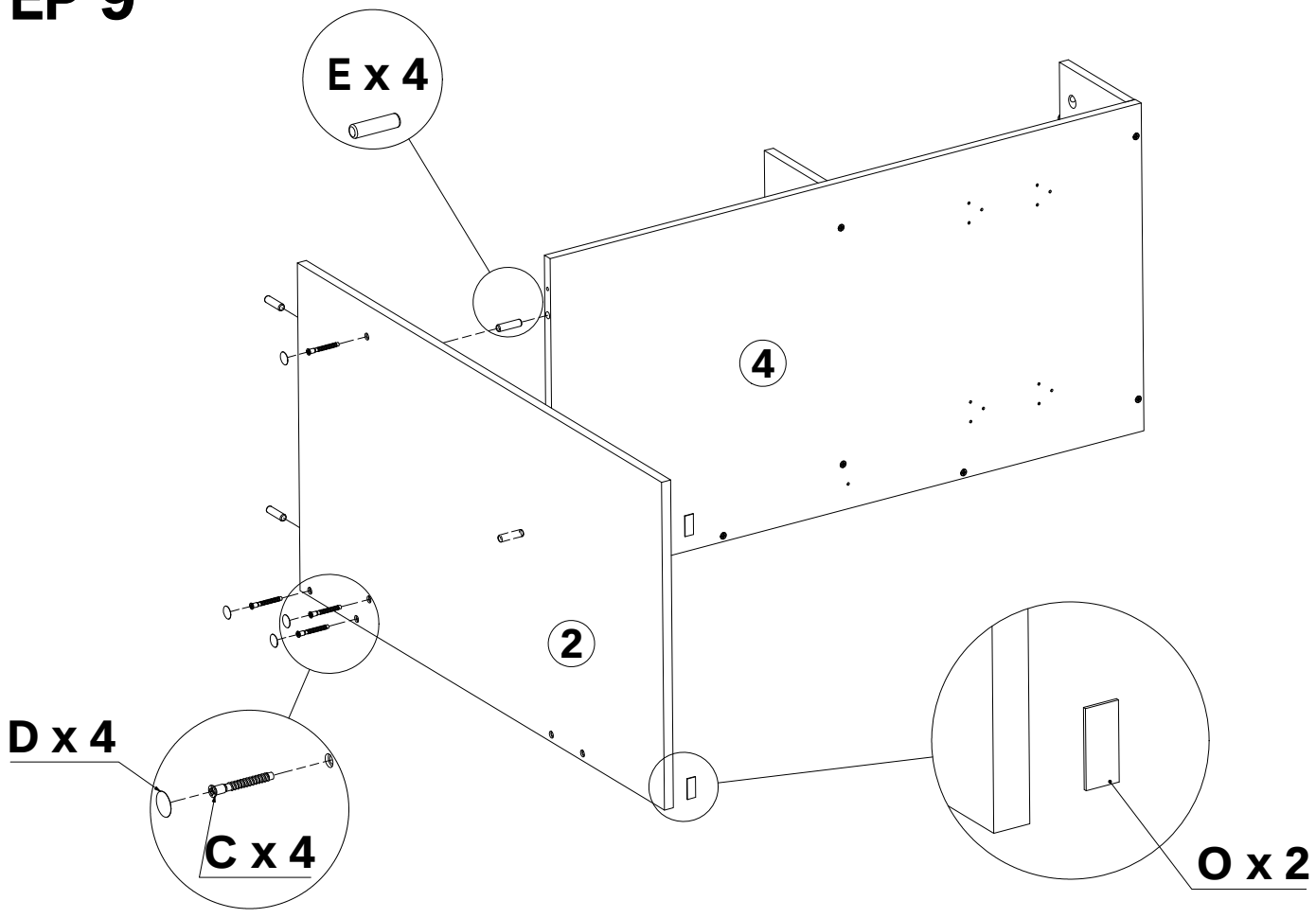

STEP 10

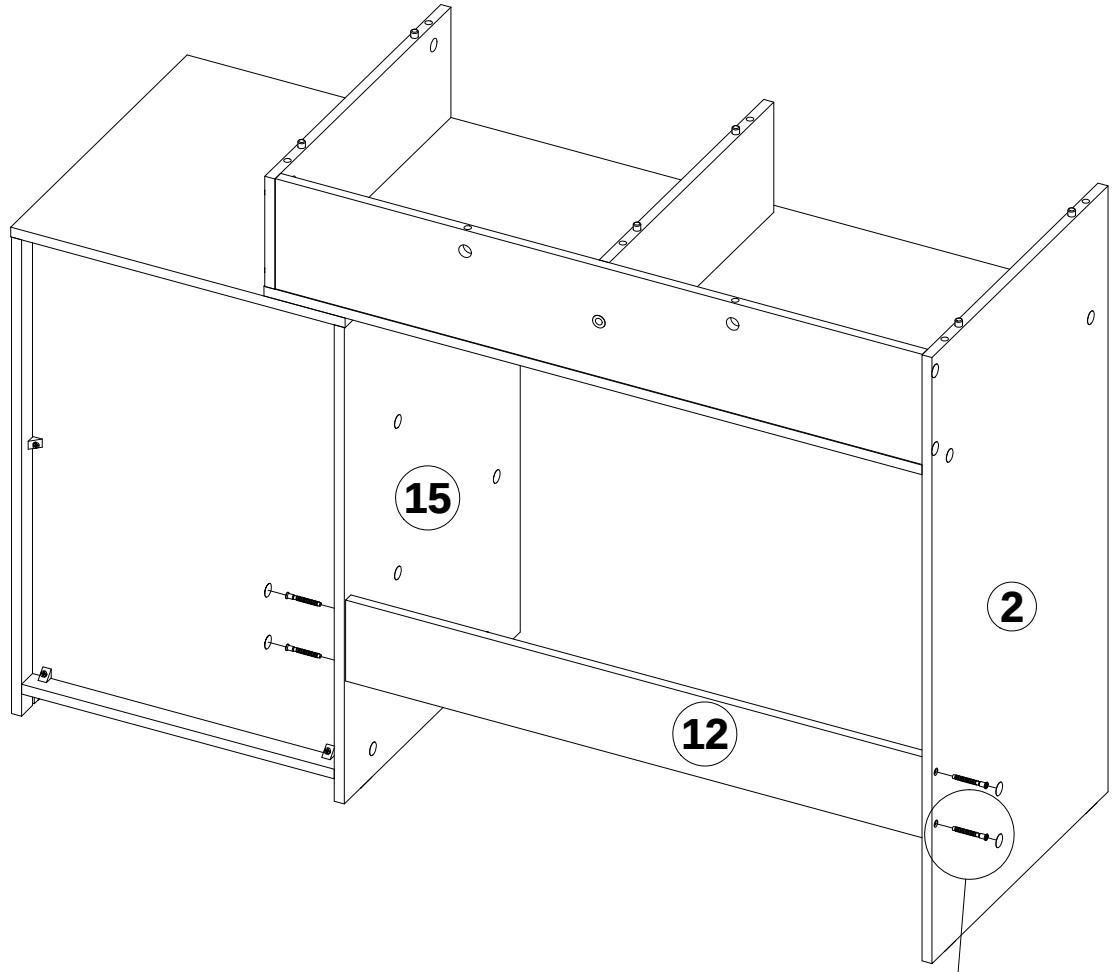

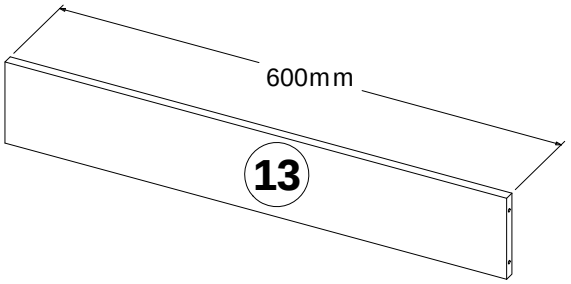

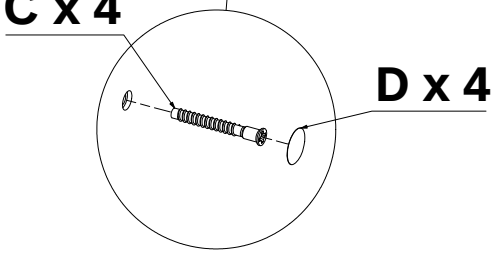

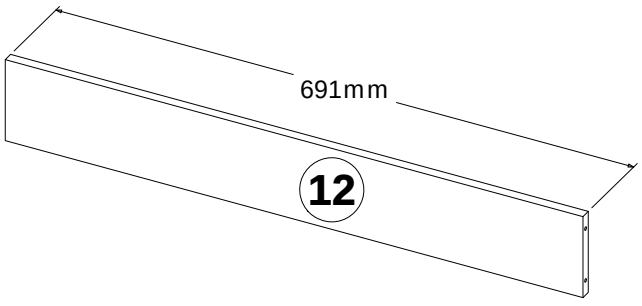

The installation of the cabinet can be adjusted in two positions,you can choose 12 or 13 to determine the cabinet position during the installation process.

STEP 11

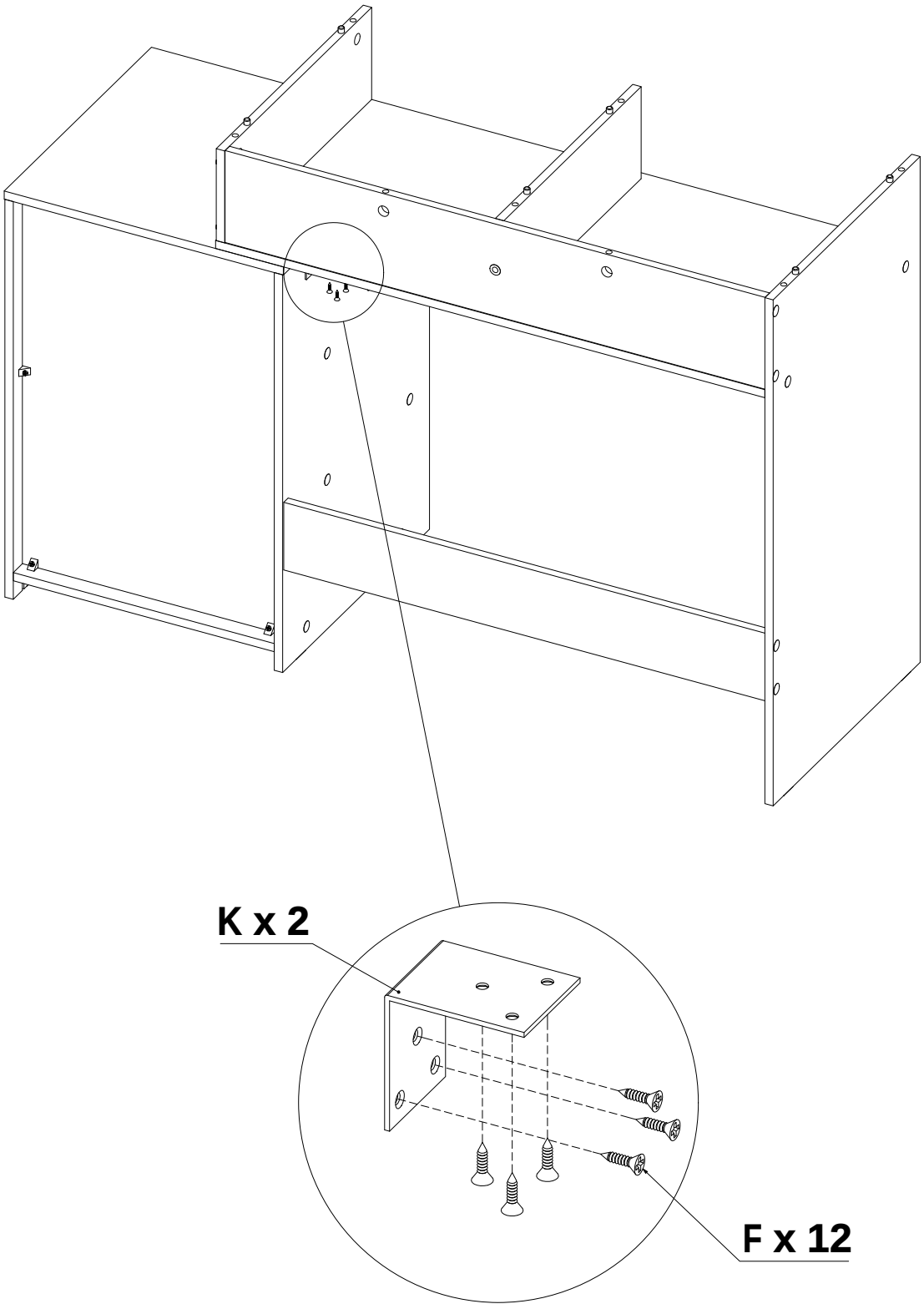

STEP 12

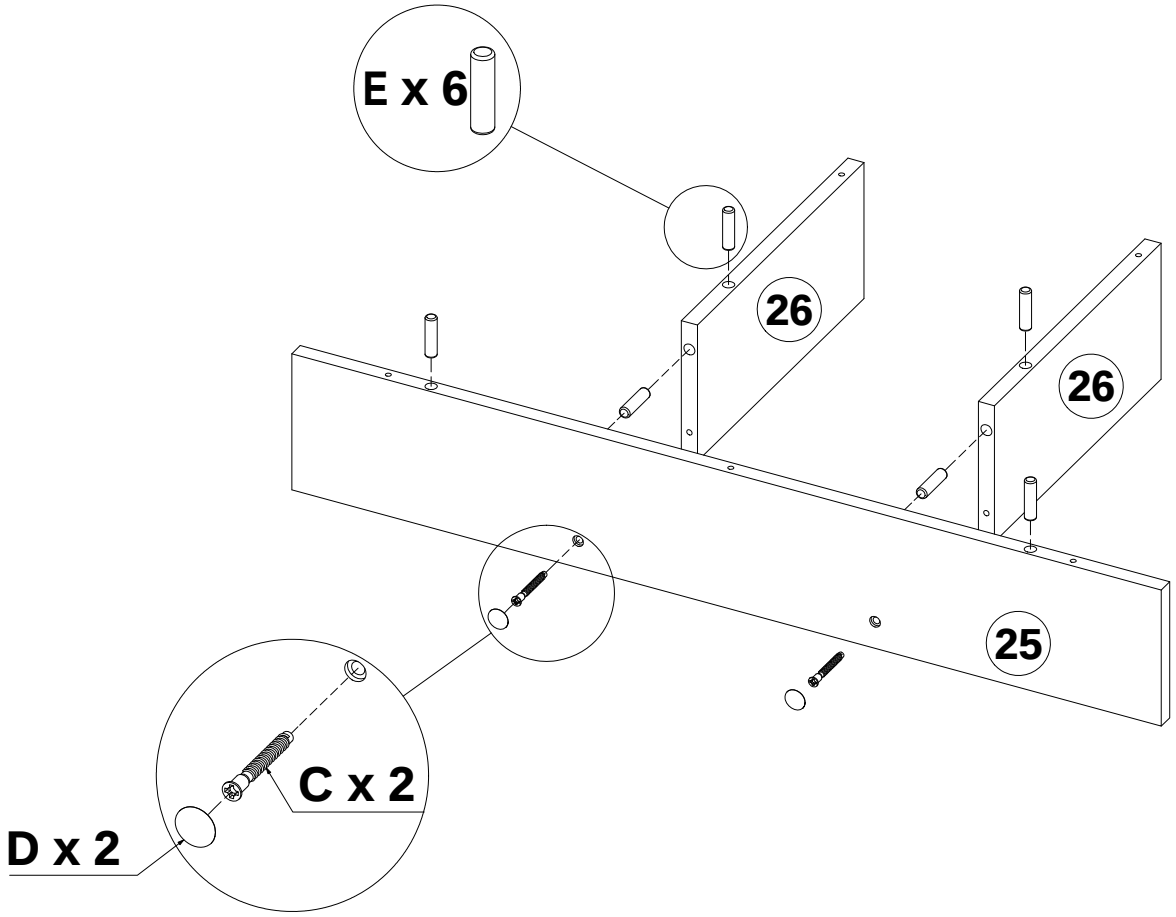

STEP 13

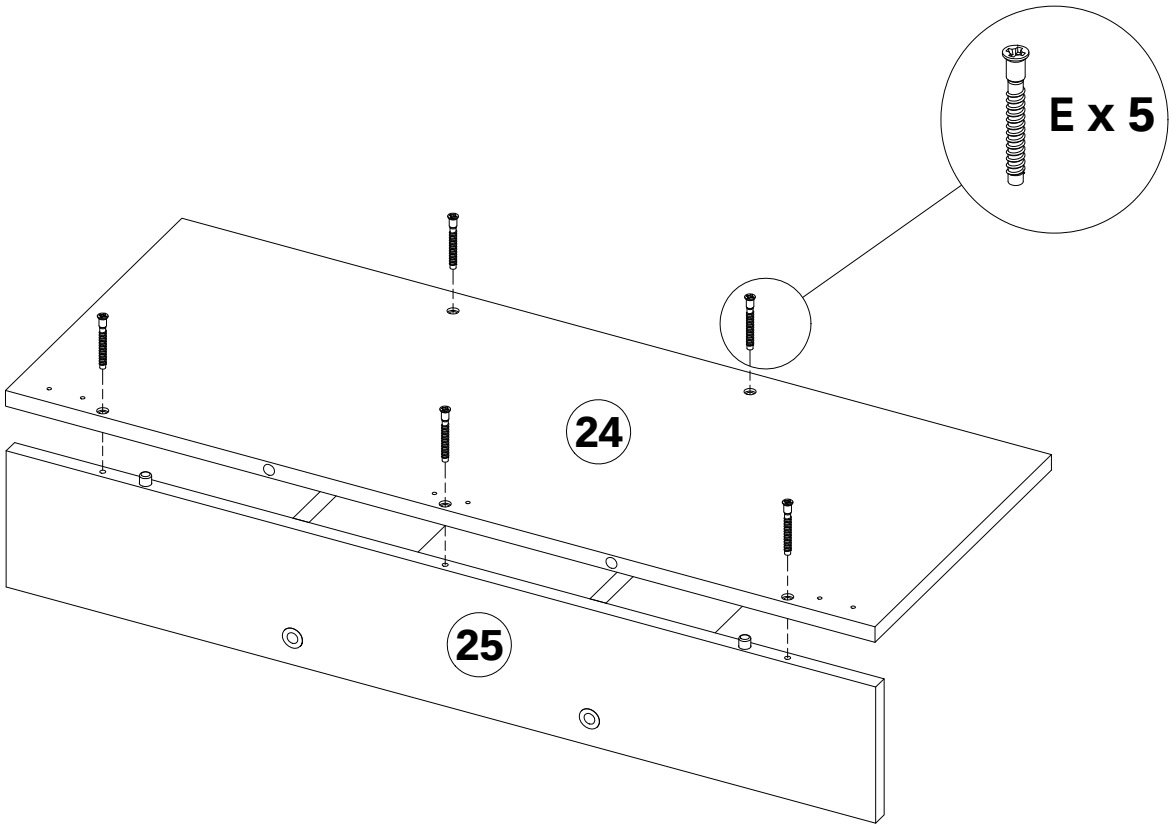

STEP 14

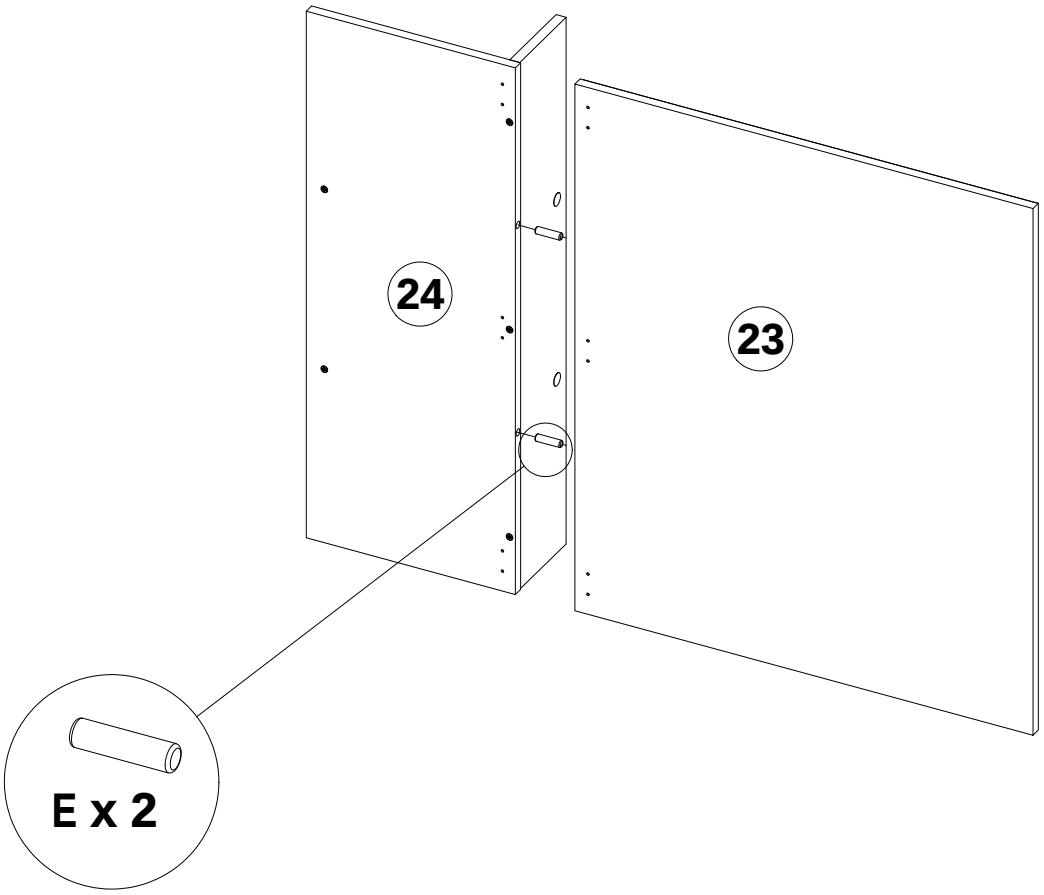

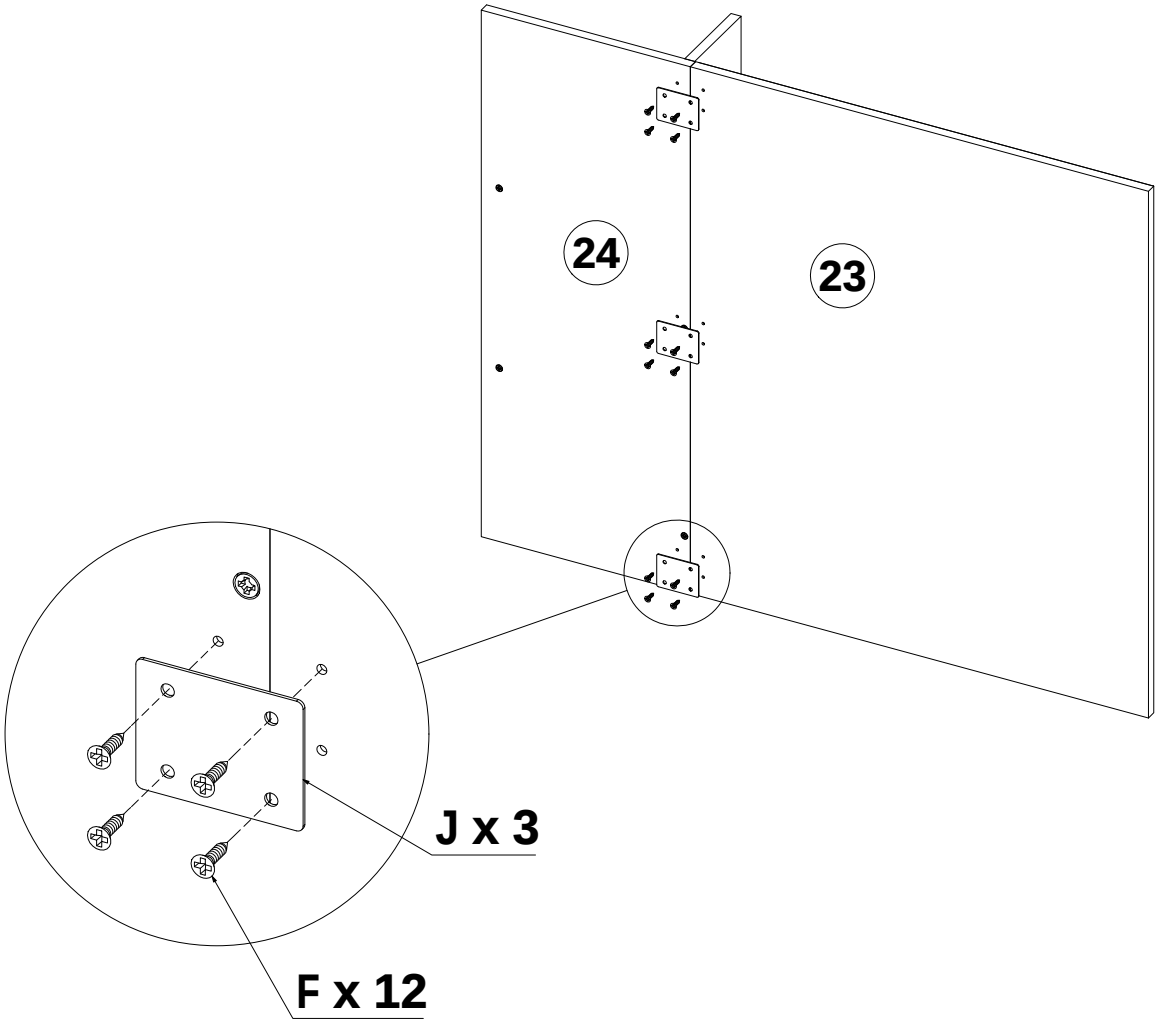

STEP 15

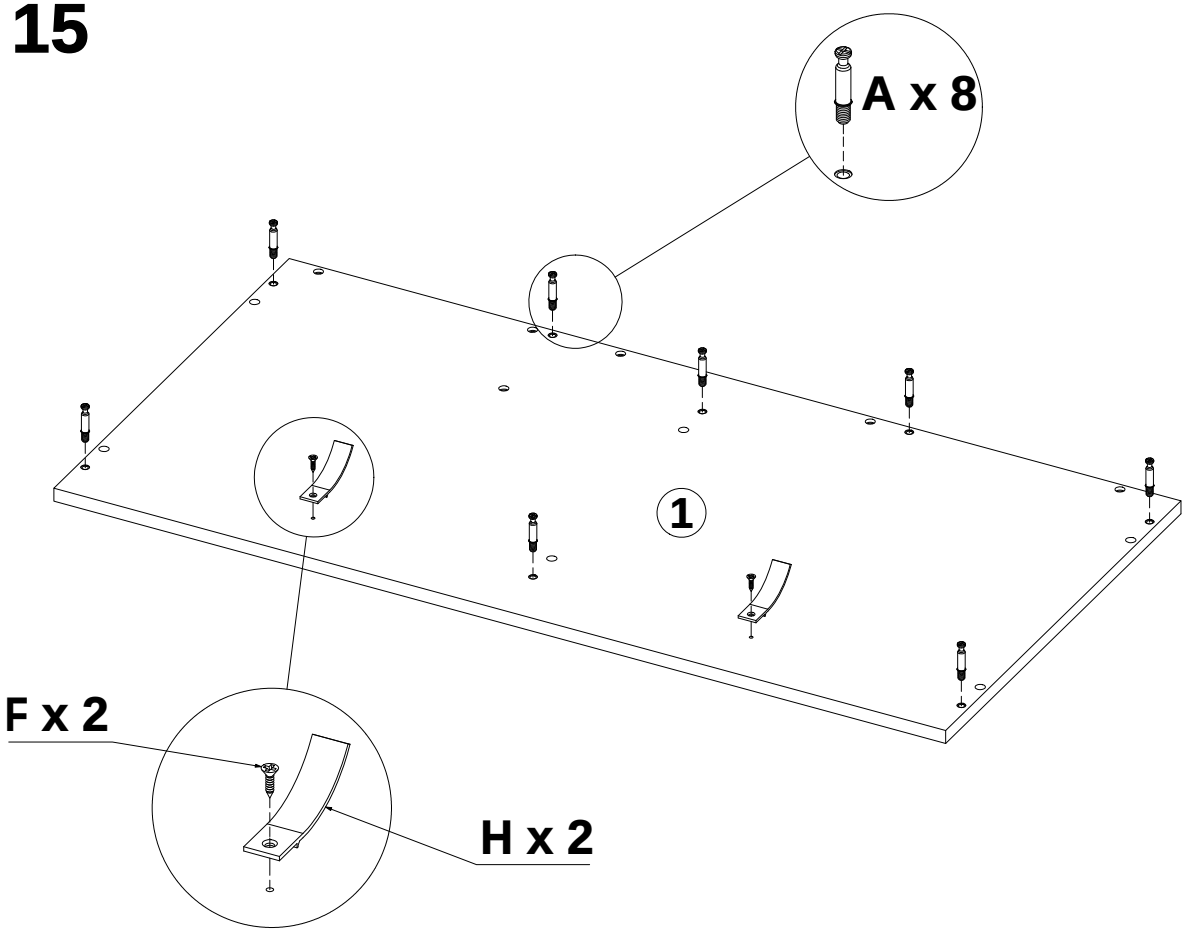

STEP 16

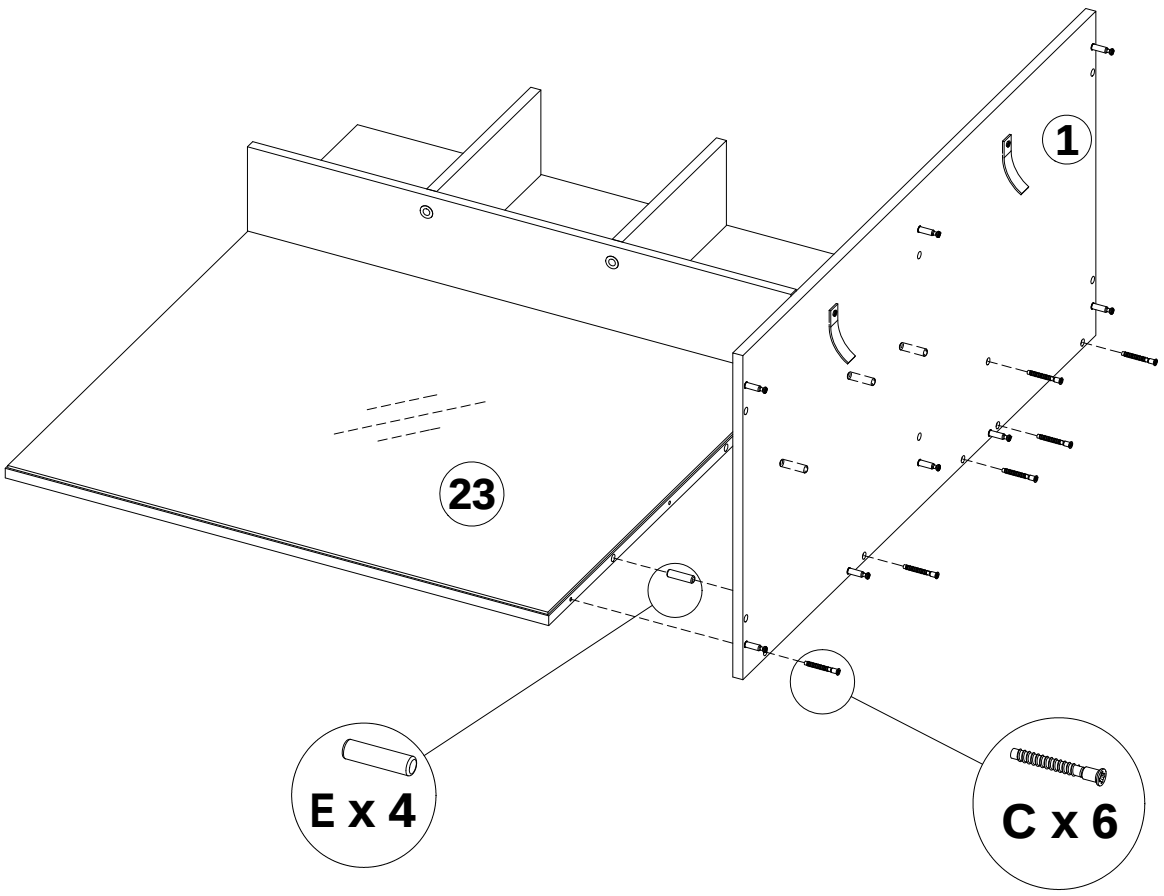

STEP 17

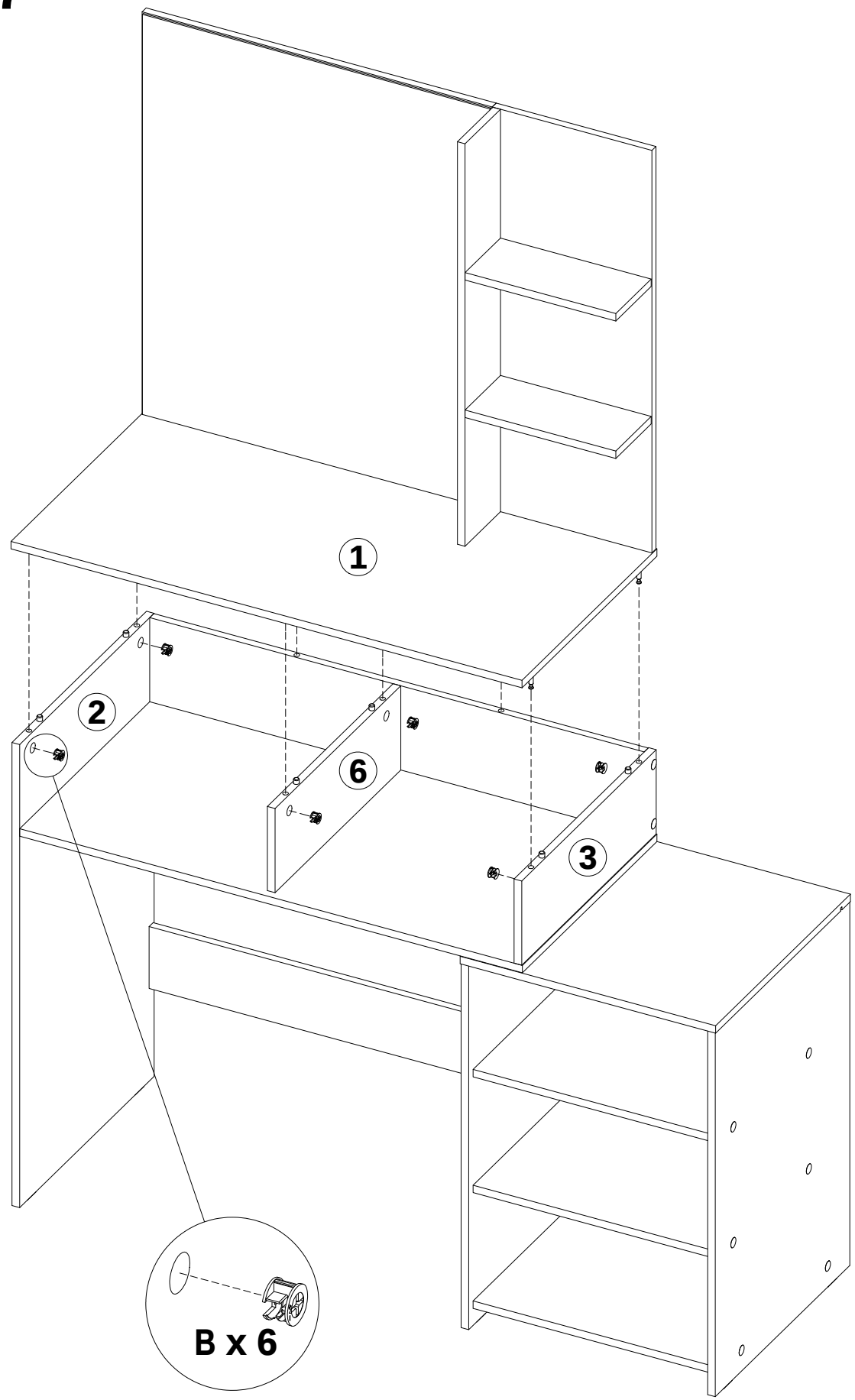

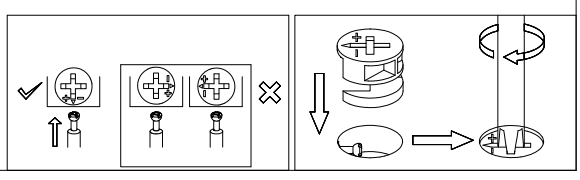

STEP 18

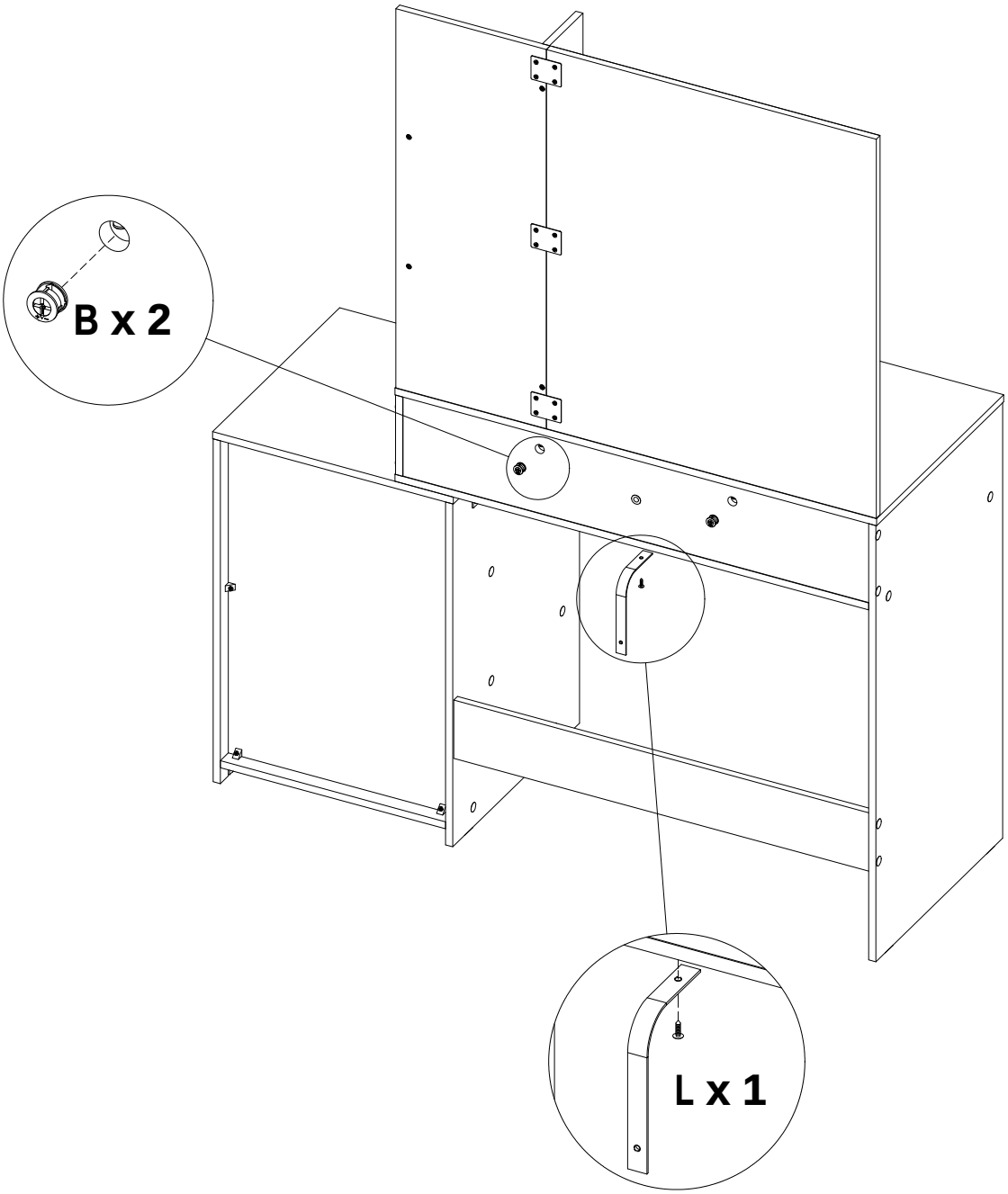

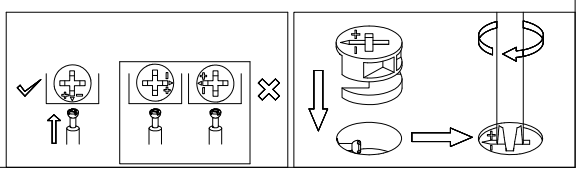

STEP 19

X2

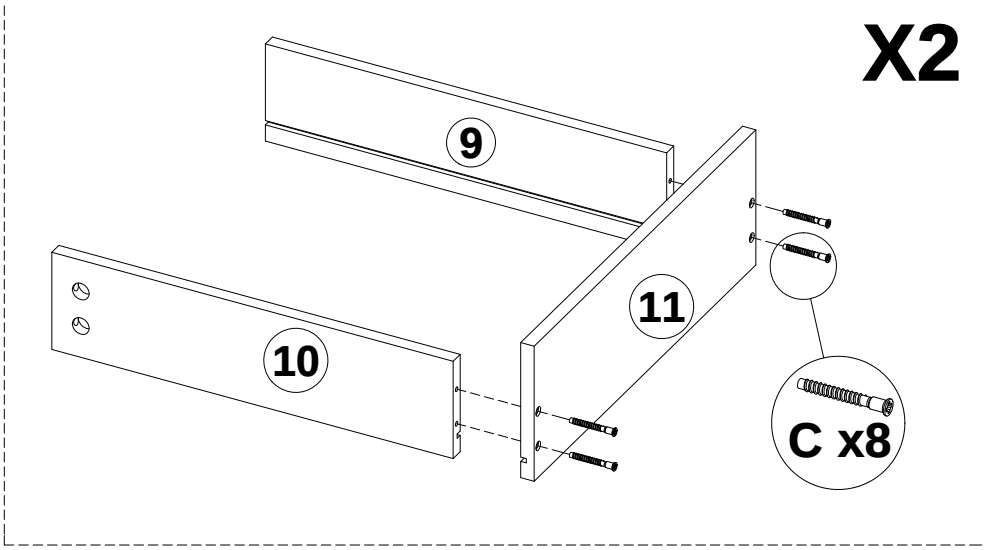

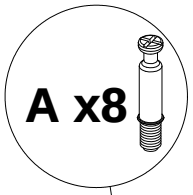

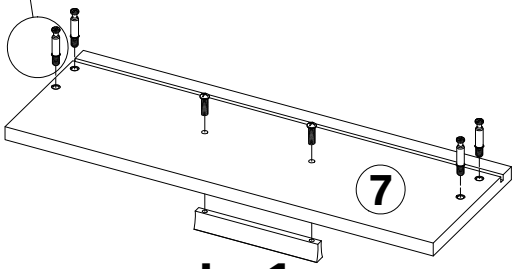

I x 1

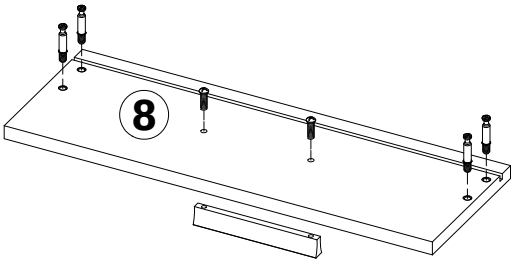

I x 1

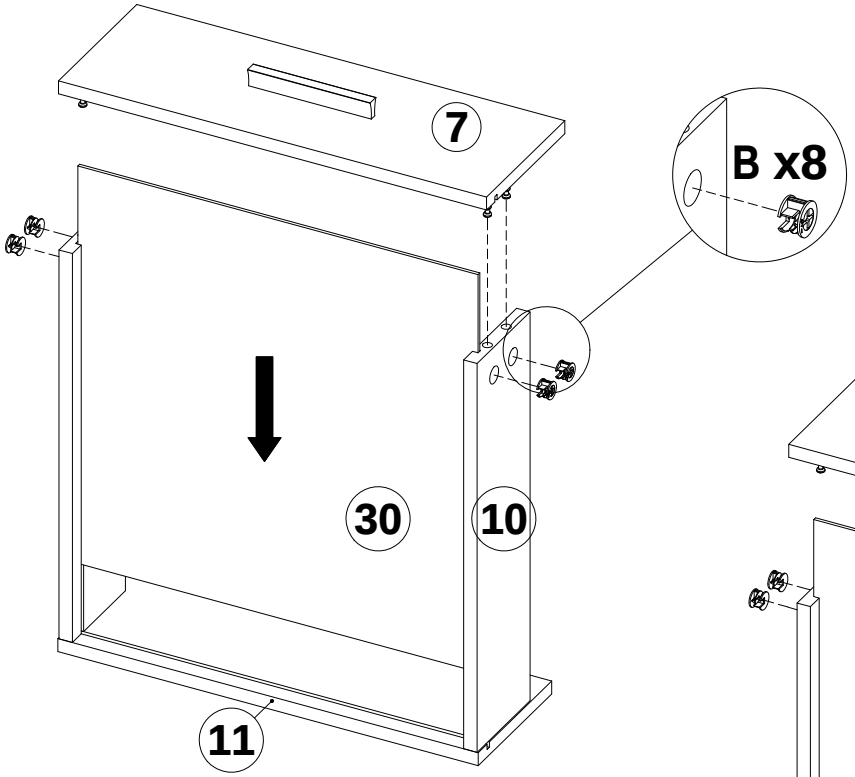

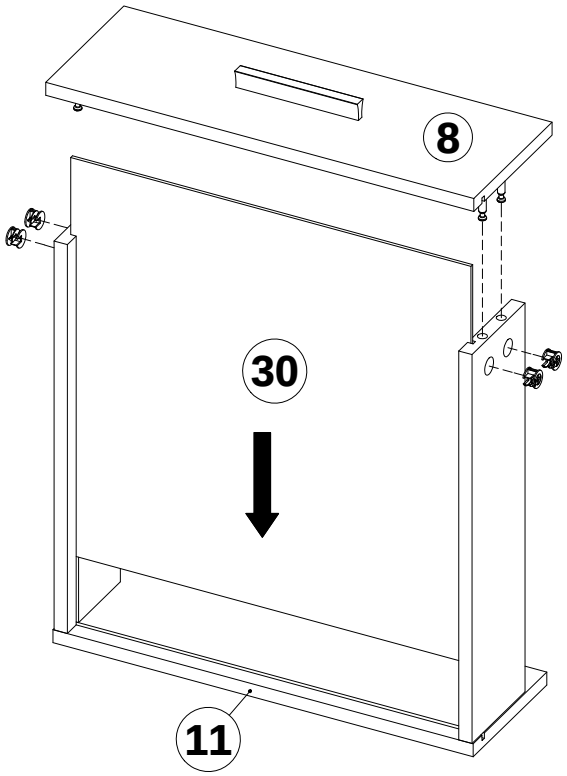

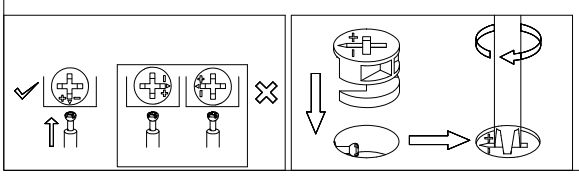

STEP 20

X3

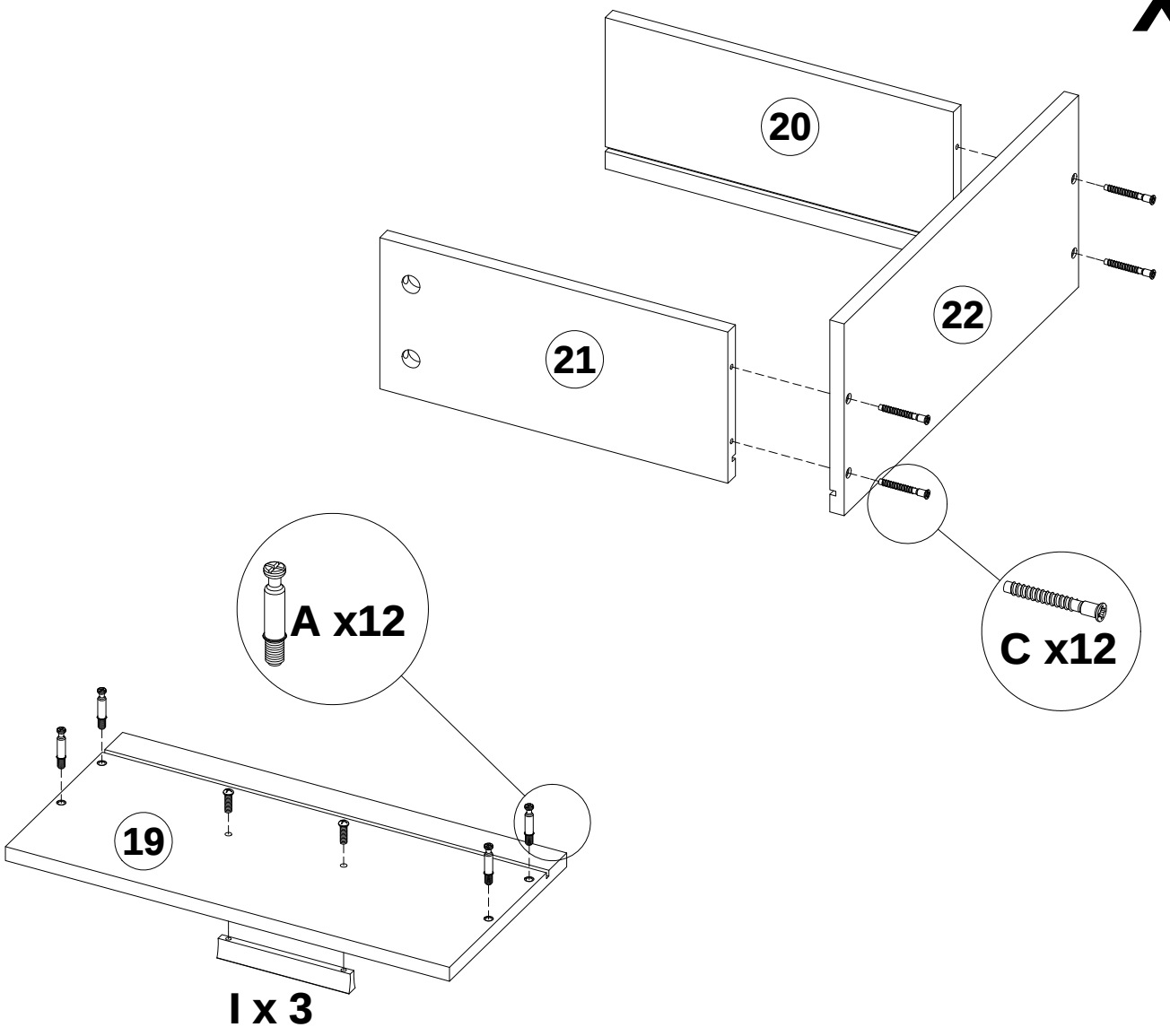

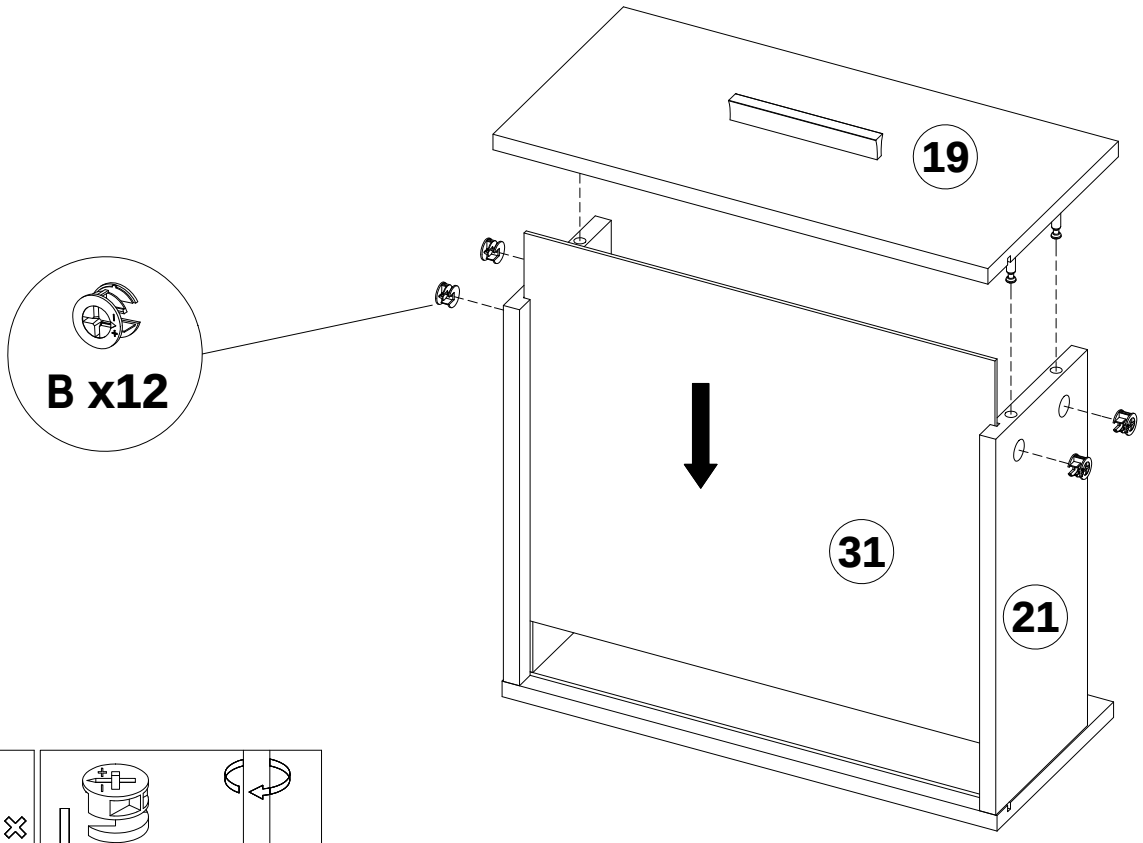

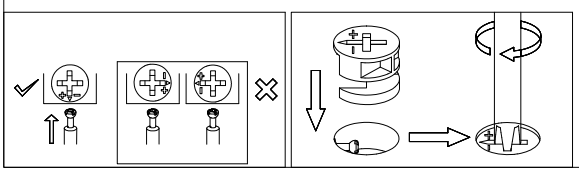

STEP 21

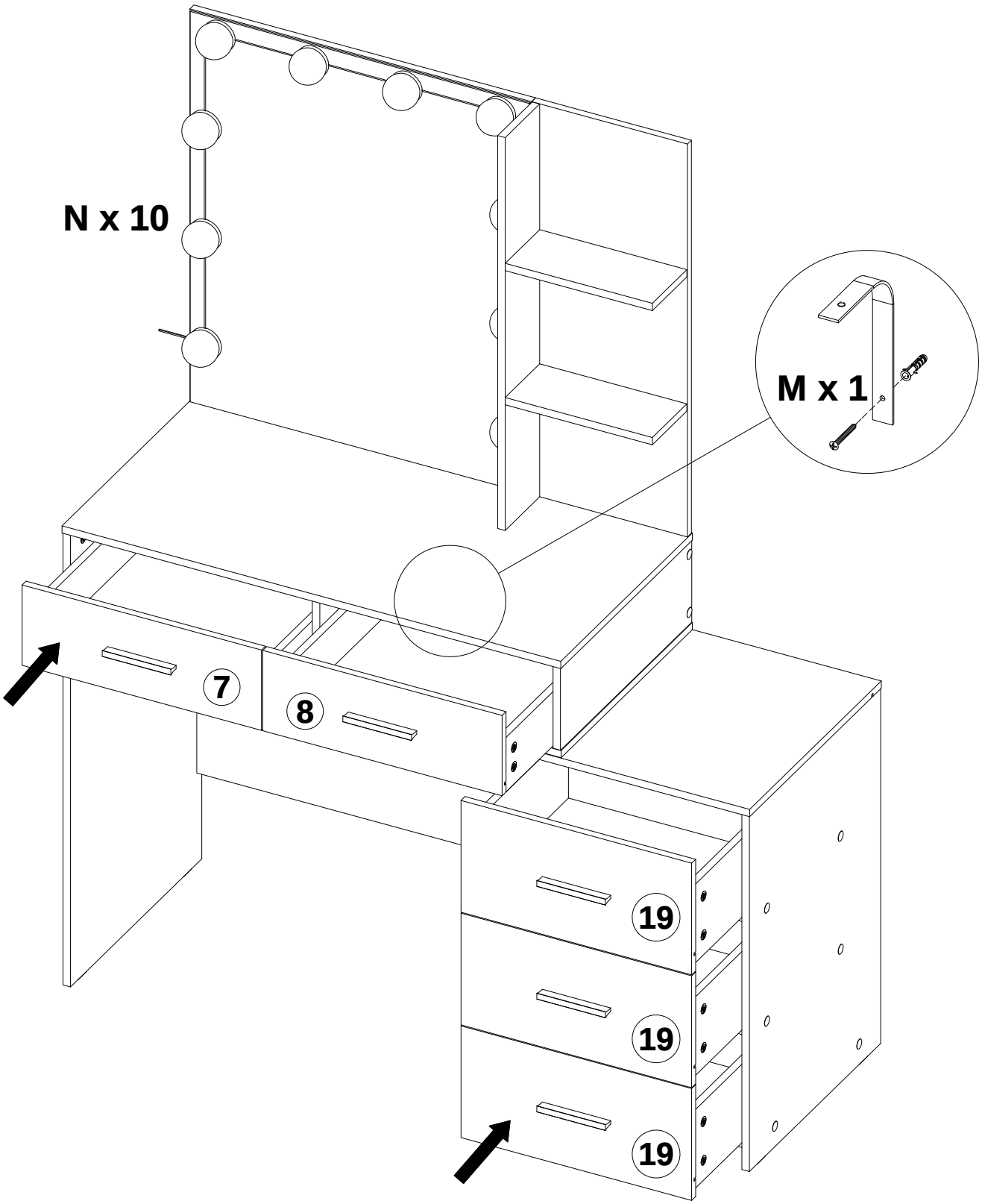

STEP 22

