INSTALLATION

Product Manual

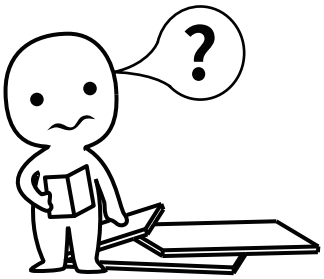

IMPORTANT INFORMATION!

please read the entire manual before starting to assemble and/or using this product.follow the manual thoroughly and keep it for further reference.

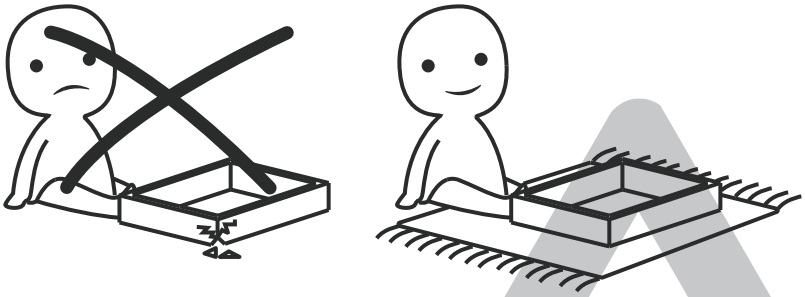

AVOID SCRATCHES!

In order to avoid scratching this furnuture should be assembled on a soft layer-could be a rug.

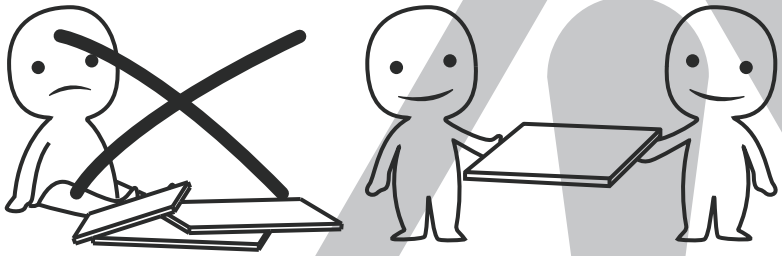

IMPROVE EFFICIENCY !

Try to find a partner to install with you, which can speed up the installation efficiency and shorten the time.

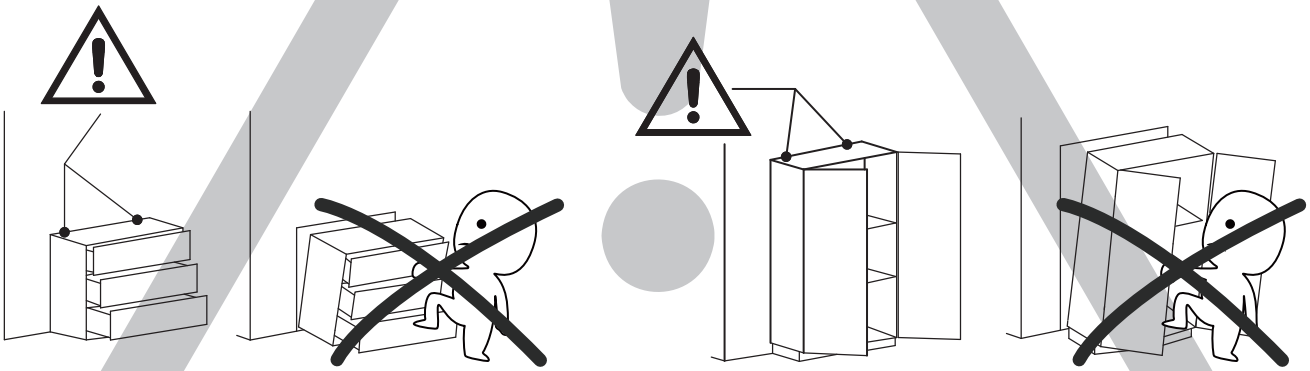

ANTI-TOPPLE WARNING !

Overturned furniture can cause serious or fatal crush injuries. To prevent tipping over, be sure to use the wall attachment, if not included with this product. Please purchase the wall attachment that fit your wall. If unsure, seek professional advice. Please read and follow each step of the instructions carefully.

IMPORTANT !

It is important that any product which is assembled using any kind of screw is re-tightened 2 weeks after assembly,and once every 3 months - in order to assure stability through-out the lifespan of the product.

For regular maintenance and cleaning of the product, for the frame, please use a rag dipped in neutral detergent to fully wipe it, and then dry it with a clean rag.For glass materials, wipe with a rag dampened with water glass cleaner, and then dry with a dry rag.

Do not use an electric screwdriver, and do not use too much force when installing, because the board is easy to break.

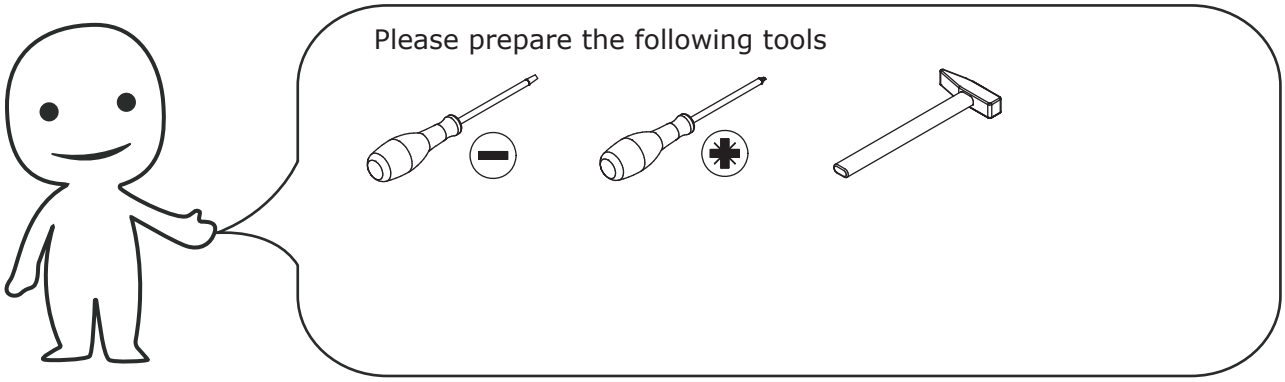

When installing, please carefully confirm whether each screw corresponds to the manual, accessories with similar shapes can be distinguished by size

A x 76	B x 76	C x 8	D x 48
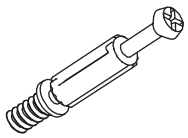 CRA0635A	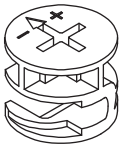 CRB1595A	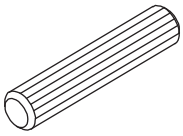 CRF0630A	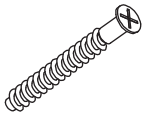 CRC0540A

E x 98	F x 8	17
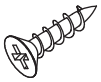 CRD3512A	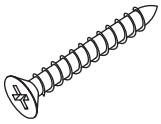 CRD3520A	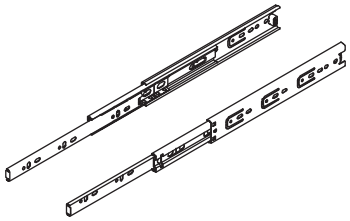 14"(3508) 12 SETS

G x 2	H x 2	I x 2
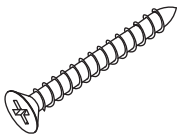 CRD3535A		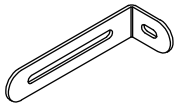

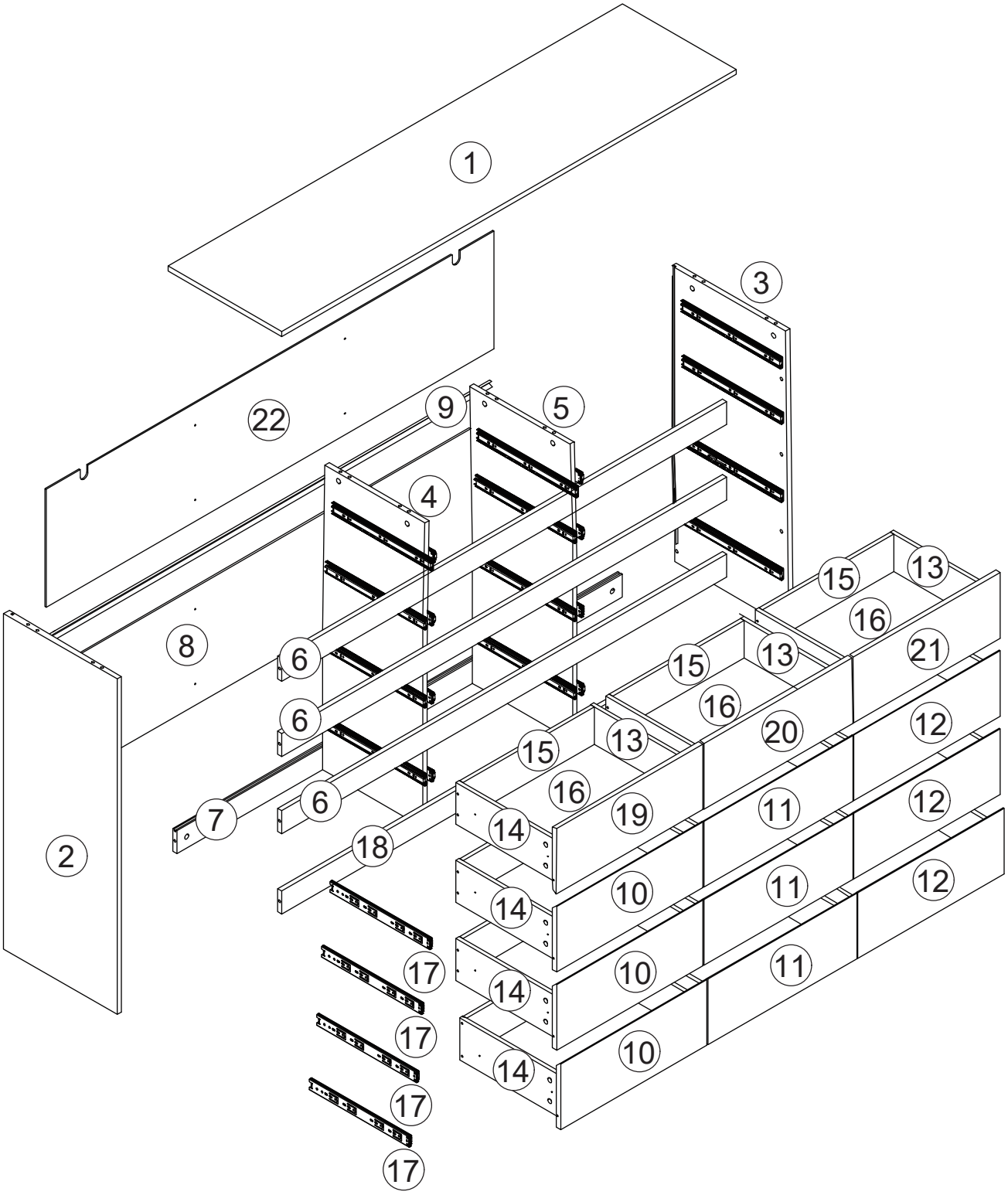

⚠WARNING

Children have died from furniture tipover.To reduce the risk of furniture tipover:

- ALWAYS install tipover restraint provided.
- NEVER put a TV on this product.
- NEVER allow children to stand,climb or hang on drawers,doors,or shelves.
- NEVER open more than one drawer at a time.
- Place heaviest items in the lowest drawers.

This is a permanent label.
Do not remove!

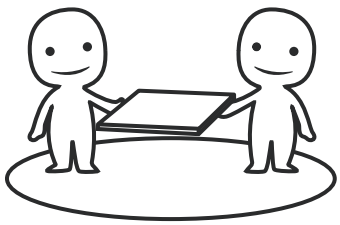

ASSEMBLED BY 2 ADULTS

Slides Must Be Separated Before Assembly.
After Separated, Set Aside Until Needed for Assembly.

Las diapositivas deben separarse antes del montaje.
Después de la separación, déjelo a un lado hasta que sea necesario.

Les glissières doivent être séparées avant l'assemblage.
Après la séparation, mettez de côté jusqu'au moment de l'assemblage.

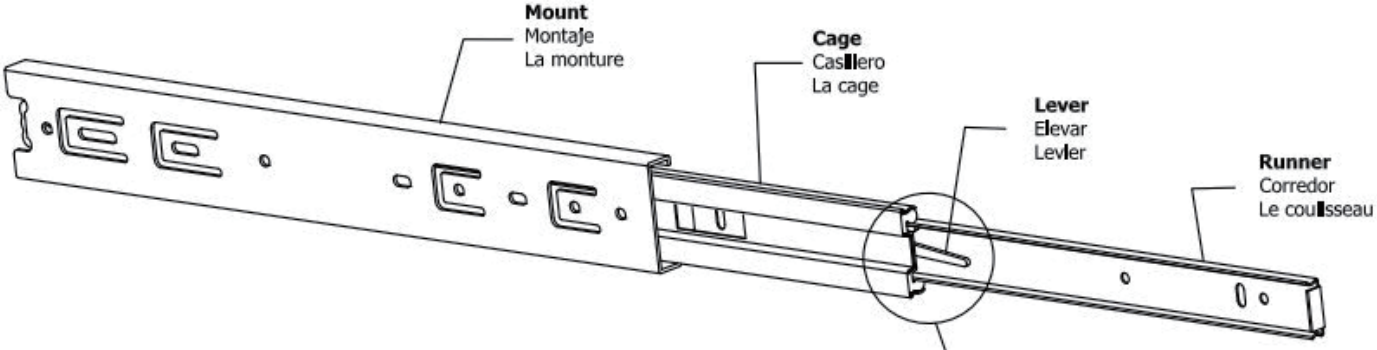

STEP 1: Extend Slide
Extender la diapositiva
Extendre la diapositive

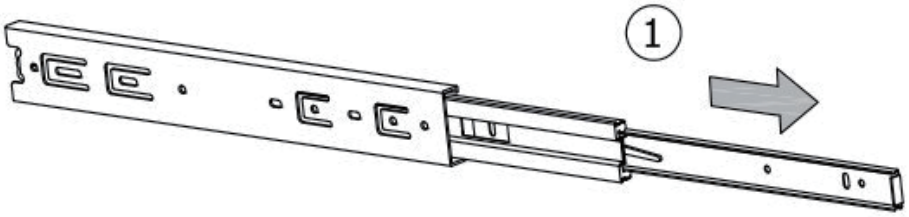

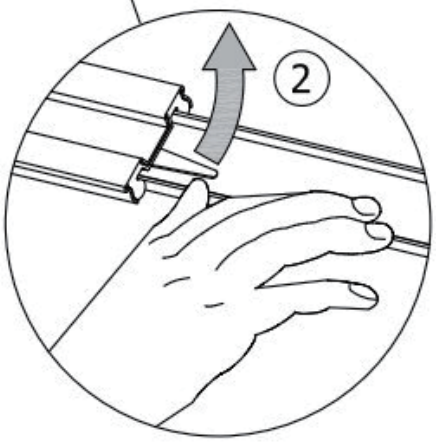

STEP 2: Push Lever UP
Empujar hacia arriba
Lever le levier

STEP 3: Remove Runner
Quitar el corredor
Enlever le coureur

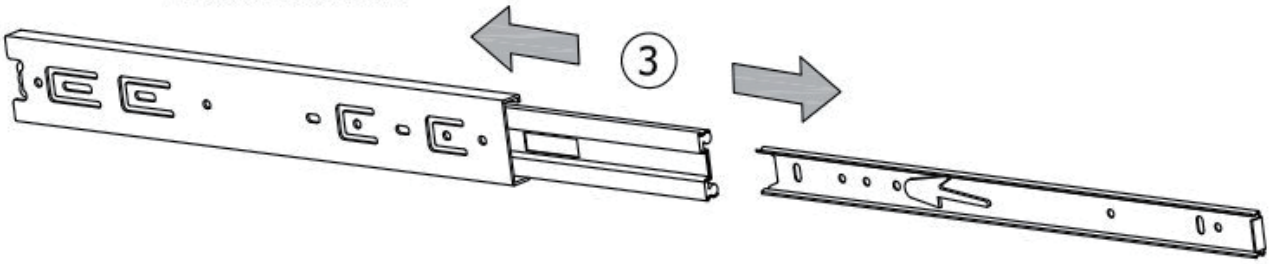

1

A x 5	E x 8
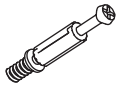	
CRA0635A	CRD3512A

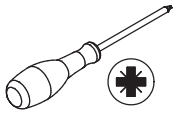

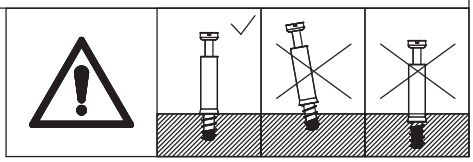

Insert quickfit screw(A) to part 2.Fix slide rail 17 to part 2 using screw(E) as shown.
Please pay attention to the holes where the accessories are inserted and don't use an electricscrewdriver.

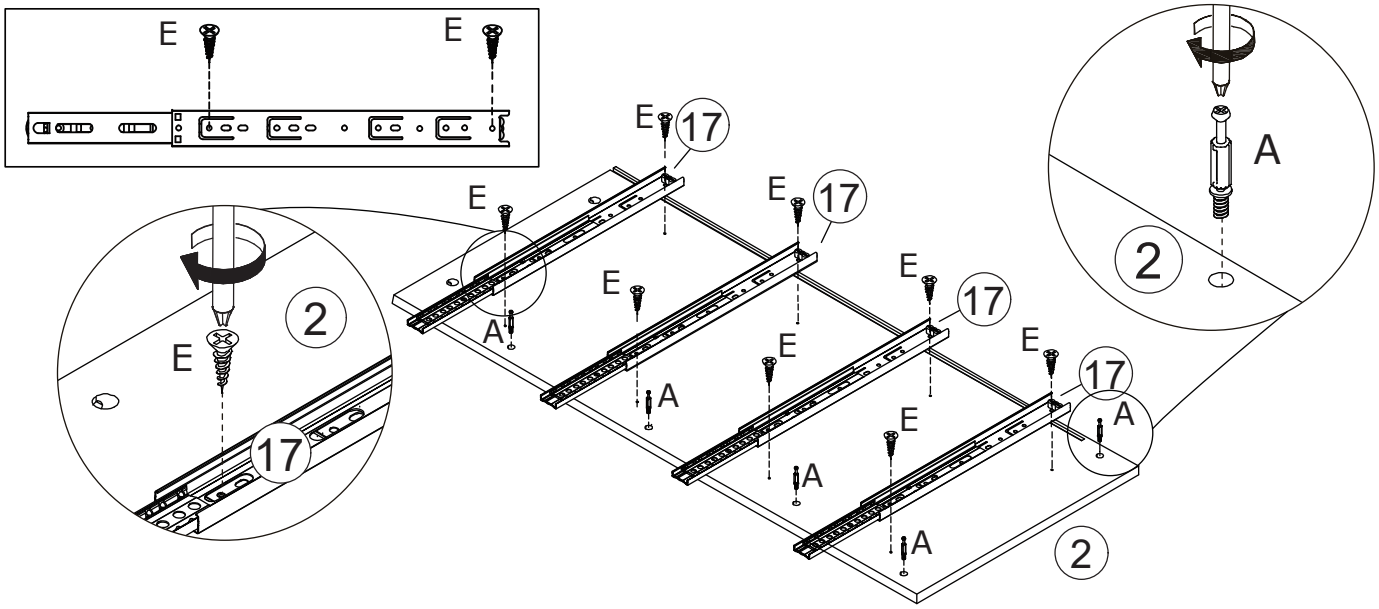

2

A x 5	E x 8
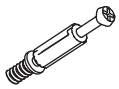	
CRA0635A	CRD3512A

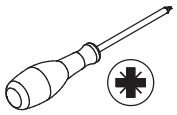

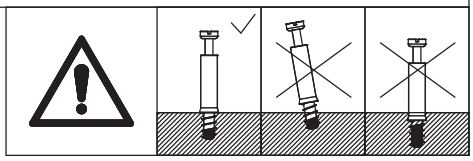

Insert quickfit screw(A) to part 3.Fix slide rail 17 to part 3 using screw(E) as shown.
Please pay attention to the holes where the accessories are inserted and don't use an electricscrewdriver.

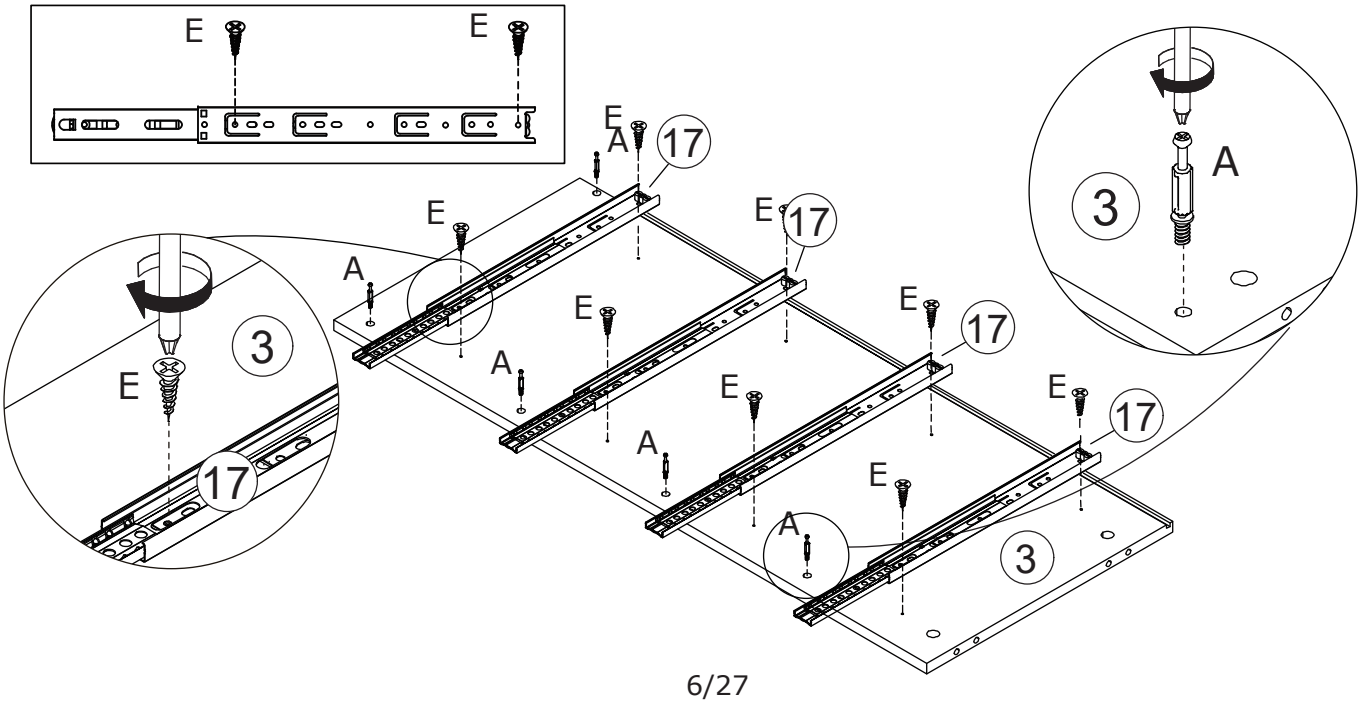

3

E x 8

CRD3512A

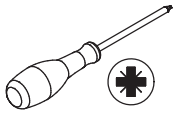

Fix slide rail 17 to the left of part 4 using screw(E) as shown.

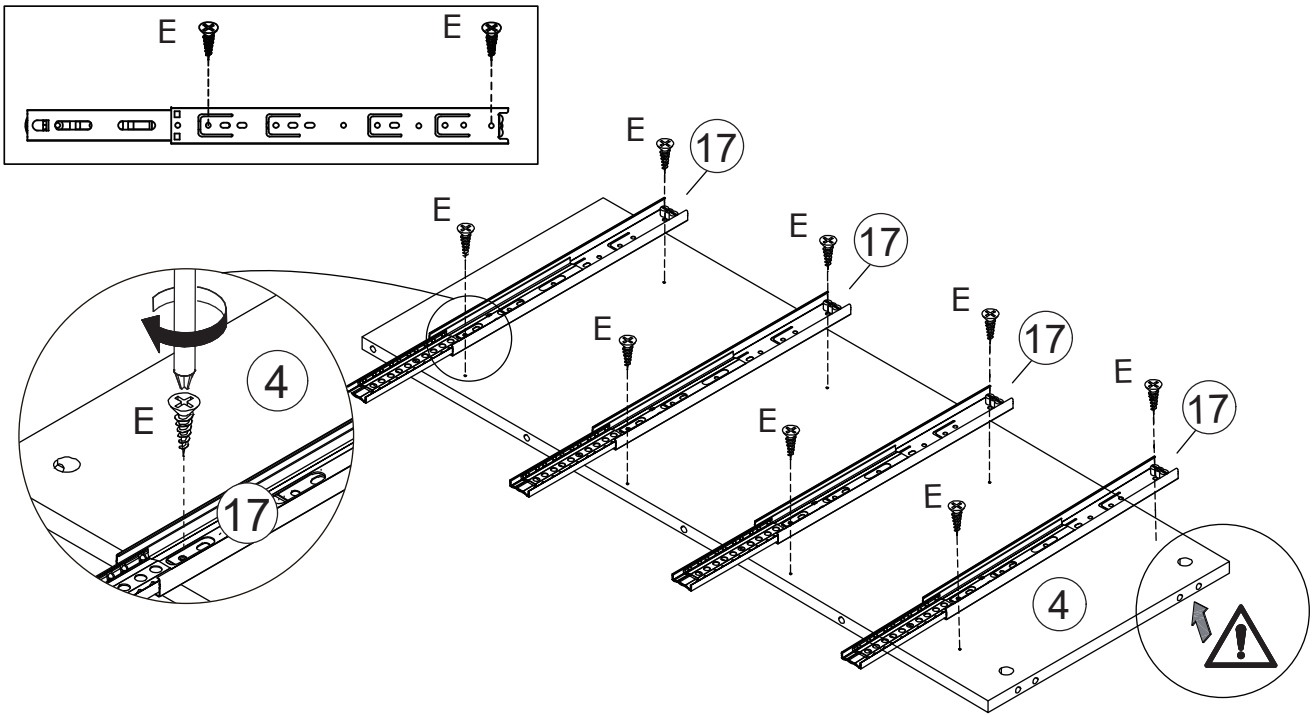

4

E x 8

CRD3512A

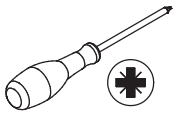

Fix slide rail 17 to the right of part 4 using screw(E) as shown.

Please note, the pre-drilling of the rail on the front and back of this board is asymmetrical. Please install the rails according to the picture.
This side as shown must be facing the middle drawer after installation is complete.

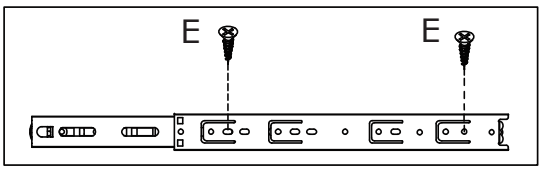

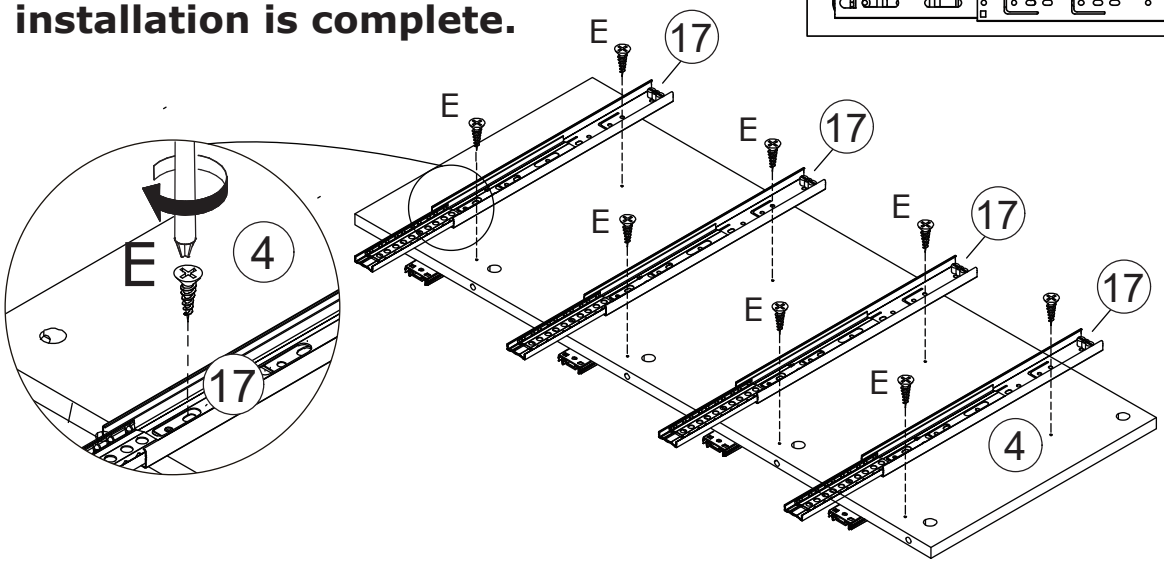

5

E x 8

CRD3512A

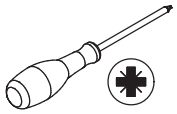

Fix slide rail 17 to the left of part 5 using screw(E) as shown.

Please note, the pre-drilling of the rail on the front and back of this board is asymmetrical. Please install the rails according to the picture.
This side as shown must be facing the middle drawer after installation is complete.

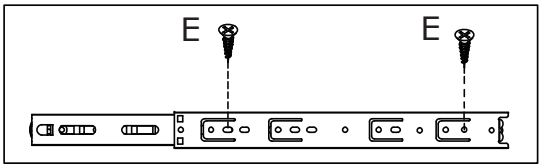

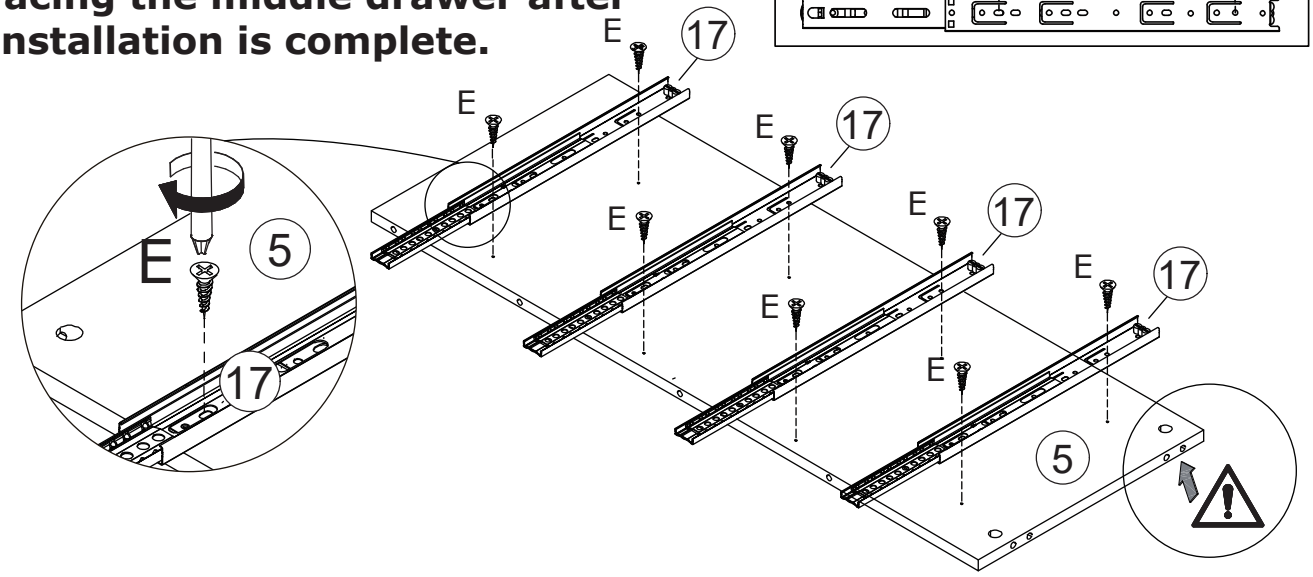

6

E x 8

CRD3512A

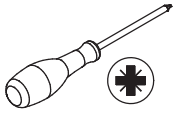

Fix slide rail 17 to the right of part 5 using screw(E) as shown.

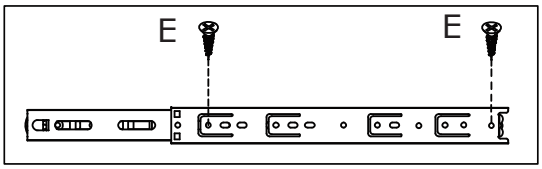

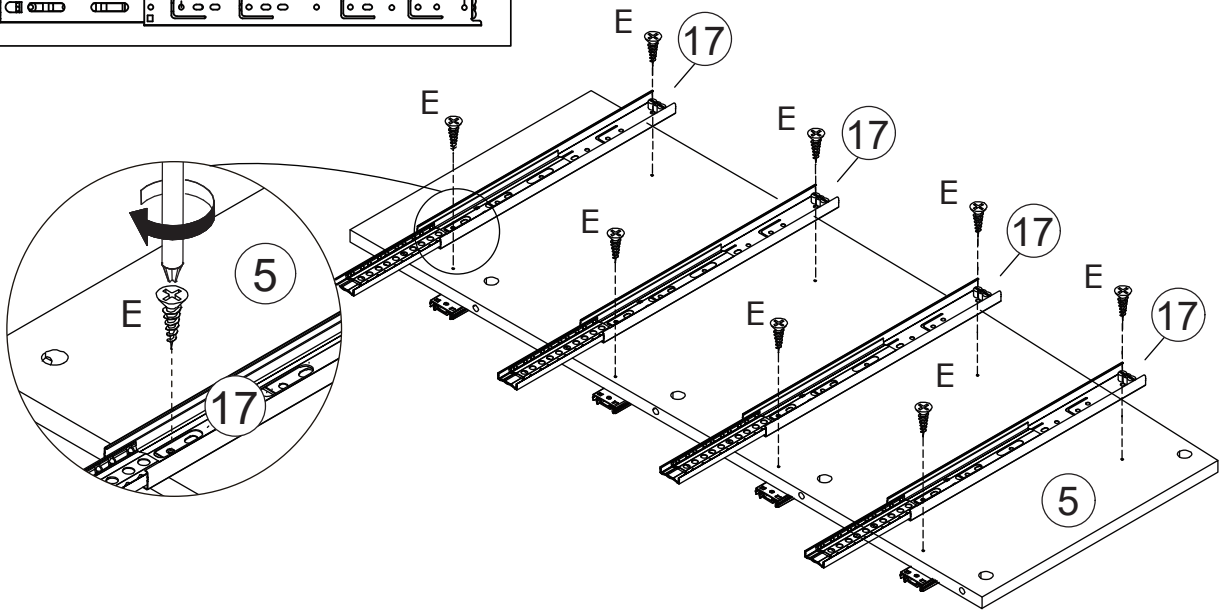

7

A x 2

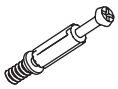

CRA0635A

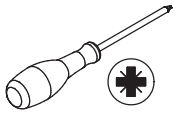

Insert quickfit screw(A) to part 7 as shown.

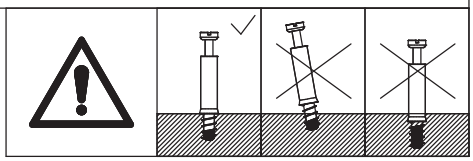

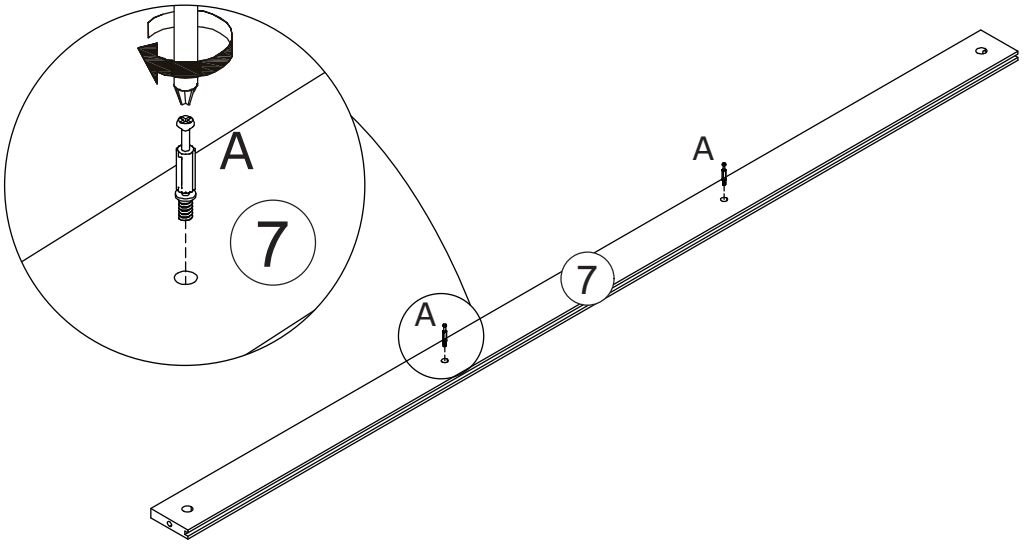

8

A x 6

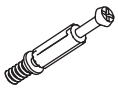

CRA0635A

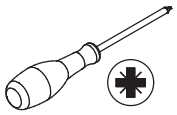

Insert quickfit screw(A) to part 6 as shown.

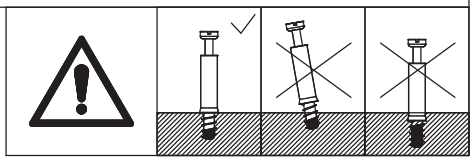

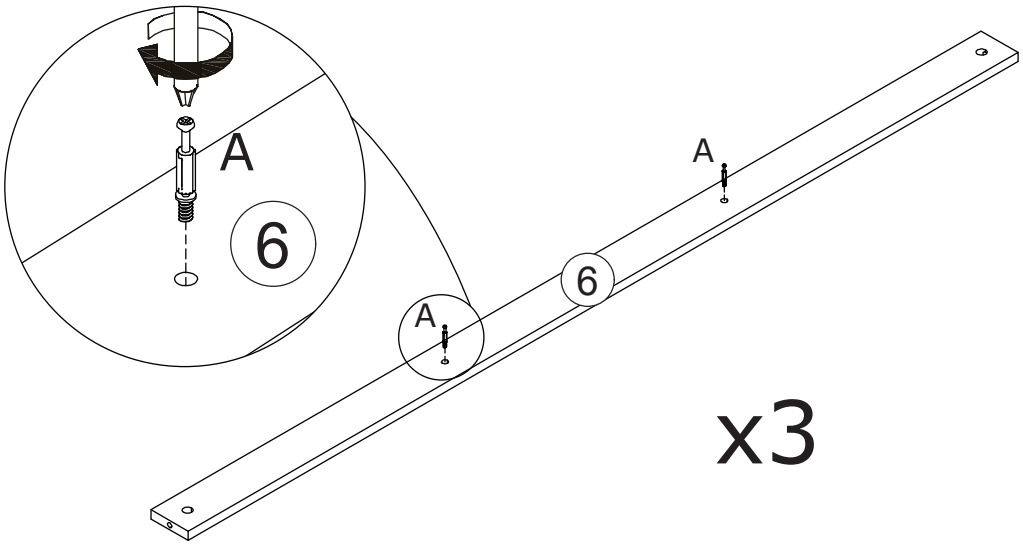

9

A x 2

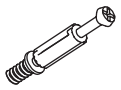

CRA0635A

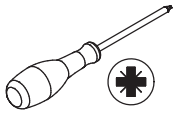

Insert quickfit screw(A) to part 18 as shown.

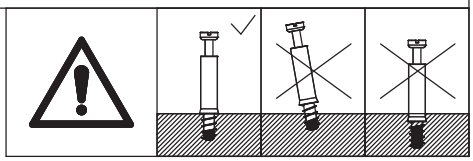

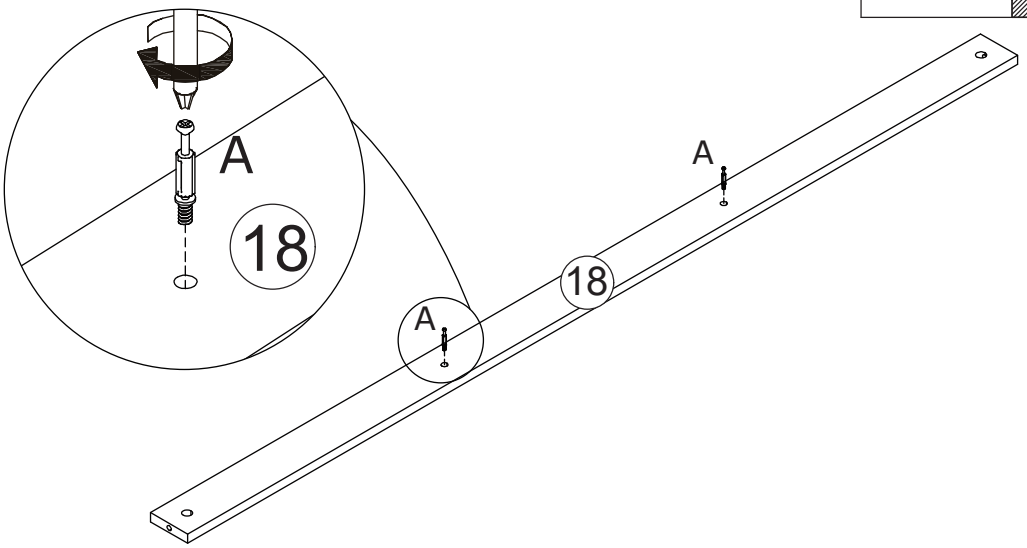

10

B x 10

CRB1595A

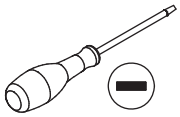

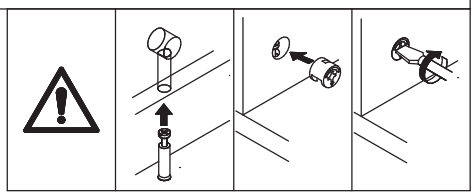

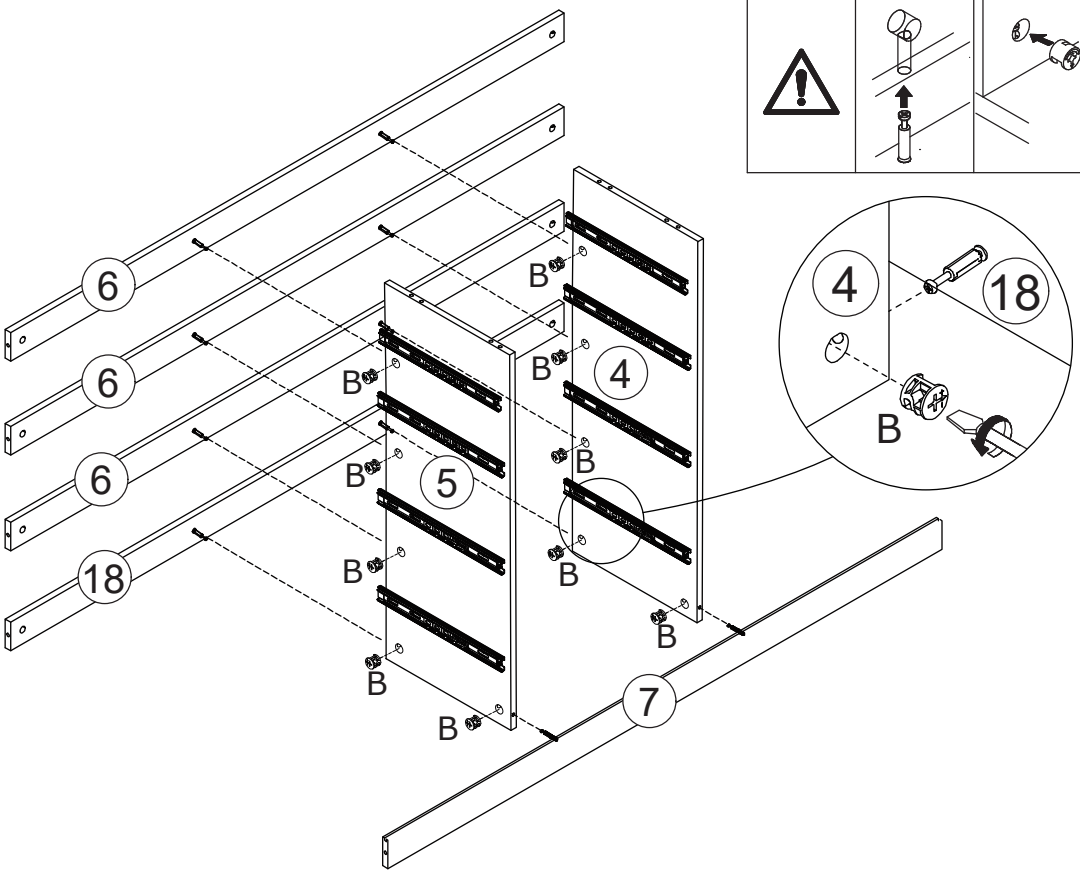

Attach part 6 and 18 to part 4 and 5, turn cam locks(B) clockwise to tighten as shown.Attach part 7 to part 4 and 5, turn cam locks(B) clockwise to tighten as shown.

11

B x 10

CRB1595A

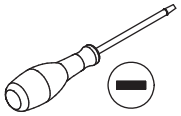

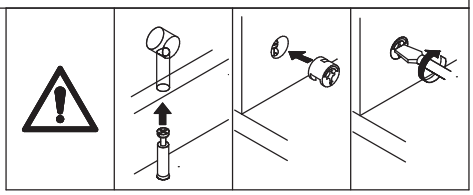

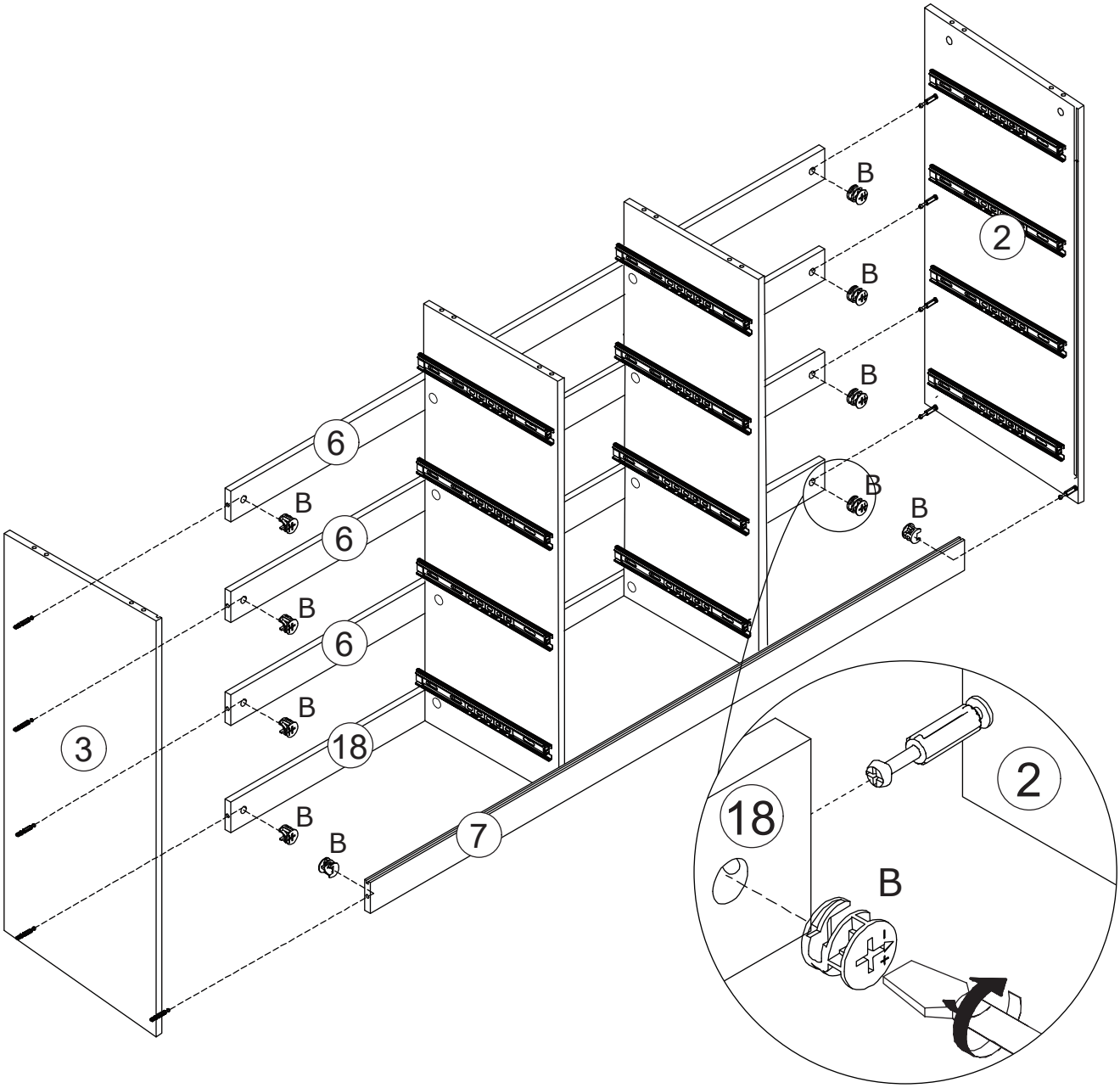

Attach part 2,3 to part 6,18 and 7, turn cam locks(B) clockwise to tighten as shown.

12

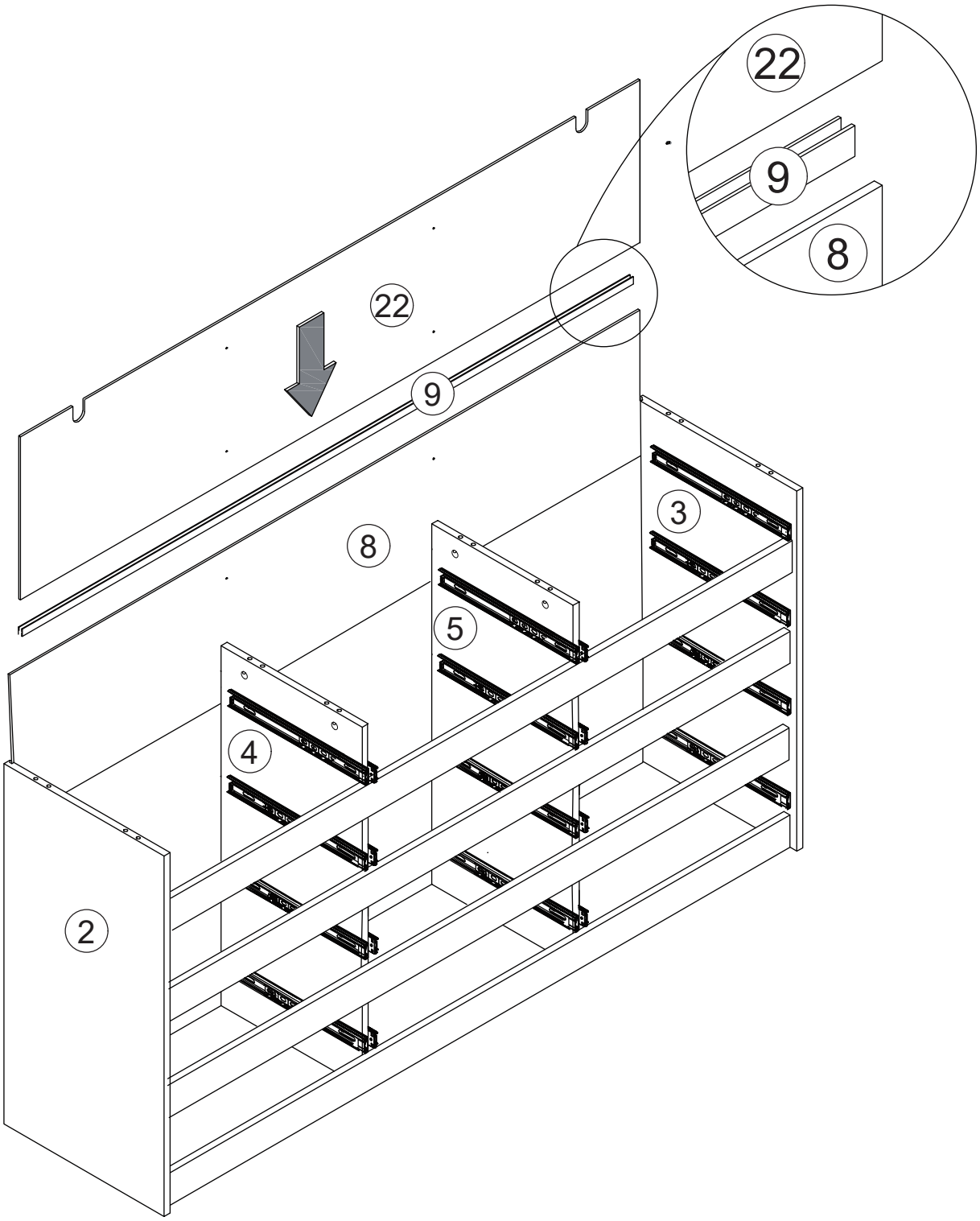

Connect part 8,22 with part 9 and insert into the available slots of part 2,3 and 7 as shown.

13

A x 8	E x 2	I x 2	
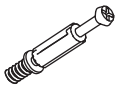 CRA0635A	CRD3512A	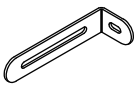	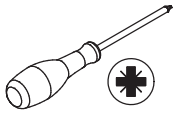

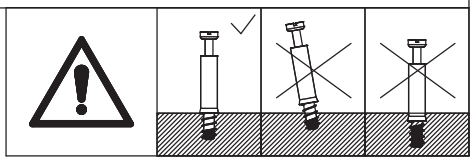

Insert quickfit screw(A) to part 1 as shown.
Fix part(I) to part 1 using screw(E) as shown.
Please pay attention to the holes where the accessories are inserted and don't use an electric screwdriver.

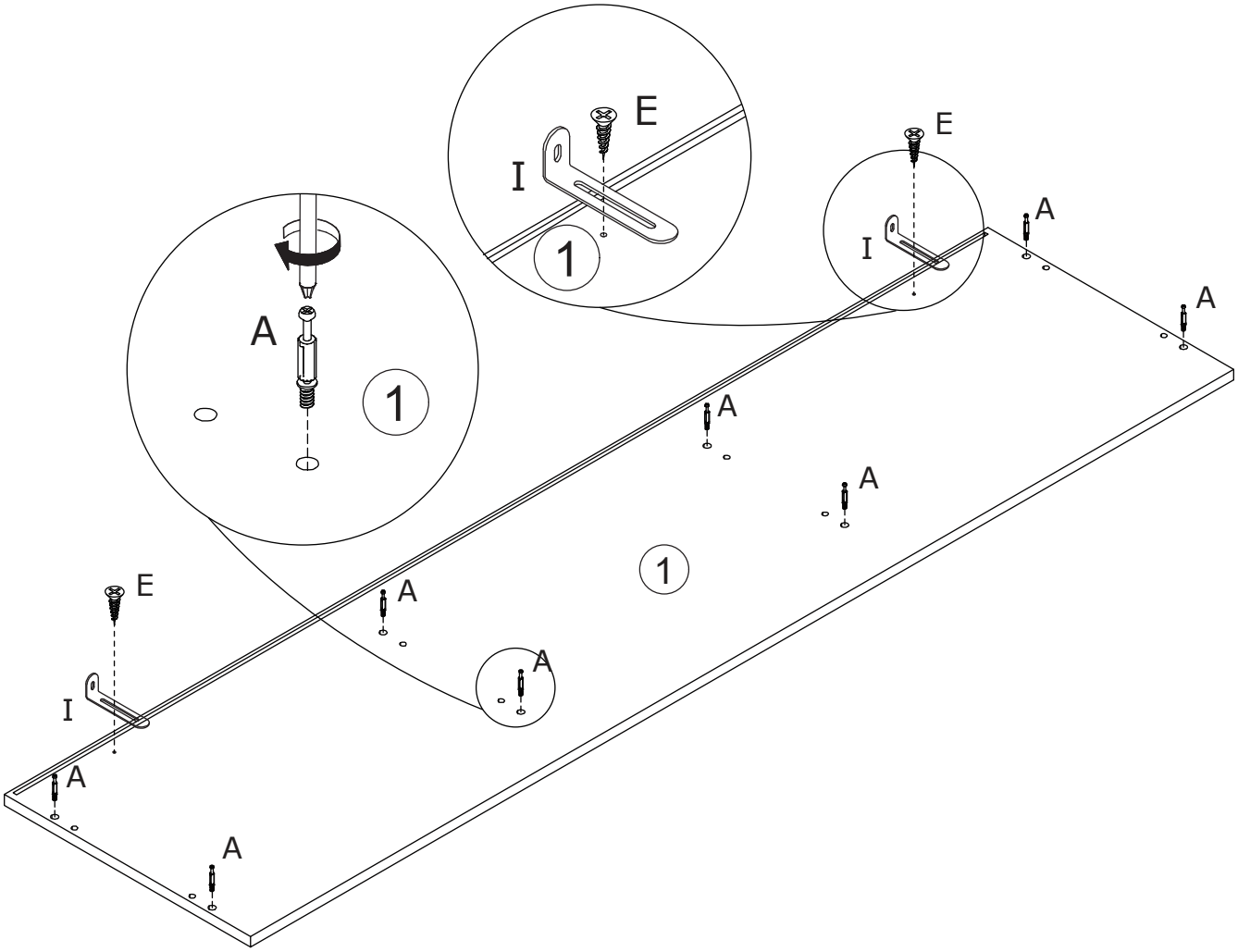

14

B x 8	C x 8	
CRB1595A	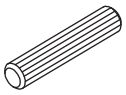 CRF0630A	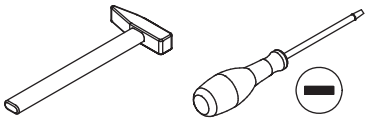

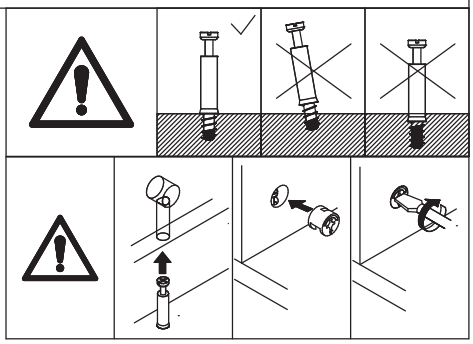

Cover part 1 to the assembled unit with wooden dowel(C),and turn cam locks(B) clockwise to tighten as shown.

15

F x 8

CRD3520A

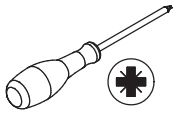

Fix back panel 22 and 8 to the assembled with screw(F) as shown.

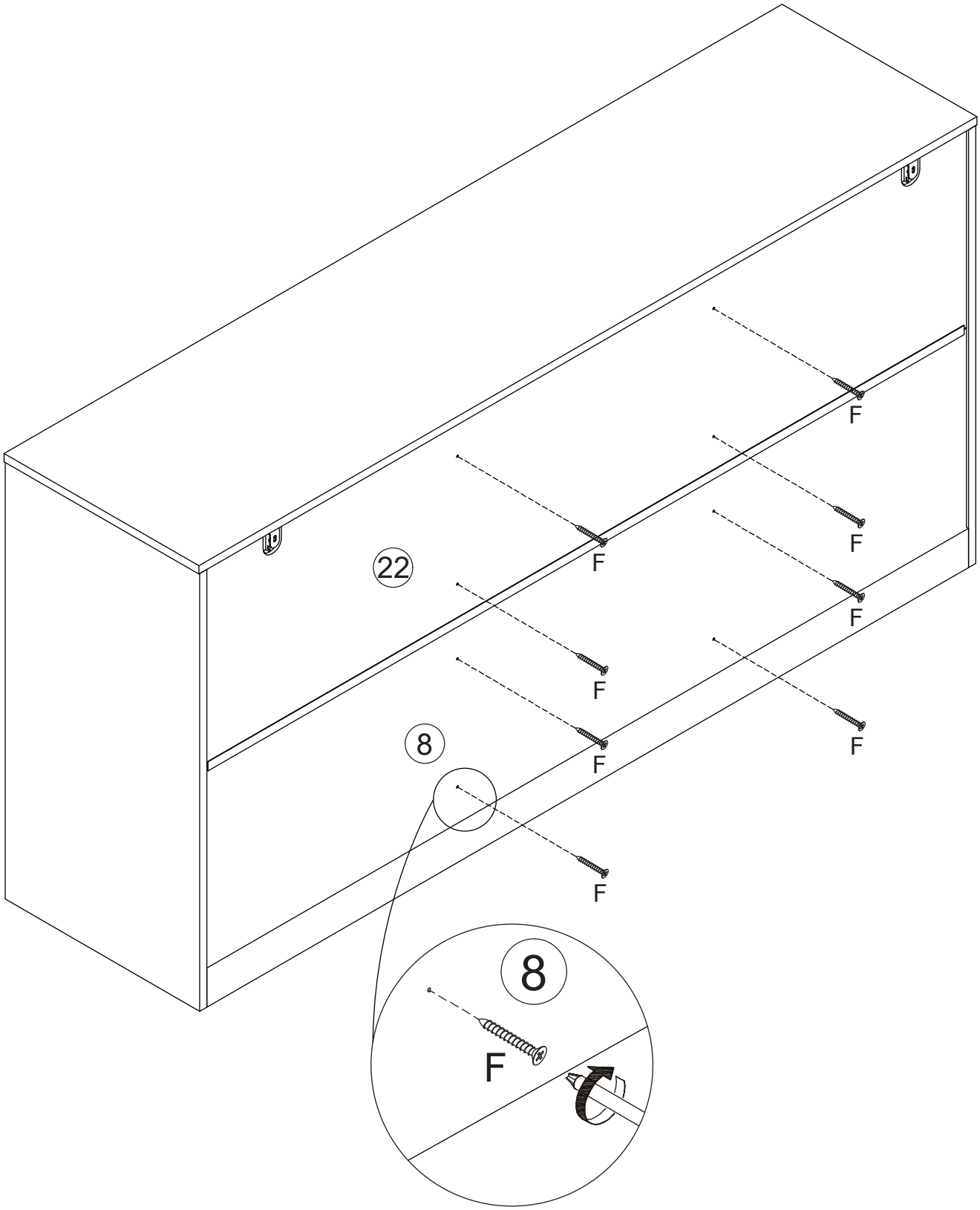

16

G x 2	H x 2	I x 2	
CRD3535A		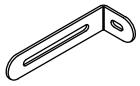	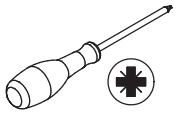

After setting the hole position on the wall, use an electric drill to drill the hole, knock part(I) into the wall, and then fix the cabinet and the wall firmly with screw(G) as shown.

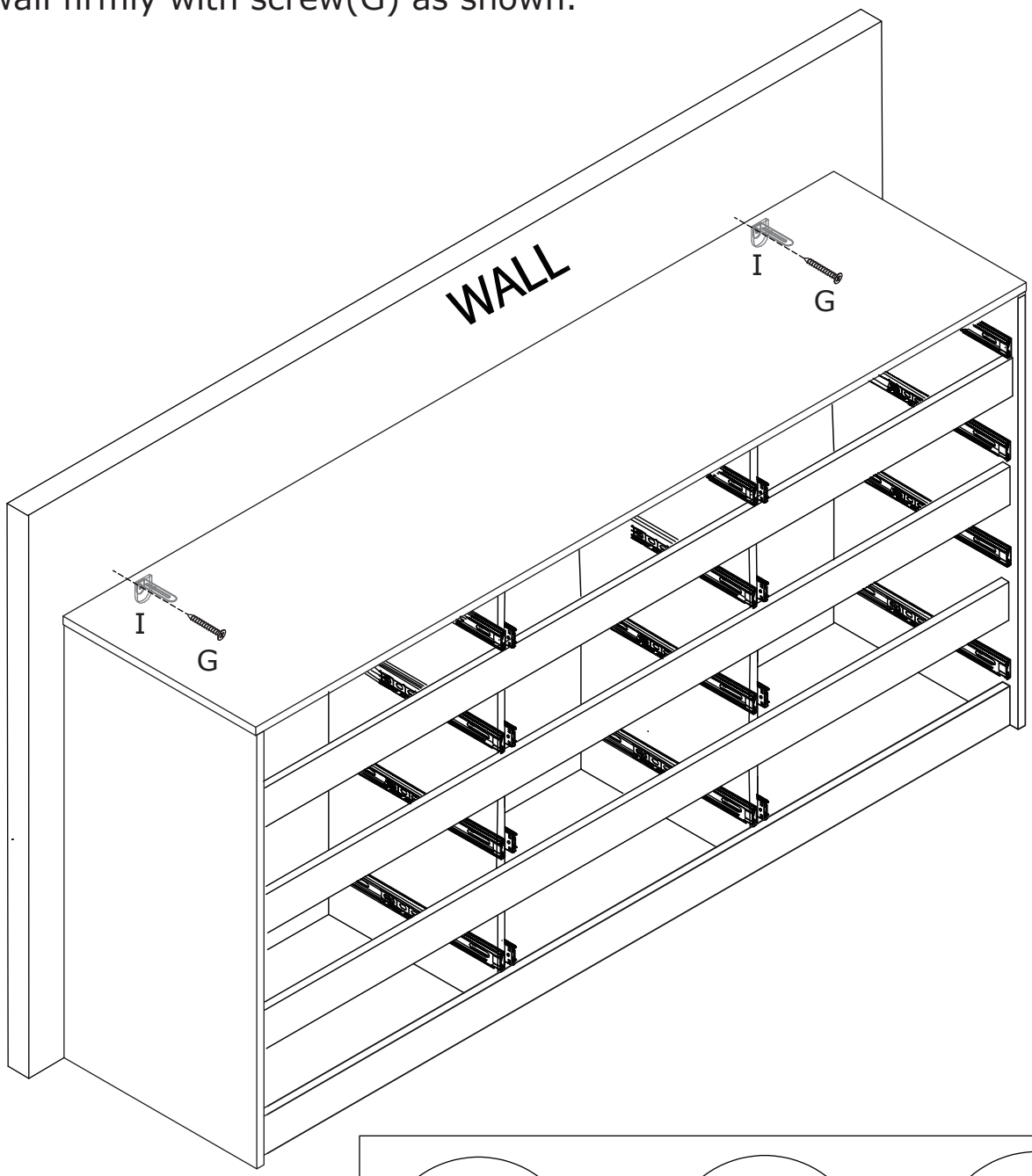

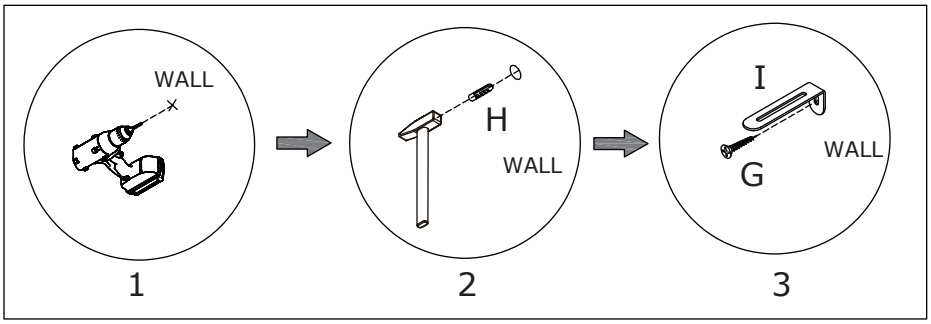

17

A x 12

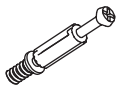

CRA0635A

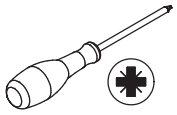

Insert quickfit screw(A) to part 10 as shown.

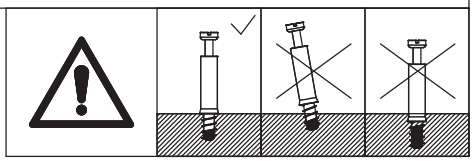

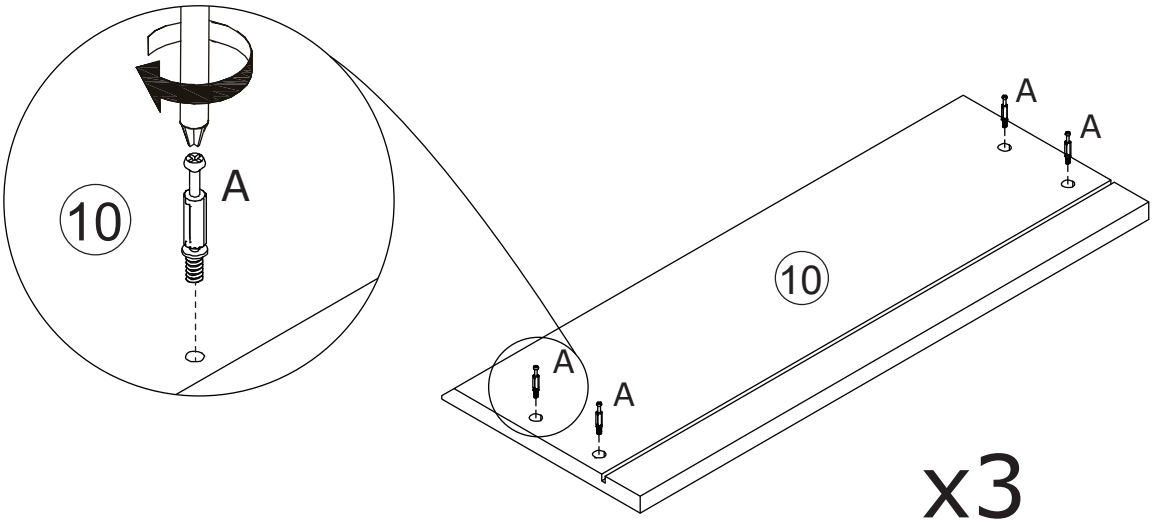

18

A x 12

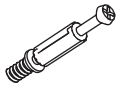

CRA0635A

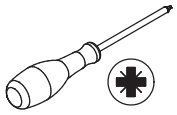

Insert quickfit screw(A) to part 11 as shown.

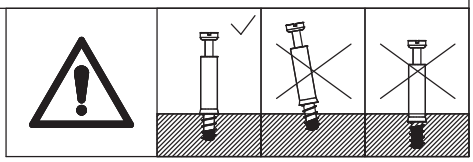

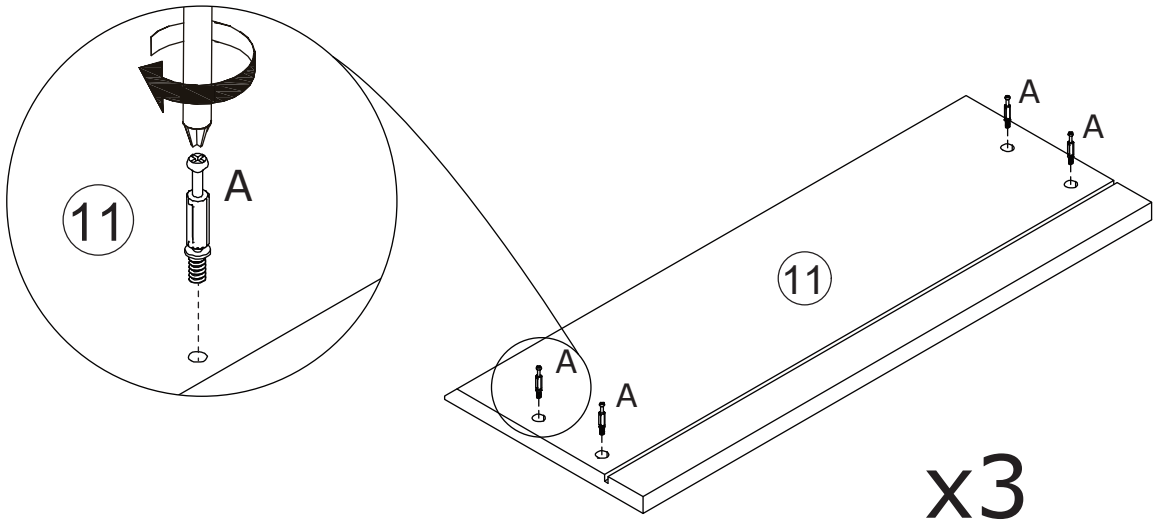

19

A x 12

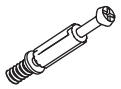

CRA0635A

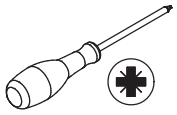

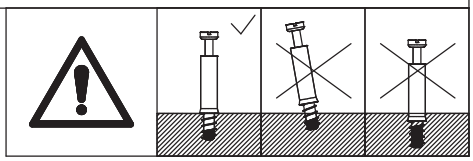

Insert quickfit screw(A) to part 12 as shown.

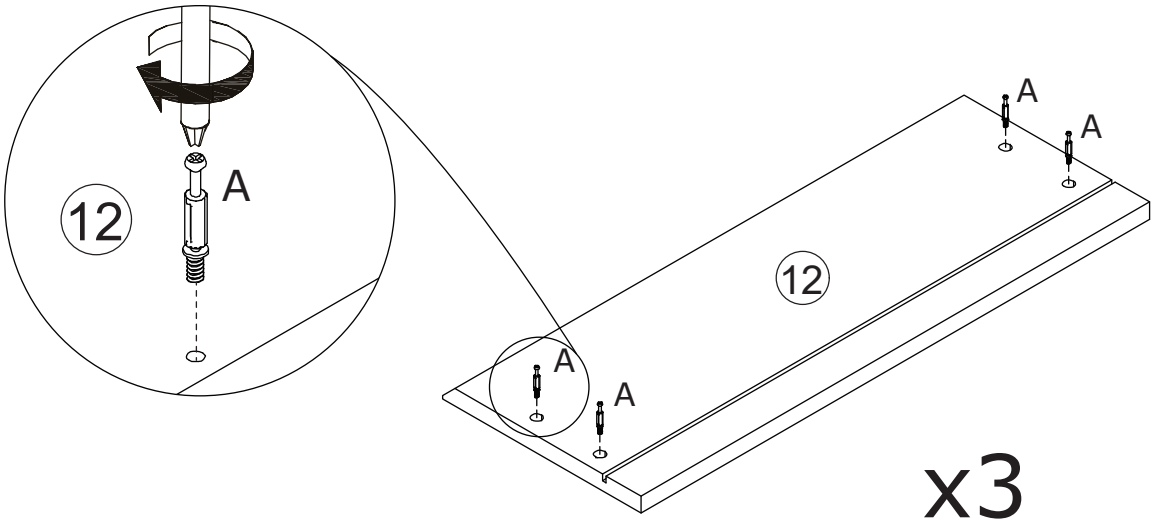

20

A x 4

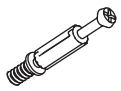

CRA0635A

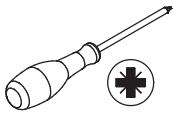

Insert quickfit screw(A) to part 19 as shown.

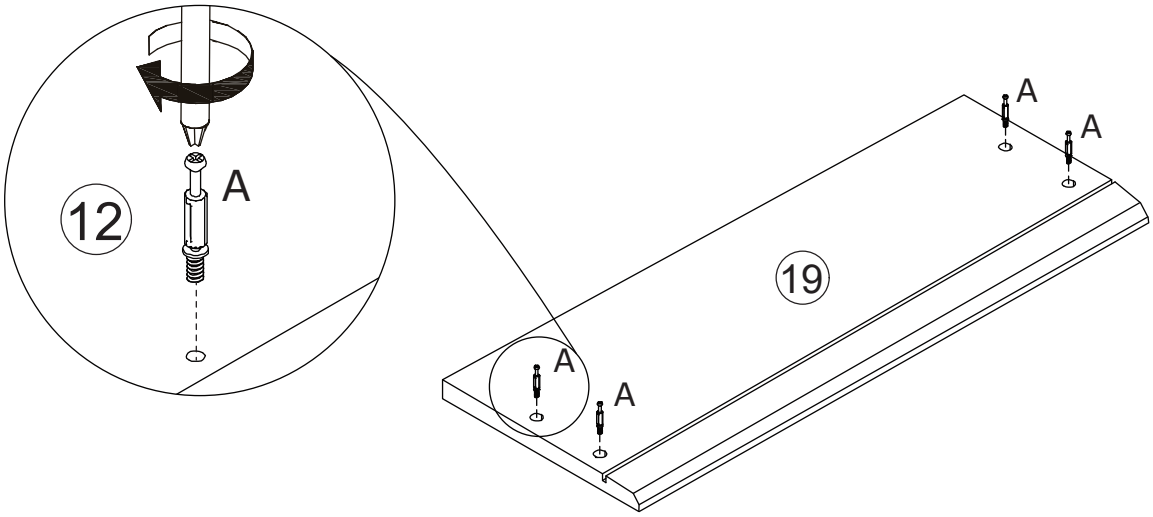

21

A x 4

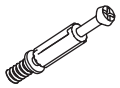

CRA0635A

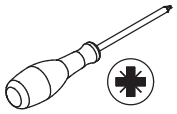

Insert quickfit screw(A) to part 20 as shown.

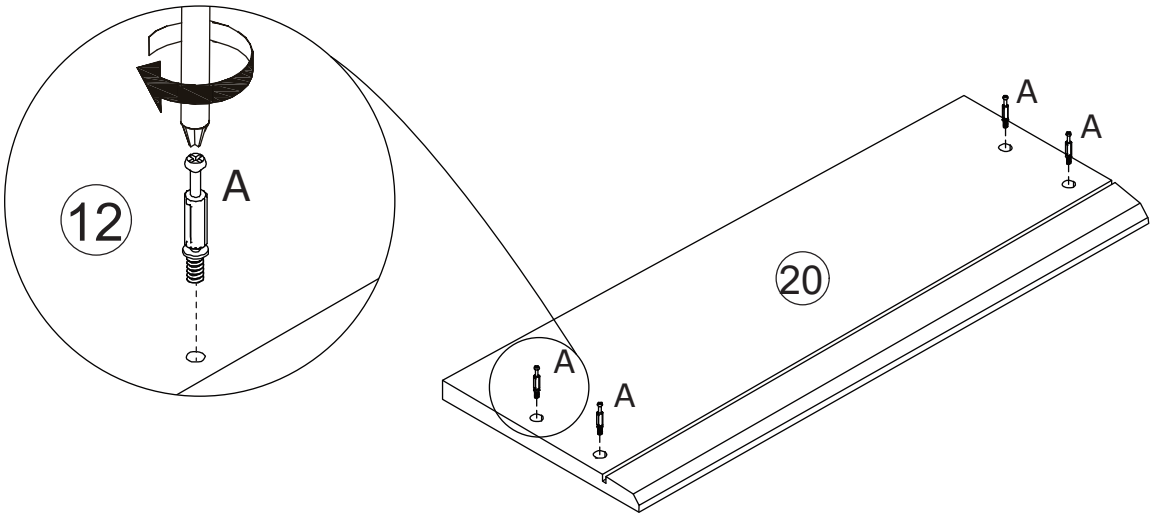

22

A x 4

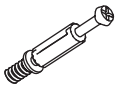

CRA0635A

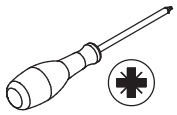

Insert quickfit screw(A) to part 21 as shown.

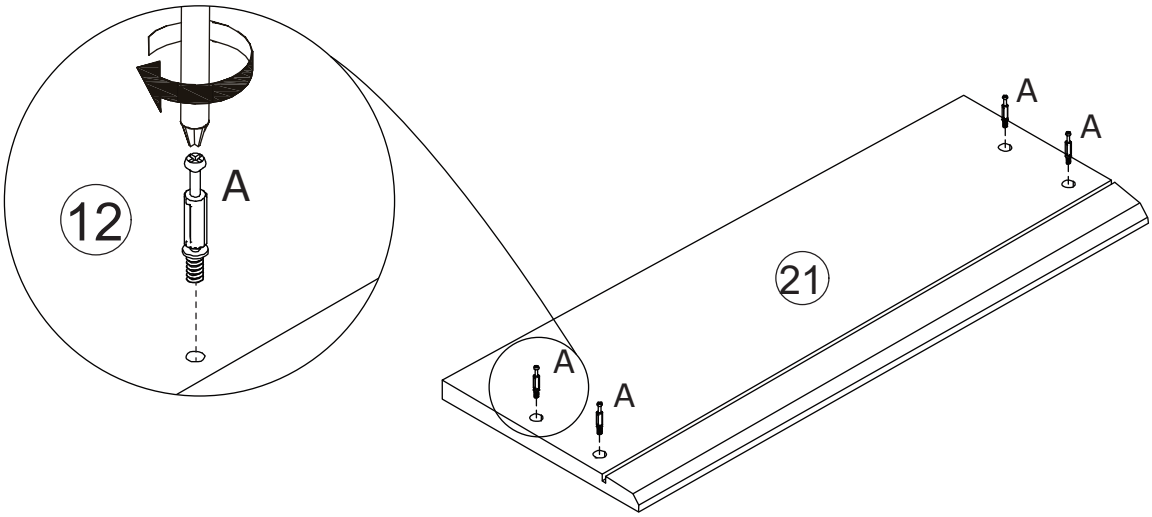

23

D x 48

CRC0540A

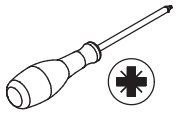

Connect part 13 and 14 to part 15 using screw(D) as shown.

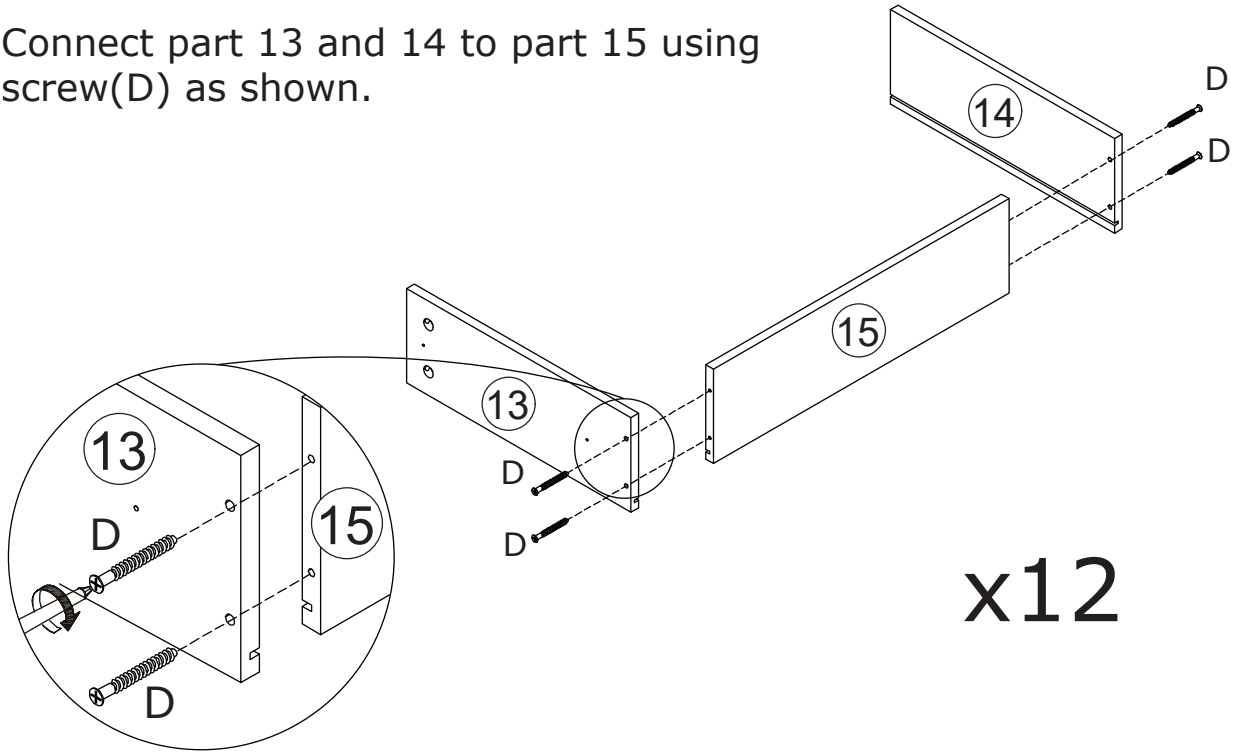

x12

24

Insert part 16 into the available slots as shown.

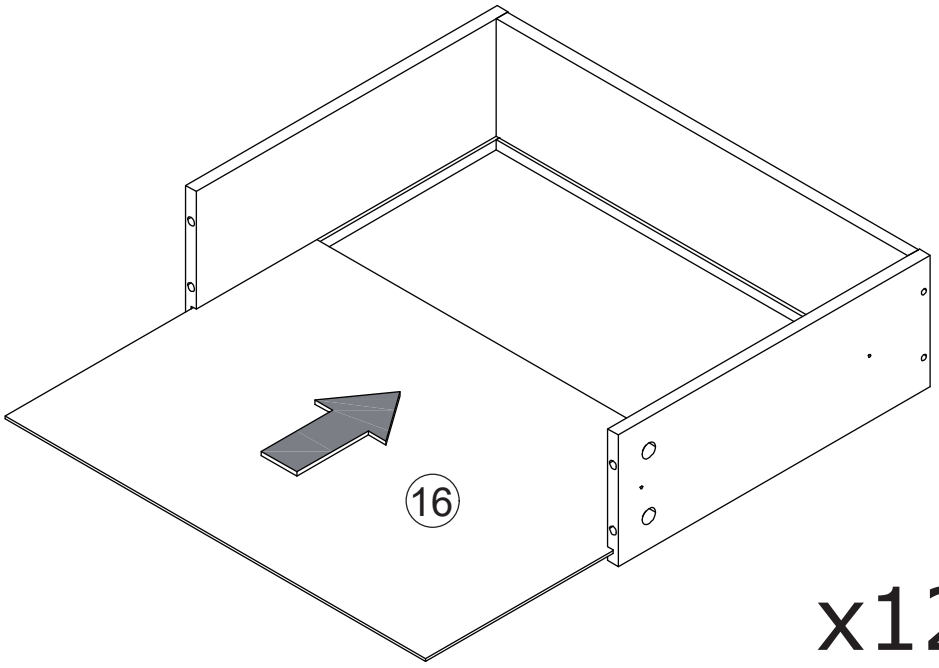

x12

25

B x 12

CRB1595A

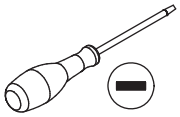

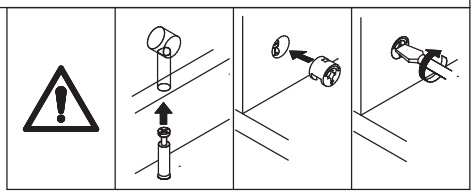

Attach part 10 to part 13 and 14, turn cam locks(B)clockwise to tighten as shown.

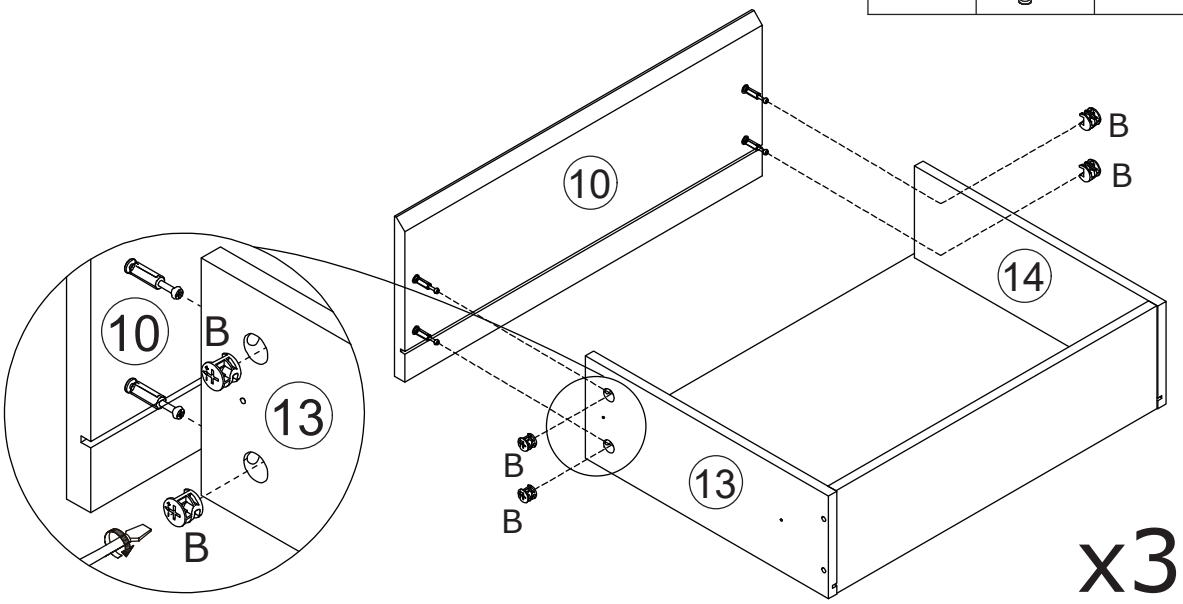

26

B x 12

CRB1595A

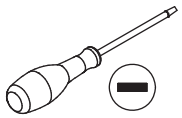

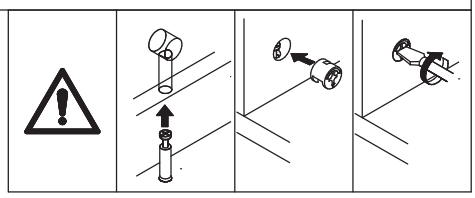

Attach part 11 to part 13 and 14, turn cam locks(B)clockwise to tighten as shown.

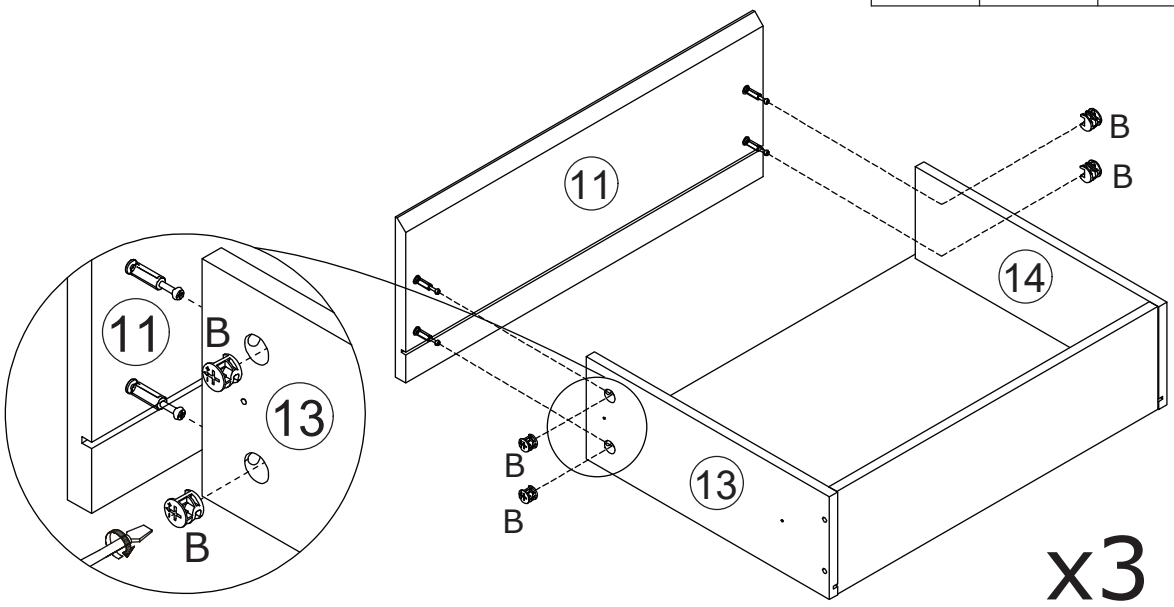

27

B x 12

CRB1595A

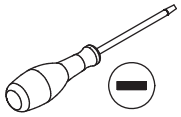

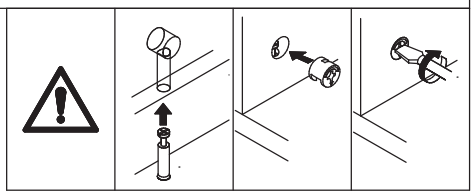

Attach part 12 to part 13 and 14, turn cam locks(B)clockwise to tighten as shown.

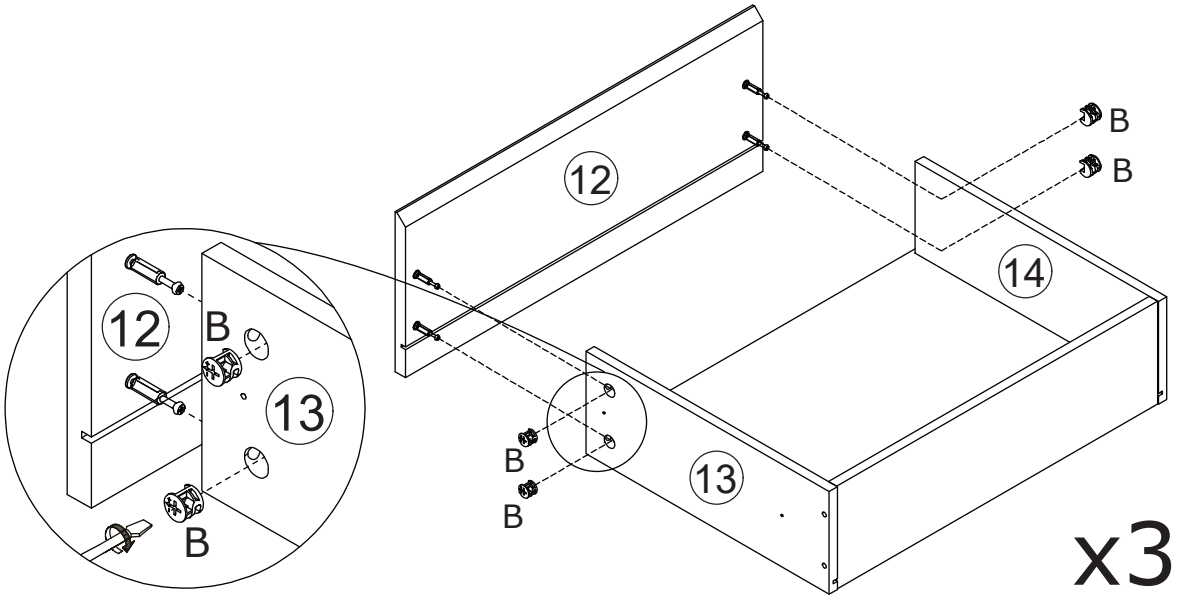

28

B x 4

CRB1595A

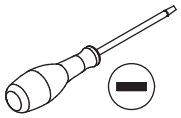

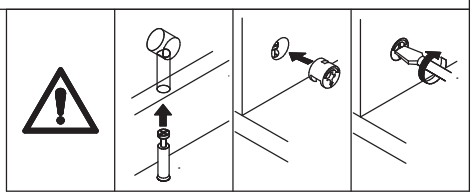

Attach part 19 to part 13 and 14, turn cam locks(B)clockwise to tighten as shown.

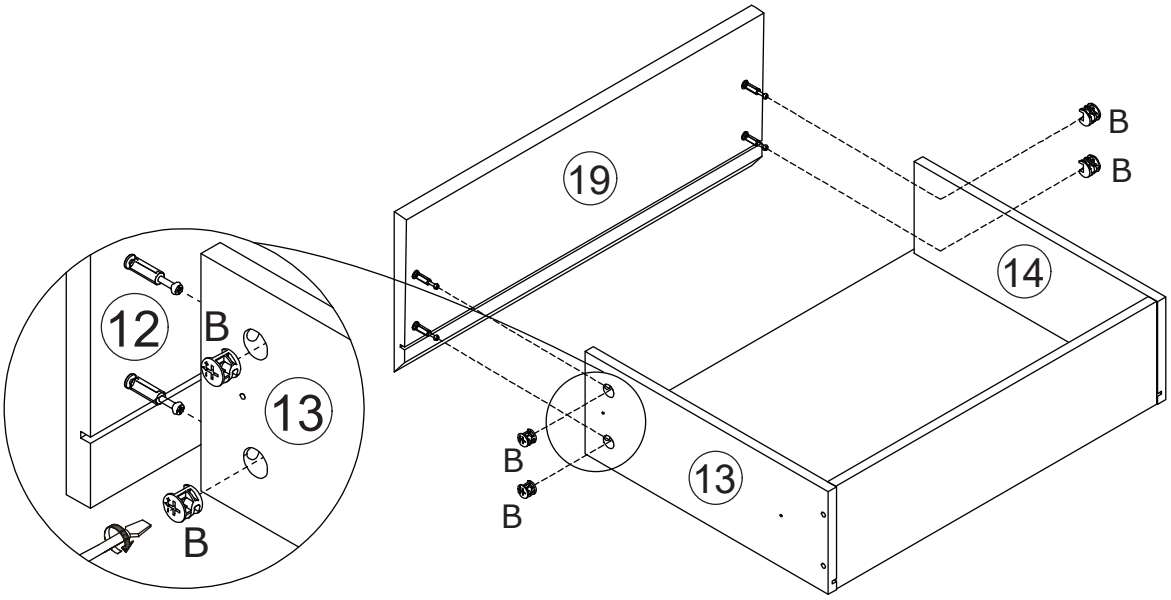

29

B x 4

CRB1595A

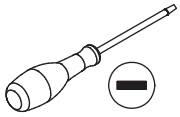

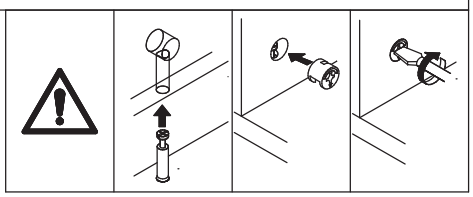

Attach part 20 to part 13 and 14, turn cam locks(B)clockwise to tighten as shown.

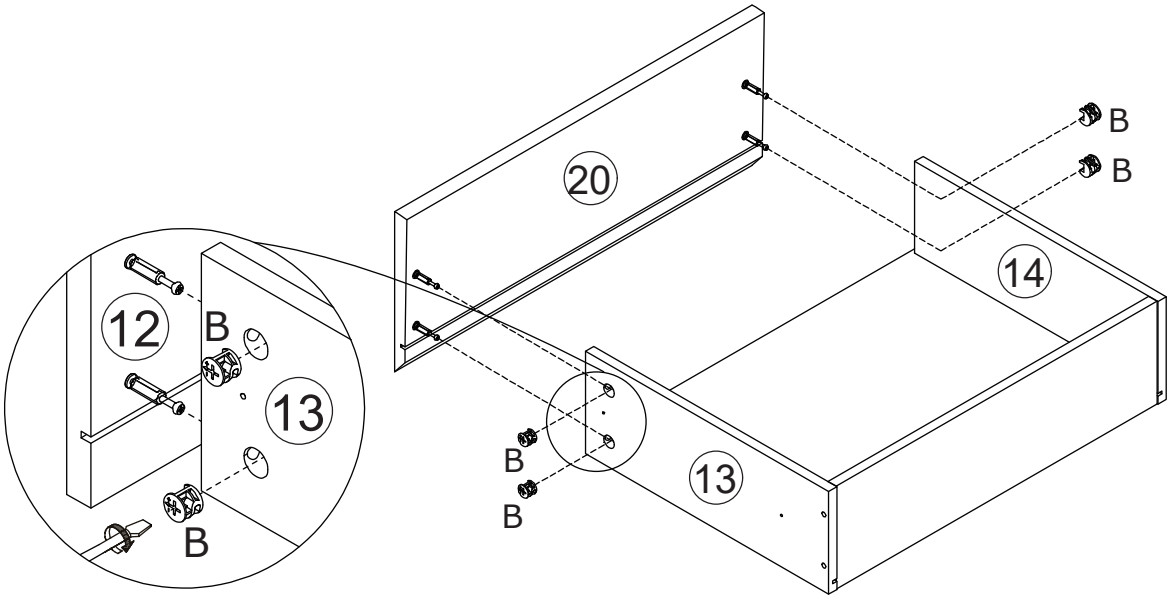

30

B x 4

CRB1595A

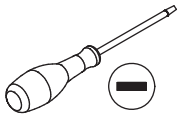

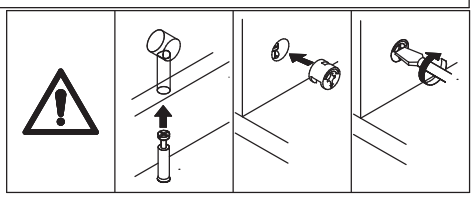

Attach part 21 to part 13 and 14, turn cam locks(B)clockwise to tighten as shown.

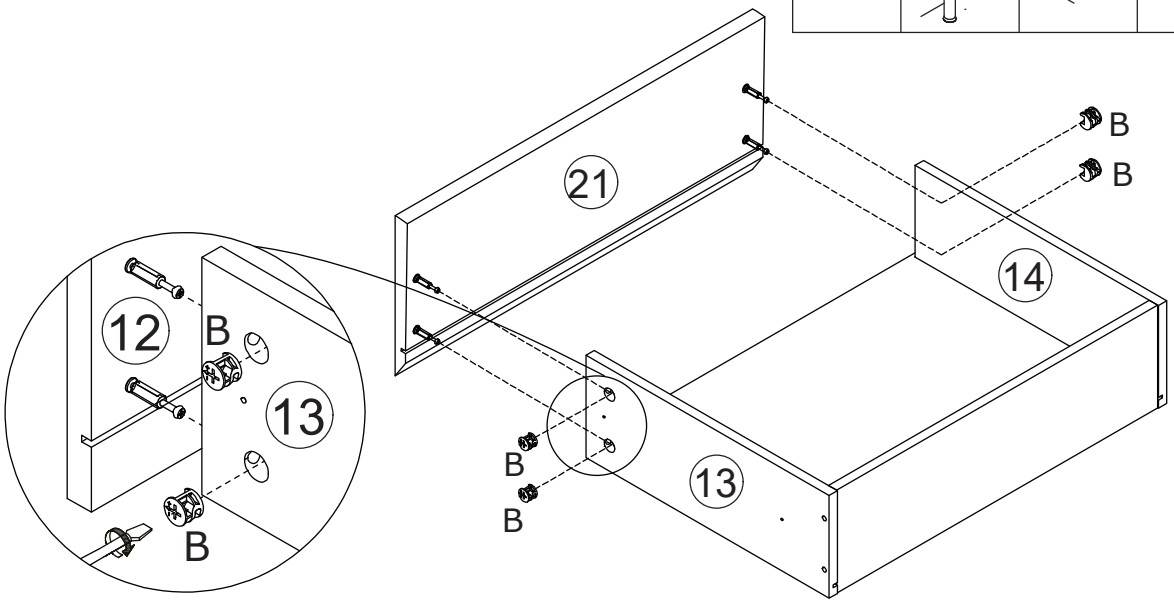

31

E x 12

CRD3512A

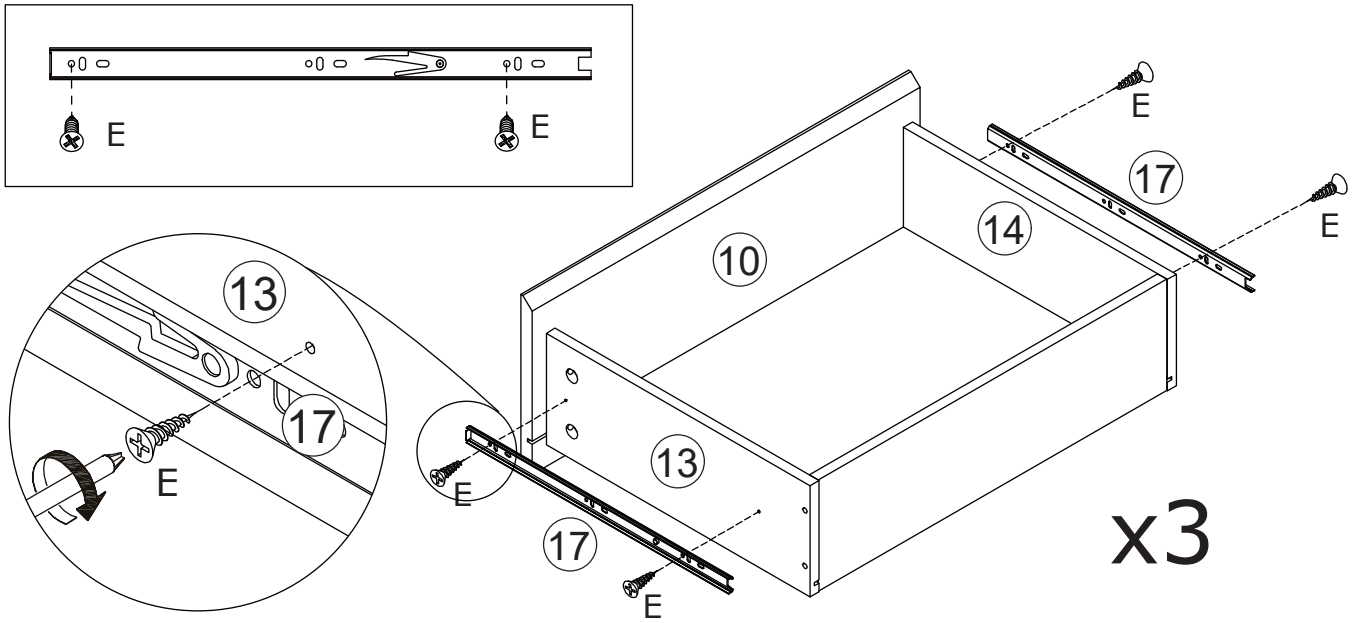

Fix slide rail 17 to part 13 and 14 using screw(E) as shown.

32

E x 12

CRD3512A

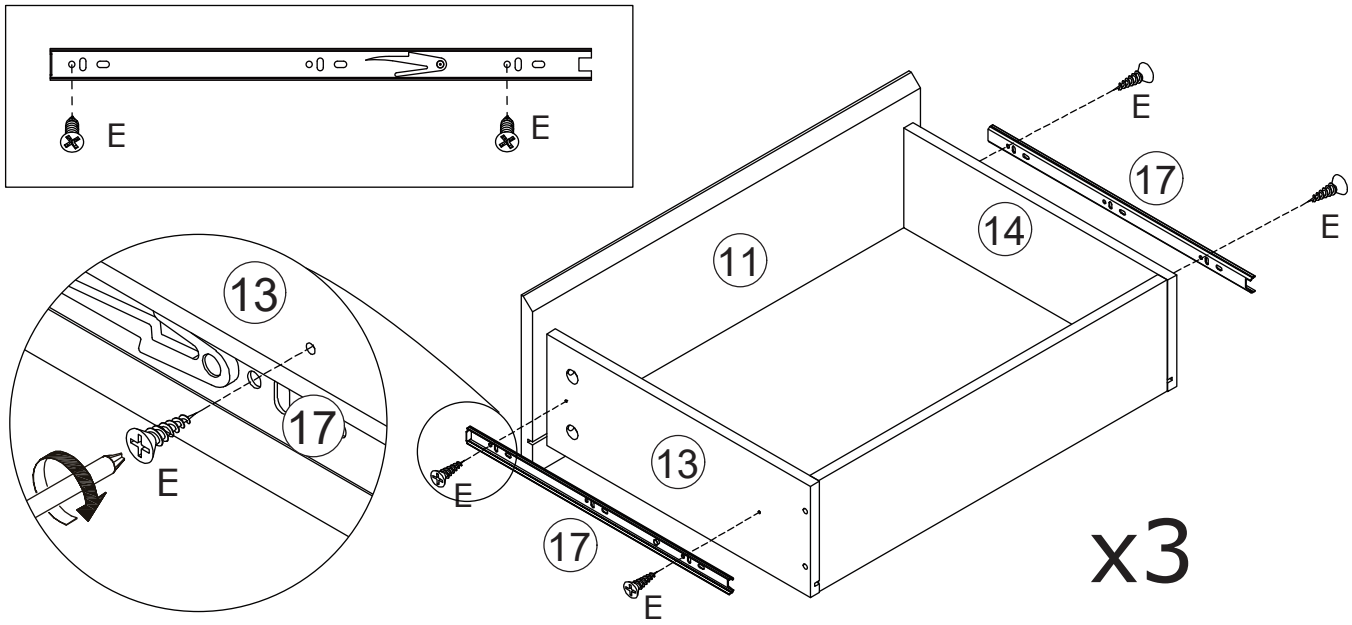

Fix slide rail 17 to part 13 and 14 using screw(E) as shown.

33

E x 12

CRD3512A

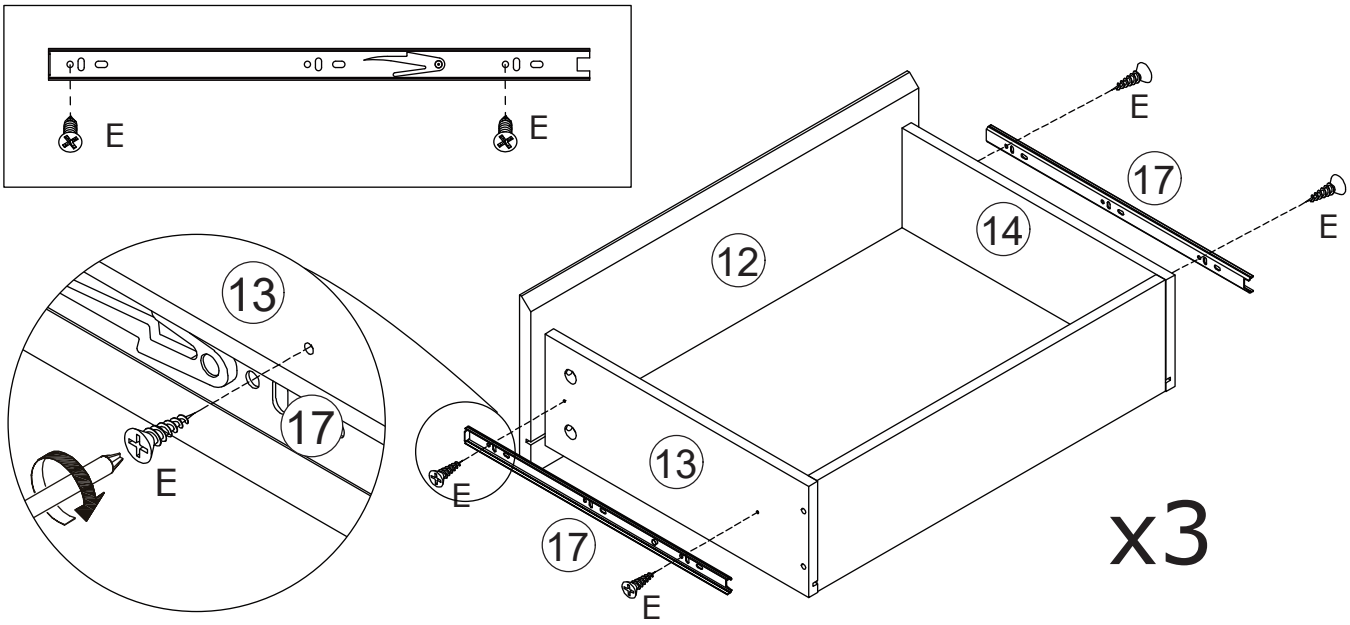

Fix slide rail 17 to part 13 and 14 using screw(E) as shown.

34

E x 4

CRD3512A

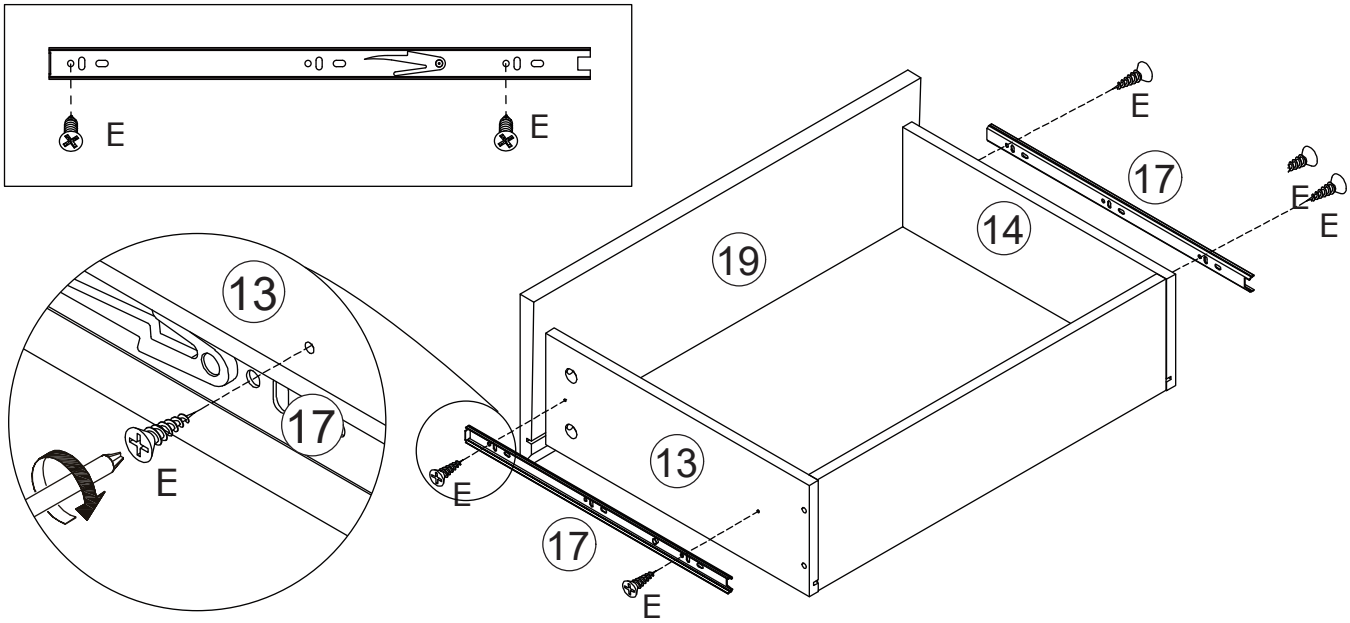

Fix slide rail 17 to part 13 and 14 using screw(E) as shown.

35

E x 4

CRD3512A

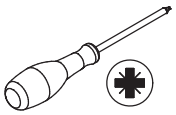

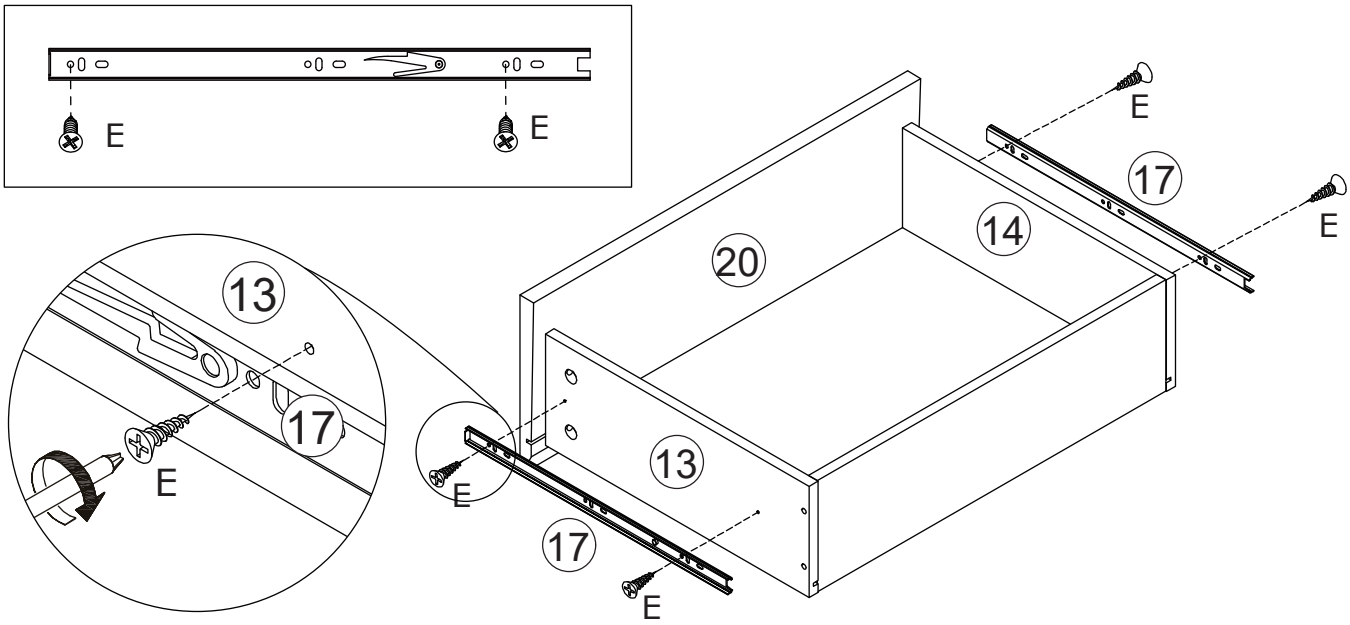

Fix slide rail 17 to part 13 and 14 using screw(E) as shown.

36

E x 4

CRD3512A

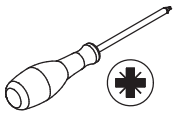

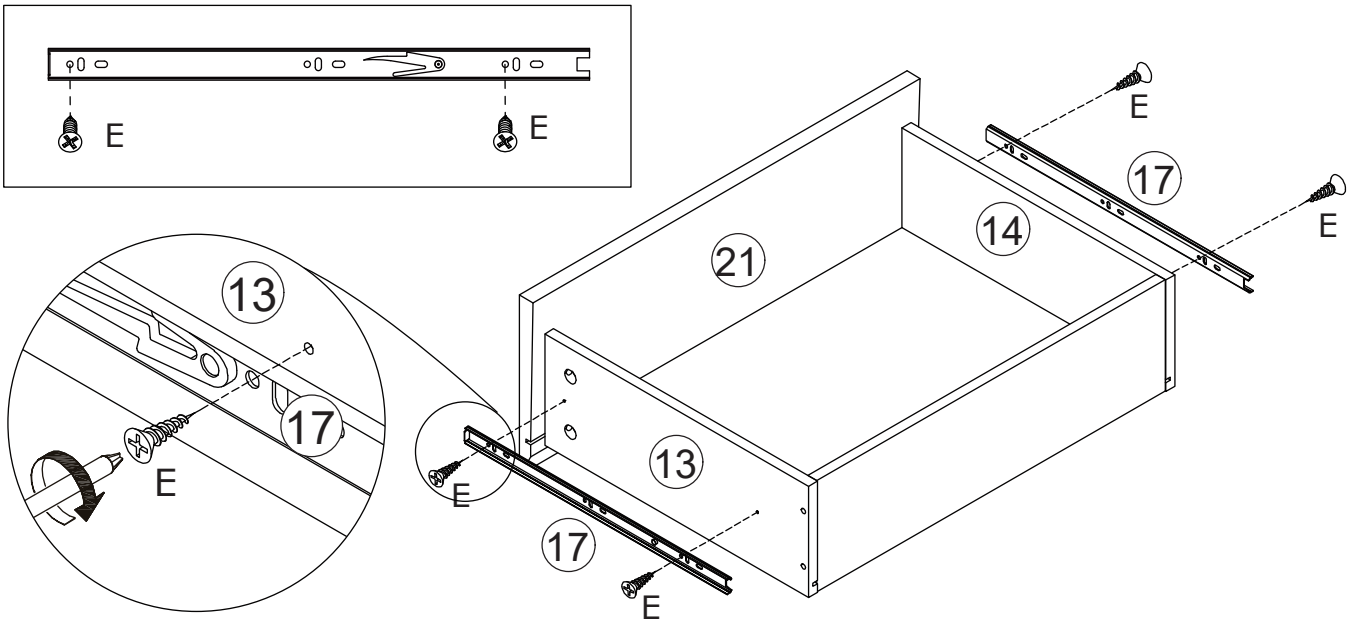

Fix slide rail 17 to part 13 and 14 using screw(E) as shown.

37

Align the rails, put all drawers as shown.
Please note: part 10,19 drawers are put in left,
part 11,20 in middle, part 12,21 in right.

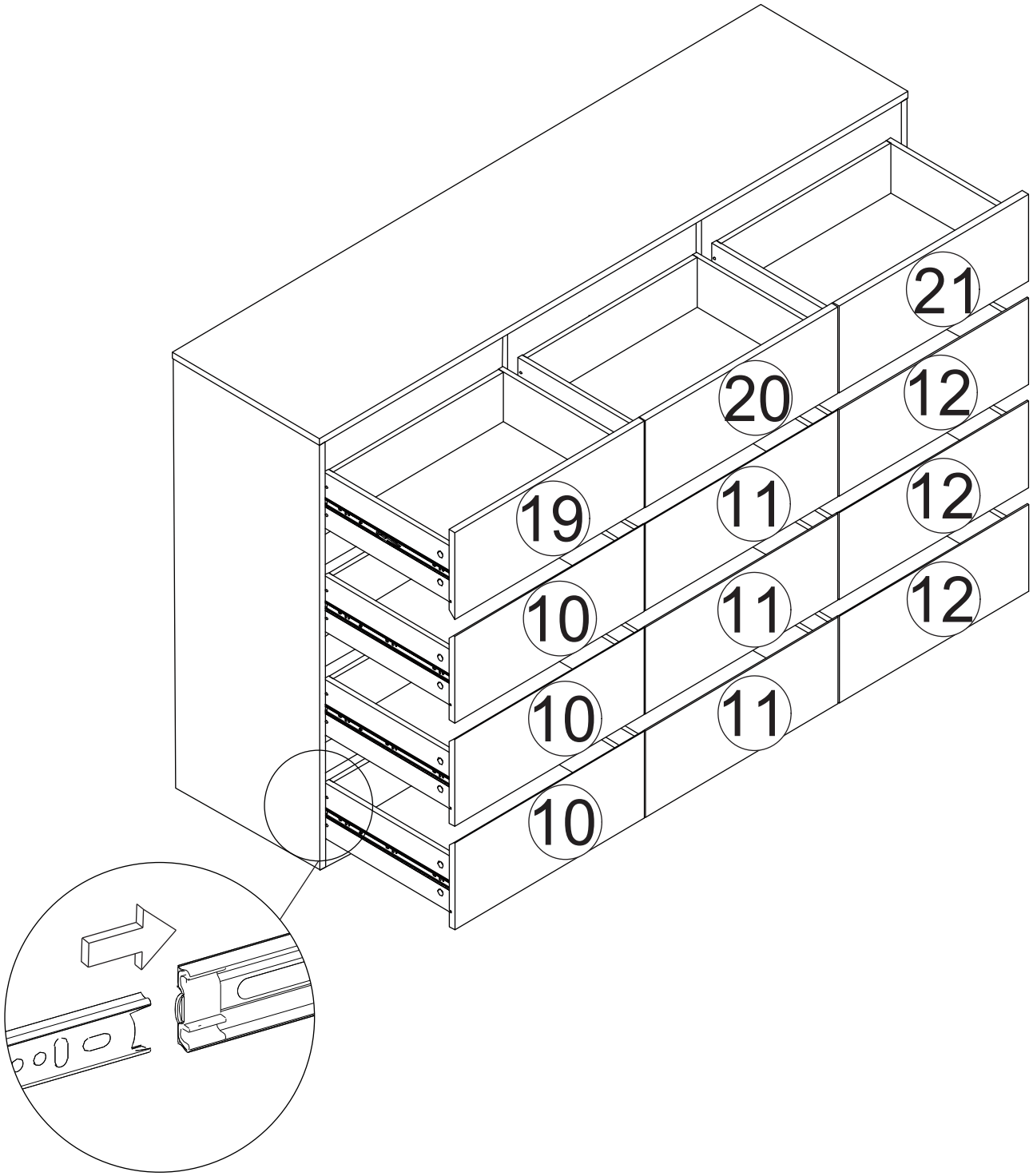

WARRANTY

WARRANTY CLAIMS

•There is a 30-day warranty for broken furniture or any other problems that do not work properly. The warranty will start from the date of purchase which must be verified by proof of purchase.

•Before making a claim, we may be able to answer your query, simply call us. Please leave your purchase order number, along with some details of the problem, if you want a replacement part. We will arrange within 48 hours. If there is out of stock, we will reply with a shipping date.

•The product must be used in accordance with the instructions provided. For health reasons.

•For other reasons, if the furniture needs to be returned, it must be cleaned and dried and operated within 30 days of receipt.

Type of Warranty Claim

•Failure to follow the furniture instructions will invalidate the warranty. Attention please.

•Does not include damage during installation, but includes damage during transportation.

Scope of responsibility

•Shall not bear any responsibility for misuse or user damage and / or loss of parts during the installation of furniture.

•After using, the damage and scratches of the furniture are not covered by the warranty.

The Warranty Relates to All Bought in The Us and Covers The Following Areas

•Sheet parts: 1 month from the date of purchase.

•Electrical parts: 1 month from the date of purchase.

RETURNS

CHANGED YOUR MIND AND NEED TO RETURN YOU ITEM?

PLEASE FOLLOW THE BELOW INSTRUCTIONS:

- If you have purchased and have simply changed your mind, follow the retailer's instructions for returns.

DEFECTIVE ITEMS

- If your item is defective in any way, i.e. it doesn't work but you can't identify why, in the first instance, please call us.

DAMAGED ITEMS

- If you receive an order with obvious shipping damage from the retailer, then we suggest the delivery is refused. If the delivery has been accepted and then shipping damage is found, please follow the specific instructions advised by the retailer.
  In all circumstances please save all packaging material and paperwork for the order. Please be aware that if you dispose of packaging material or attempt to return the merchandise without contacting the fulfiller, you jeopardise your chances of making a claim, and you may not receive a credit for the return.