07.07.2020

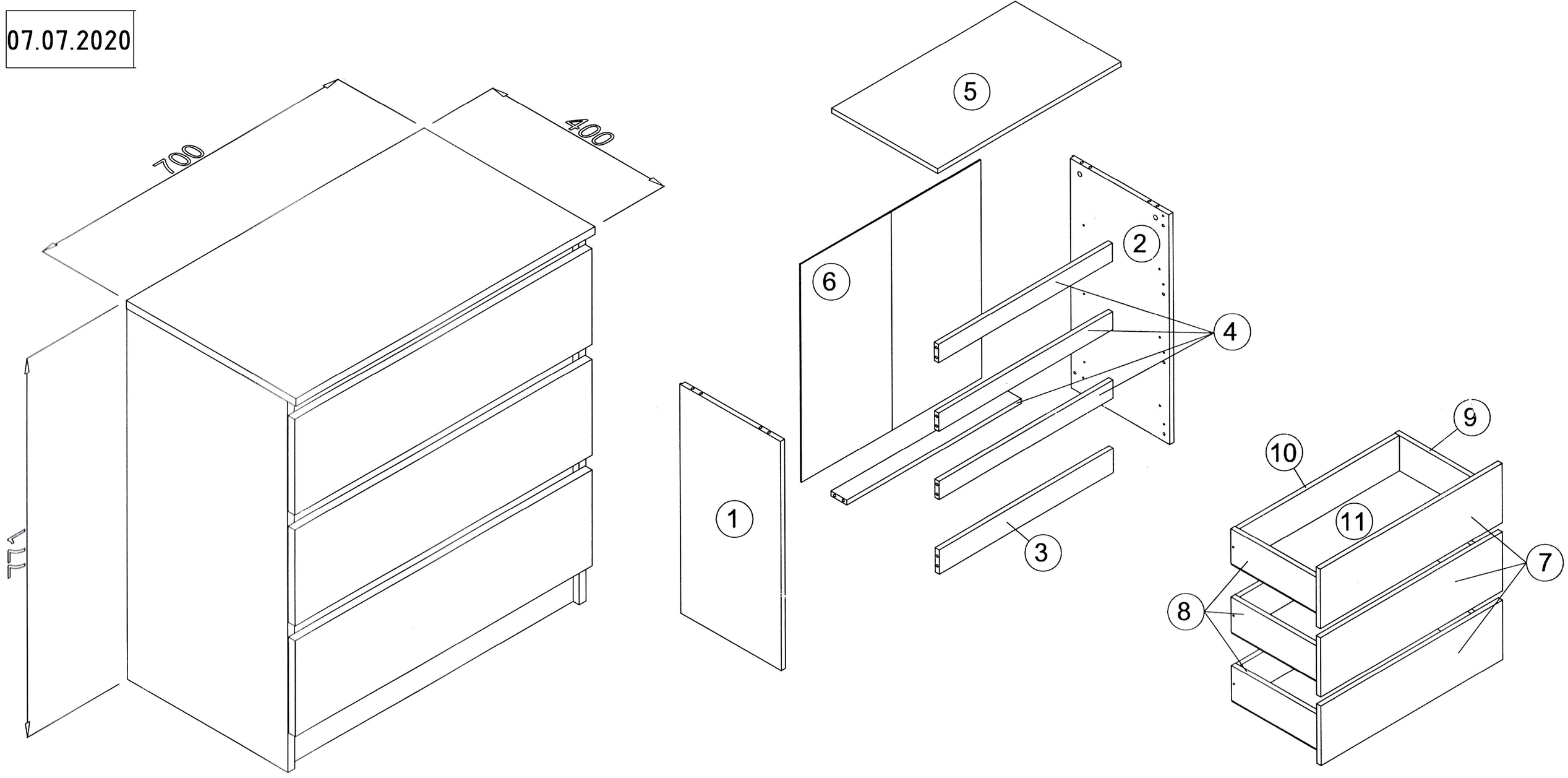
700
400
775
1
2
3
4
5
6
7
8
9
10
11

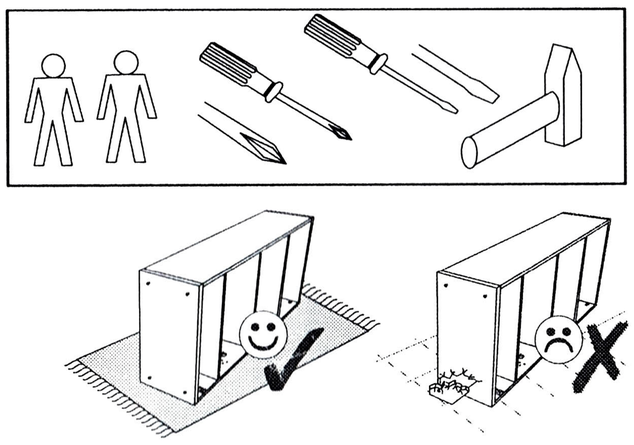

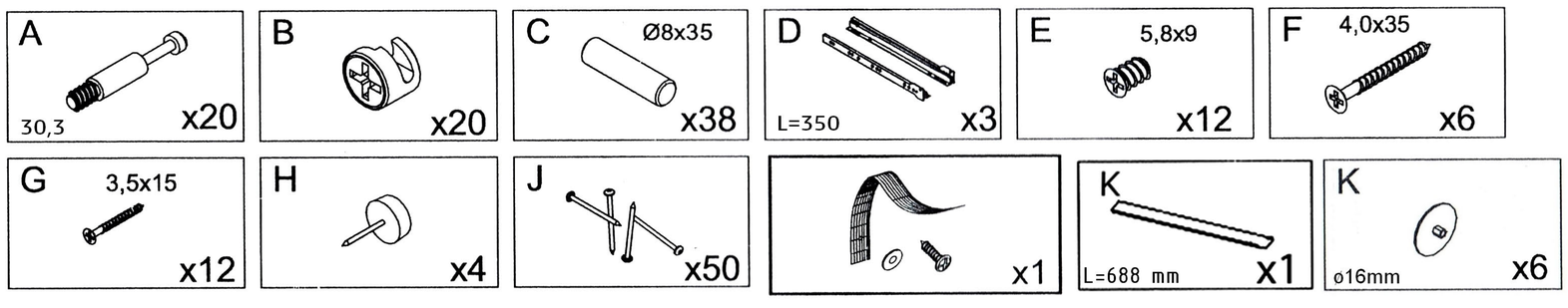
A
30,3
x20
B
x20
C
Ø8x35
x38
D
L=350
x3
E
5,8x9
x12
F
4,0x35
x6
G
3,5x15
x12
H
x4
J
x50
x1
K
L=688 mm
x1
K
ø16mm
x6

# 1

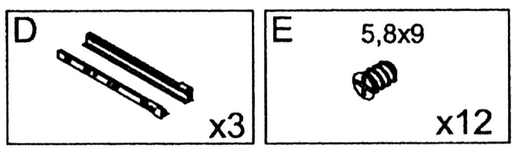
D
x3


E
5,8x9
x12

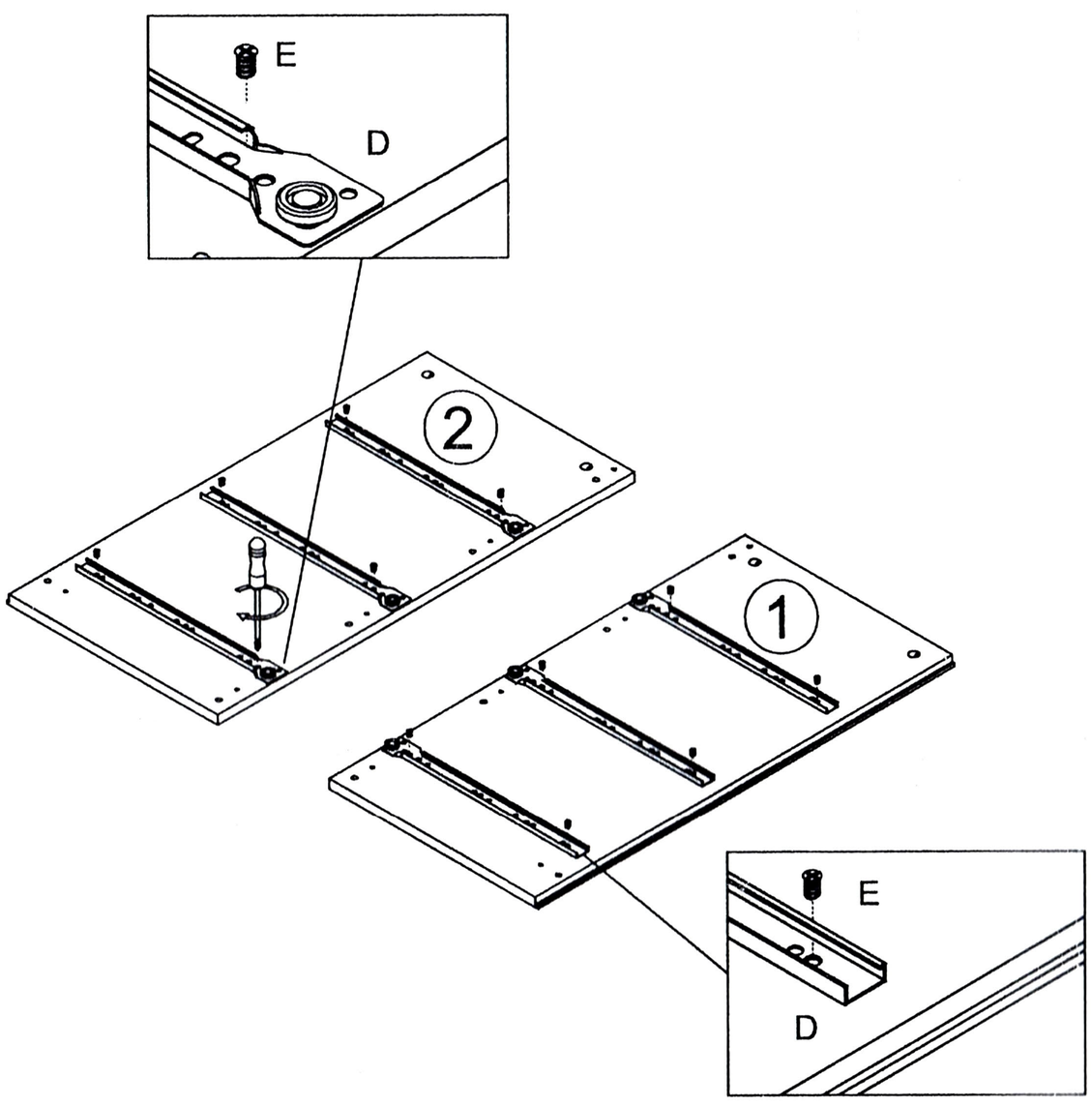
E
D
2
1
E
D

# 2

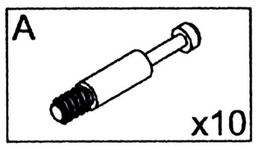
A
x10

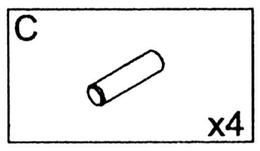
C
x4

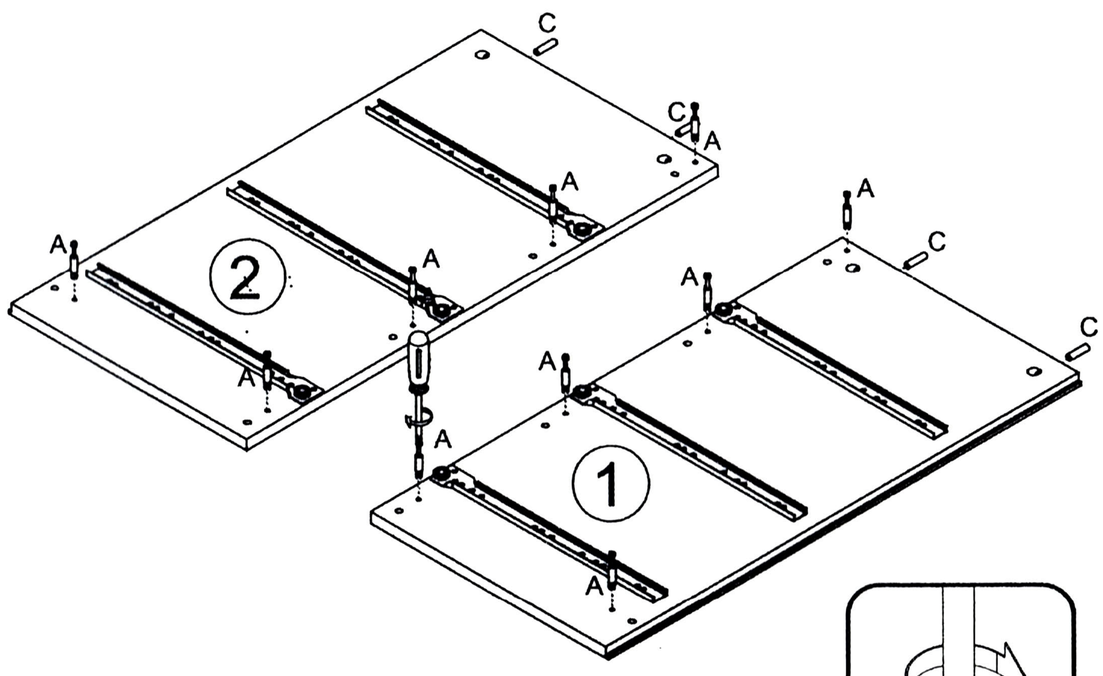
C
A
2
1

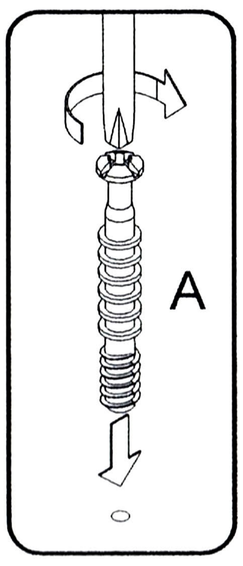
A

# 3

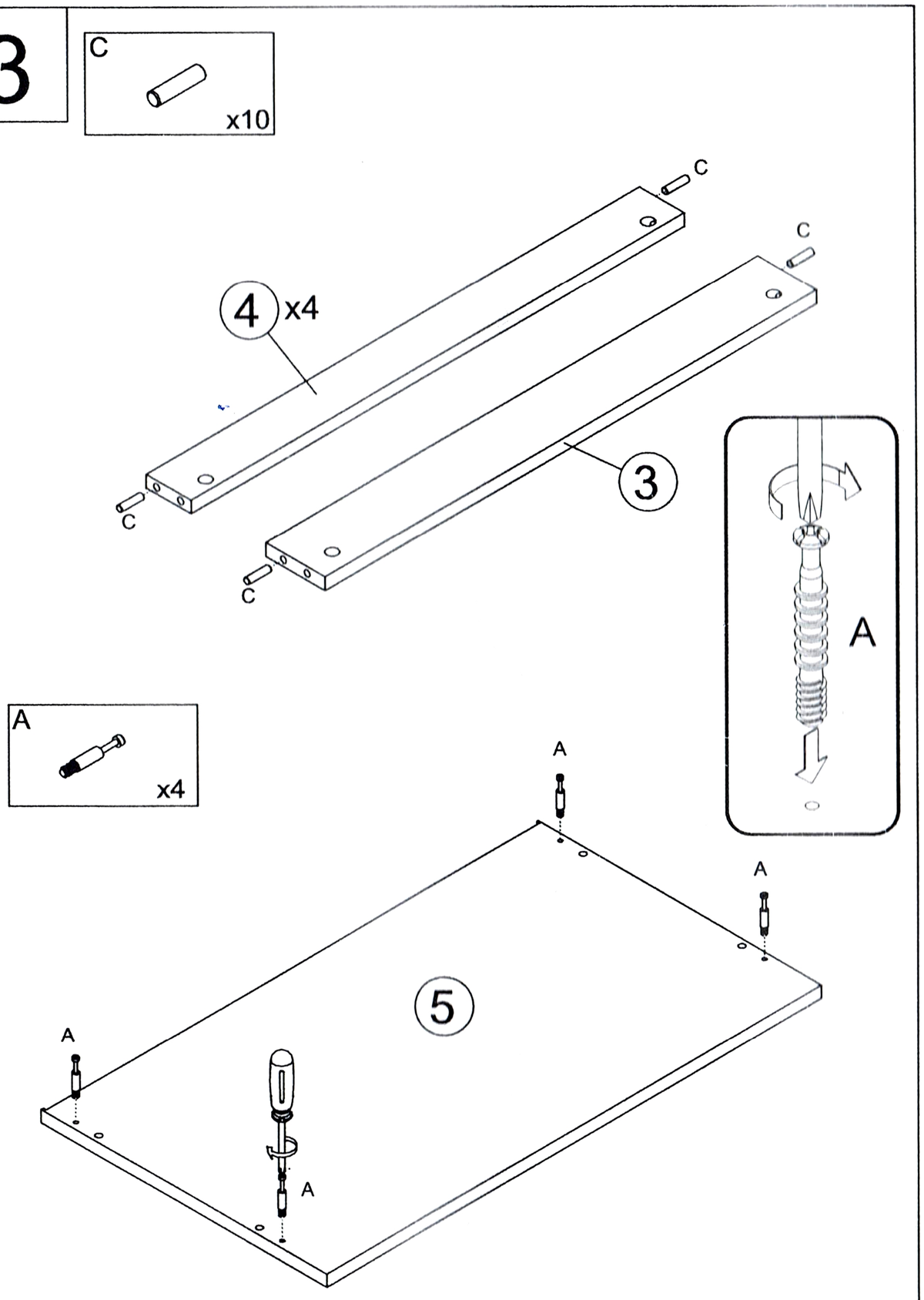
C
x10
C
C
4
x4
3
C
C
A
x4
A
A
A
A
5

# 4

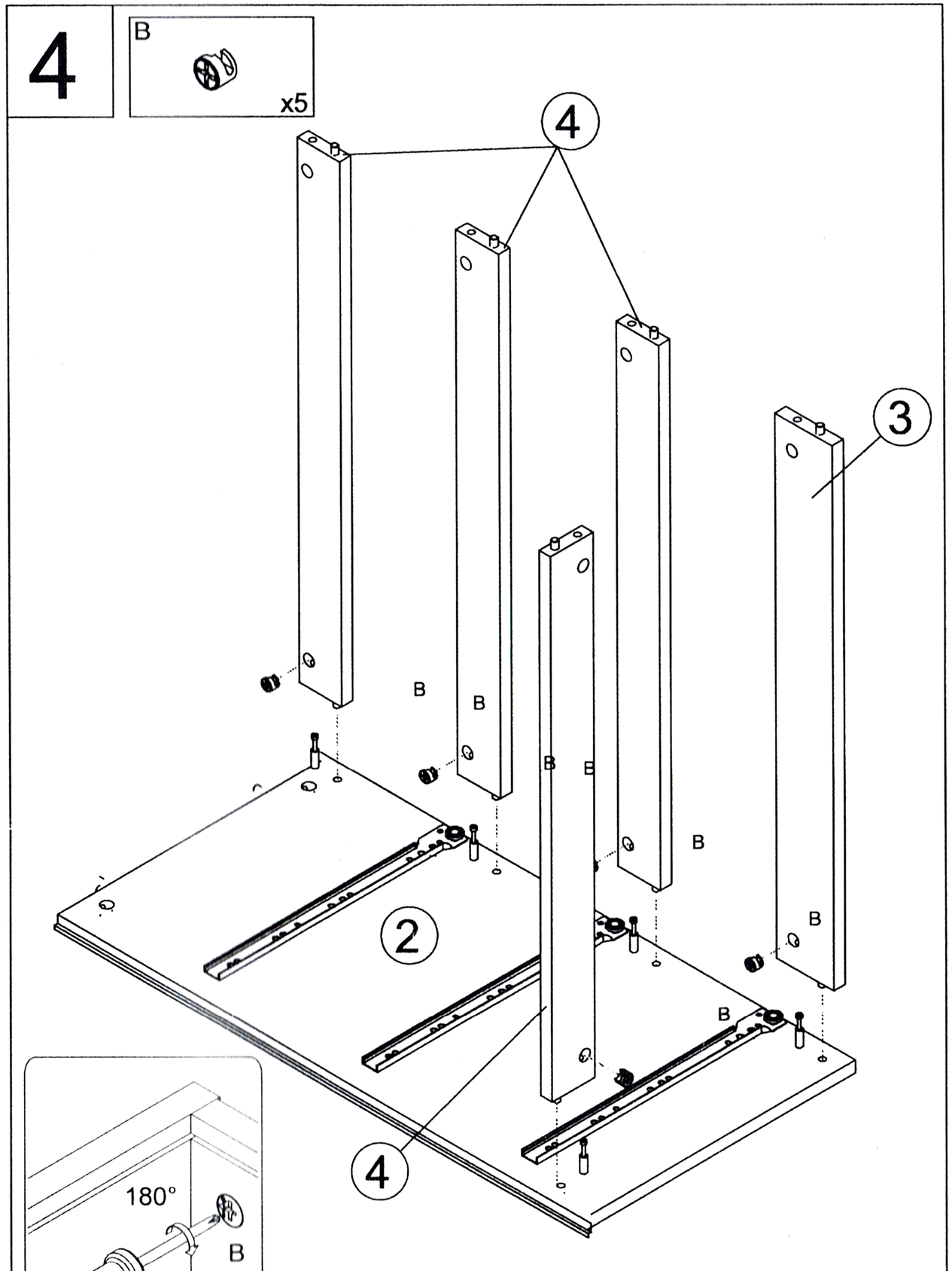
B
x5
4
3
B
B
B
B
B
B
B
2
B
4
180°
B

# 5

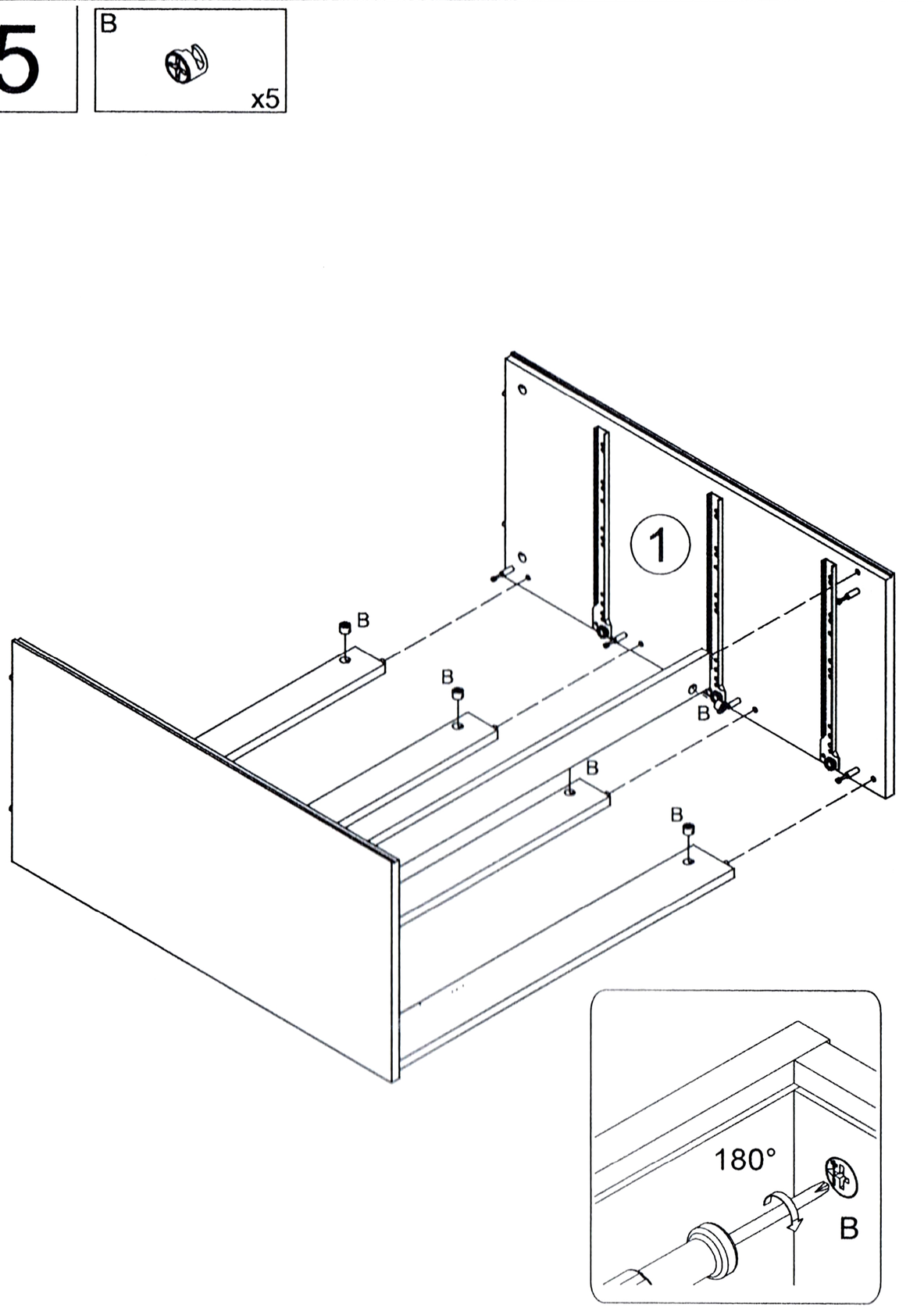
B
x5
1
B
B
B
B
B
180°
B

# 6

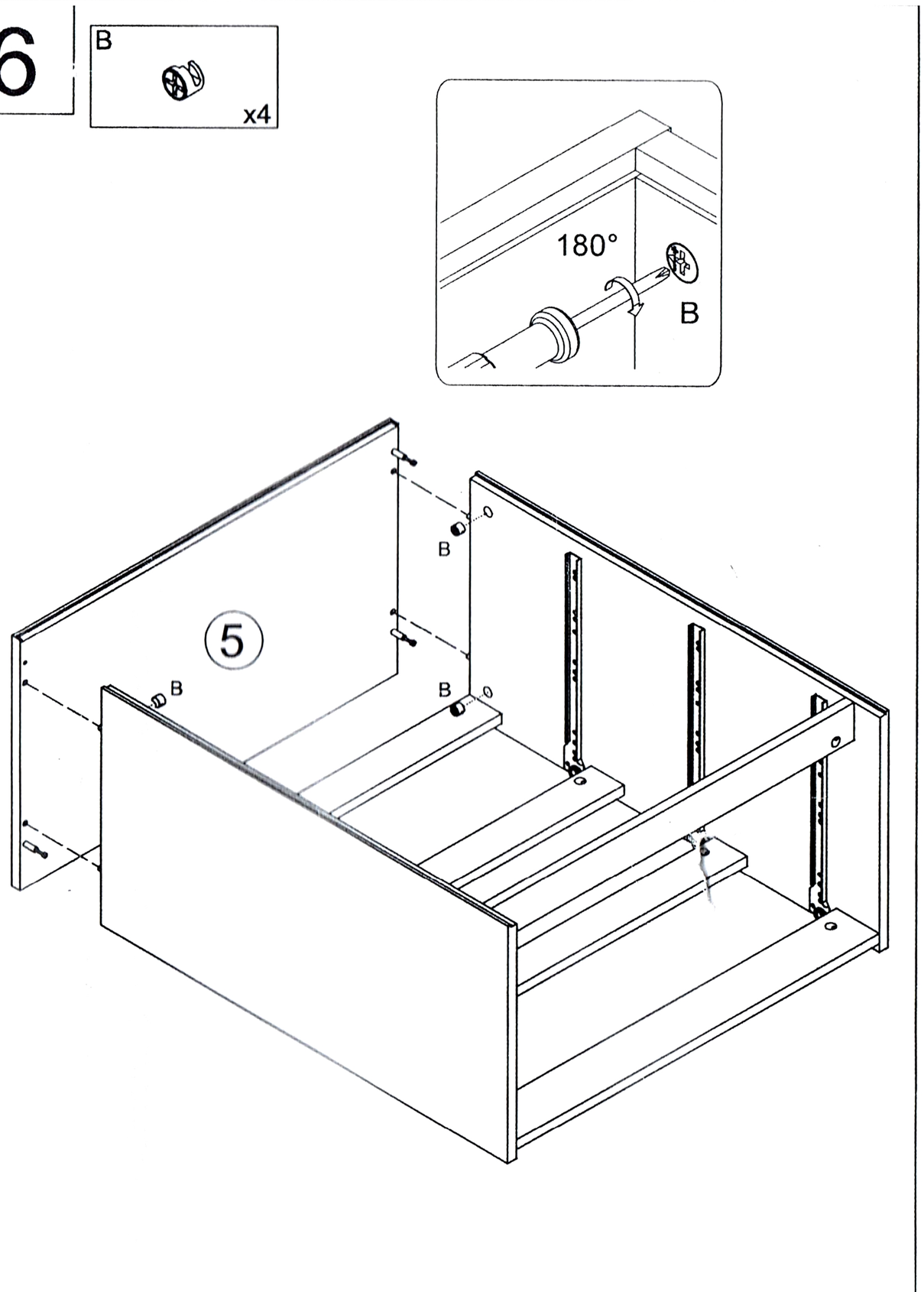
B
x4
180°
B
B
5
B
B

# 7

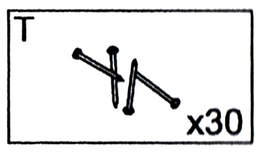
T
x30

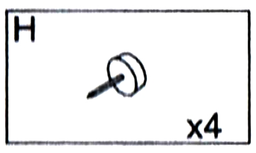
H
x4

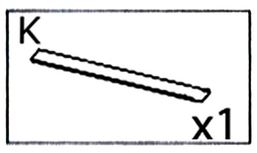
K
x1

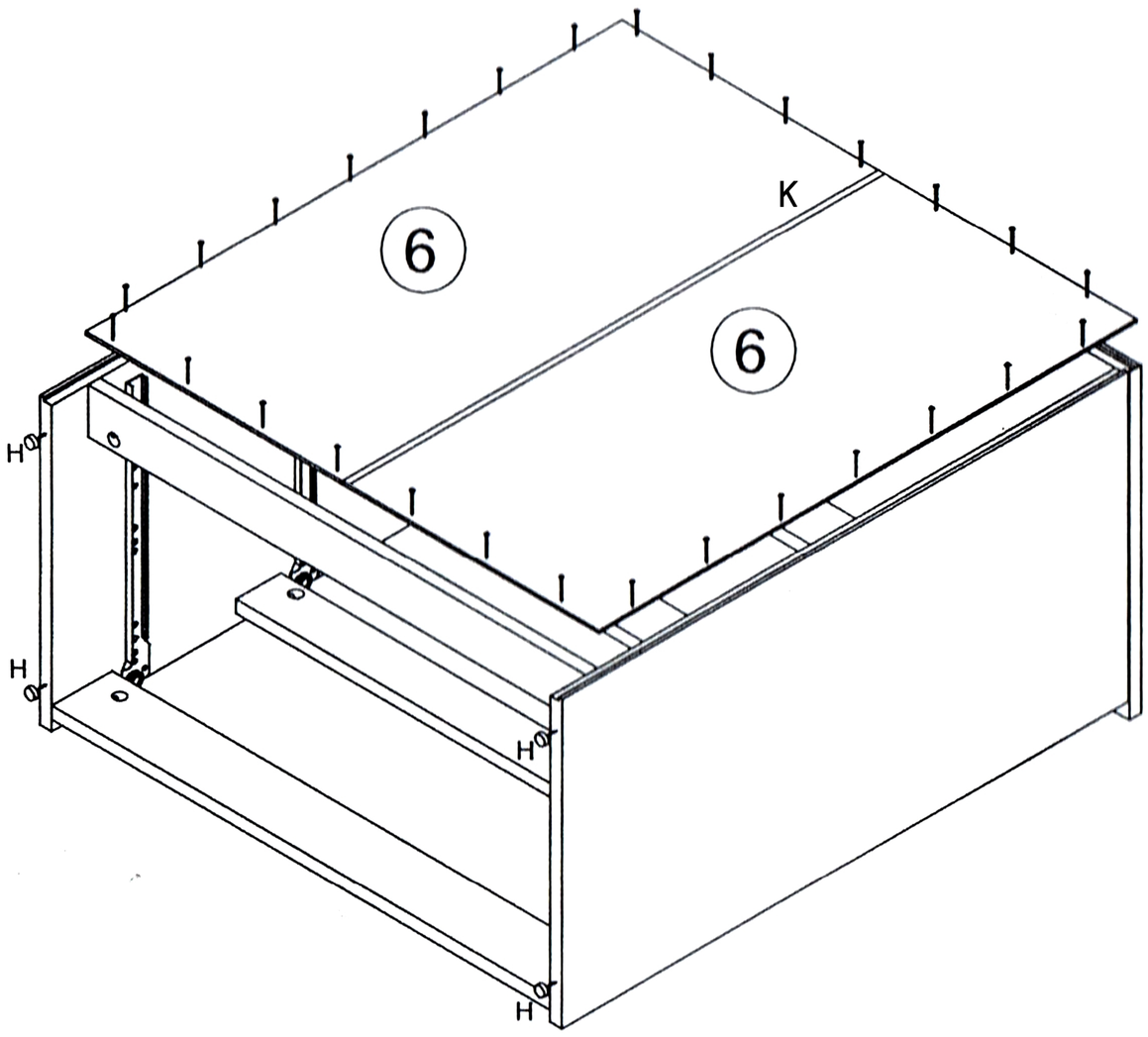
6
K
6
H
H
H
H

# 8

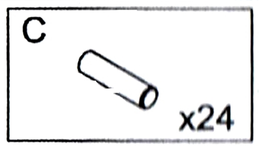
C
x24

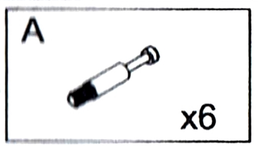
A
x6

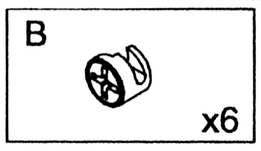
B
x6

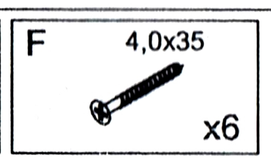
F
4,0x35
x6

x3

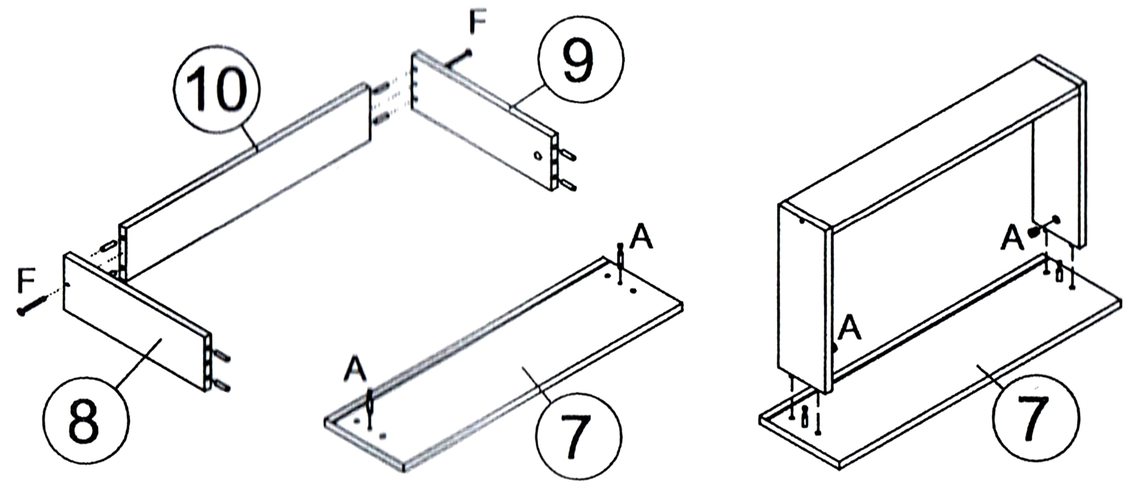
10
F
9
F
8
A
A
7
A
A
7

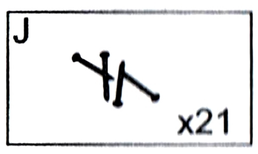
J
x21

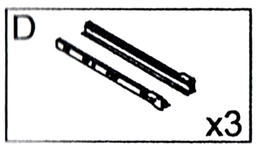
D
x3

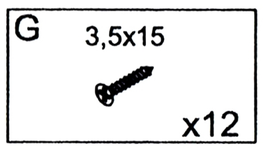
G
3,5x15
x12

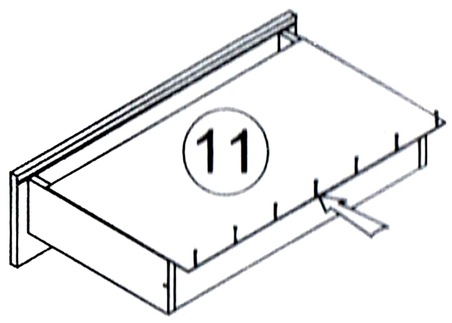
11

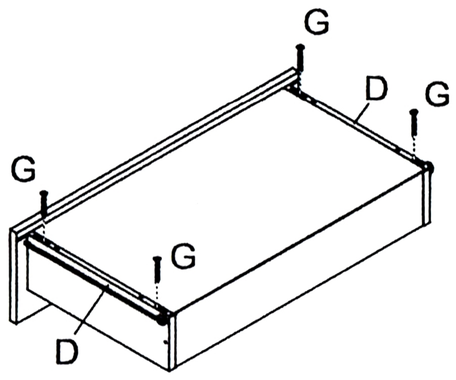
G
D
G
G
G
D

# 9

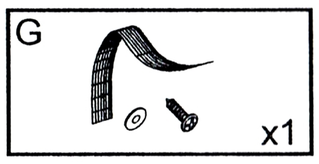
G
x1

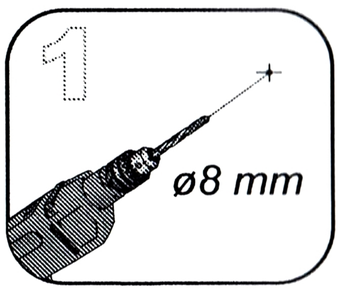
1
ø8 mm

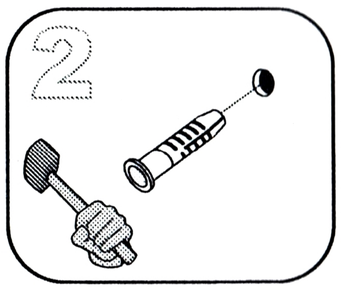
2

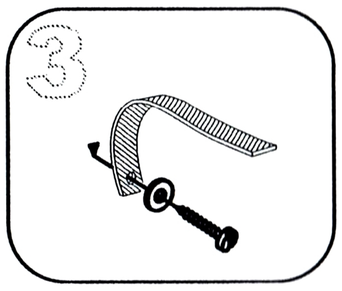
3

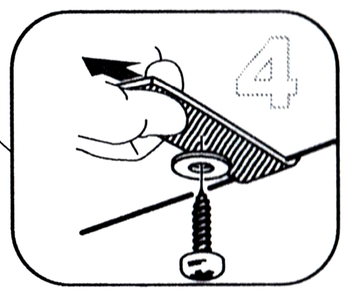
4

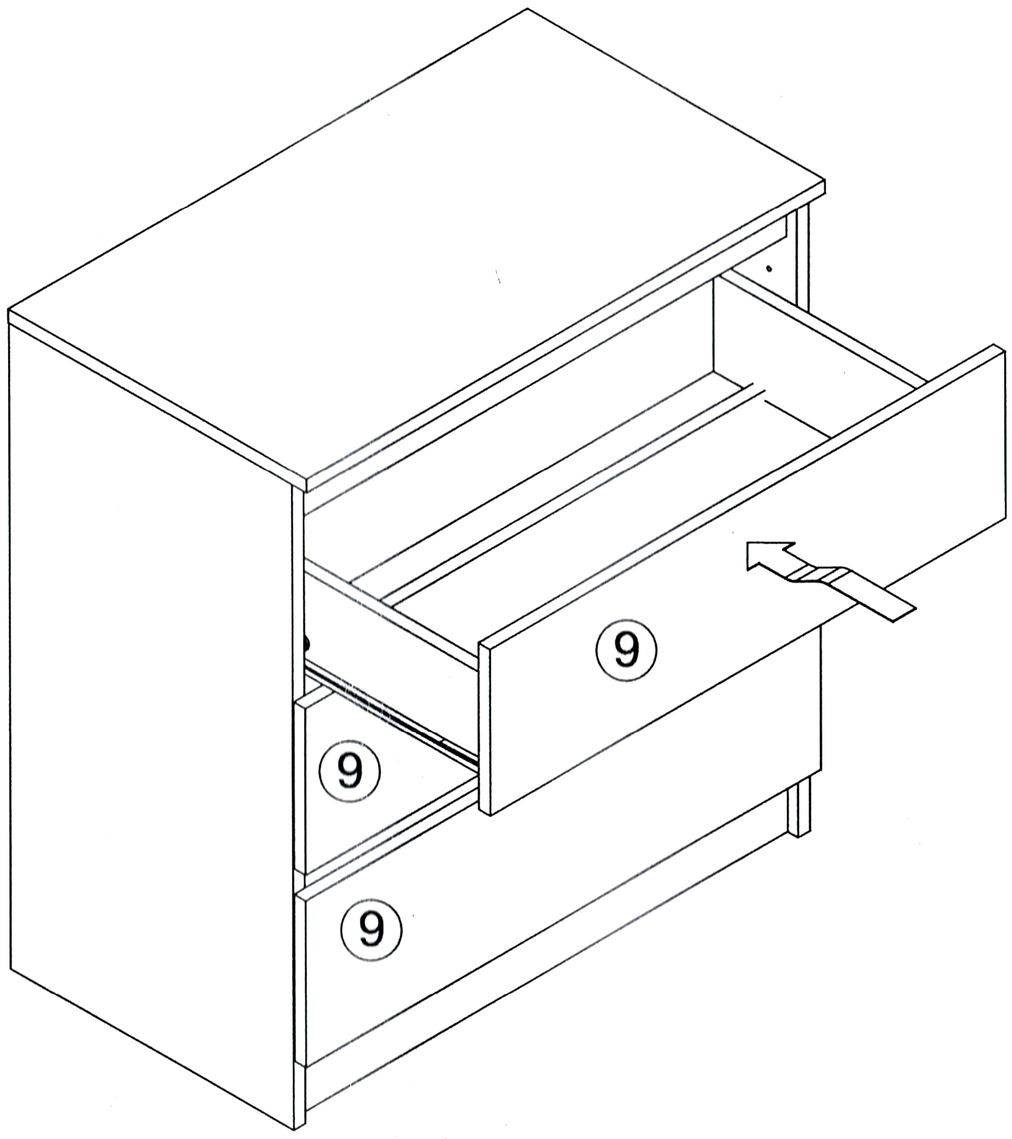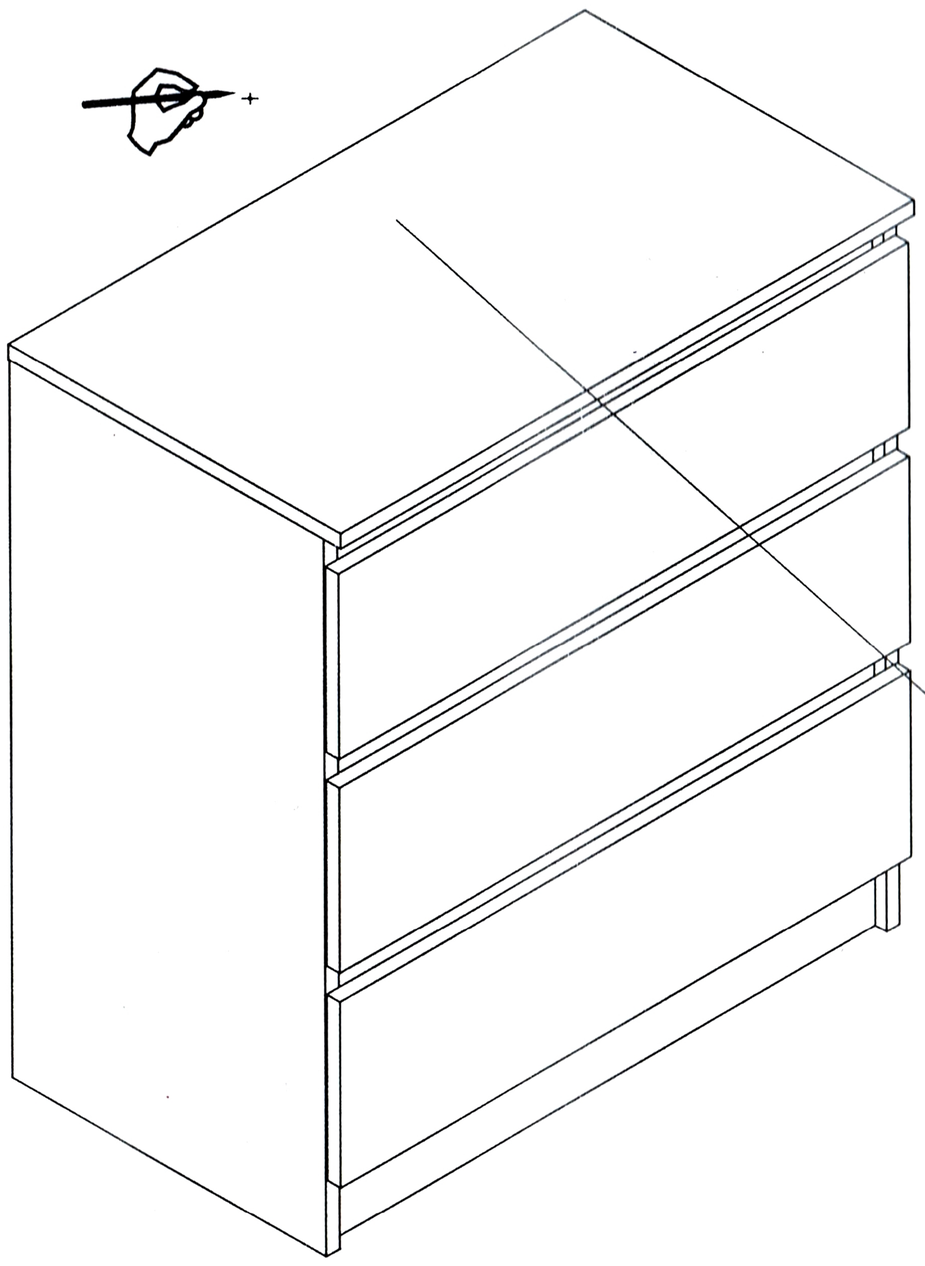
9
9
9