# MTI071124

# TRACKSMART ADJUSTABLE WIRE CLOSET KIT

PROWORX and logo design are trademarks

or registered trademarks of Metaltec Inc. All rights reserved.

amazon

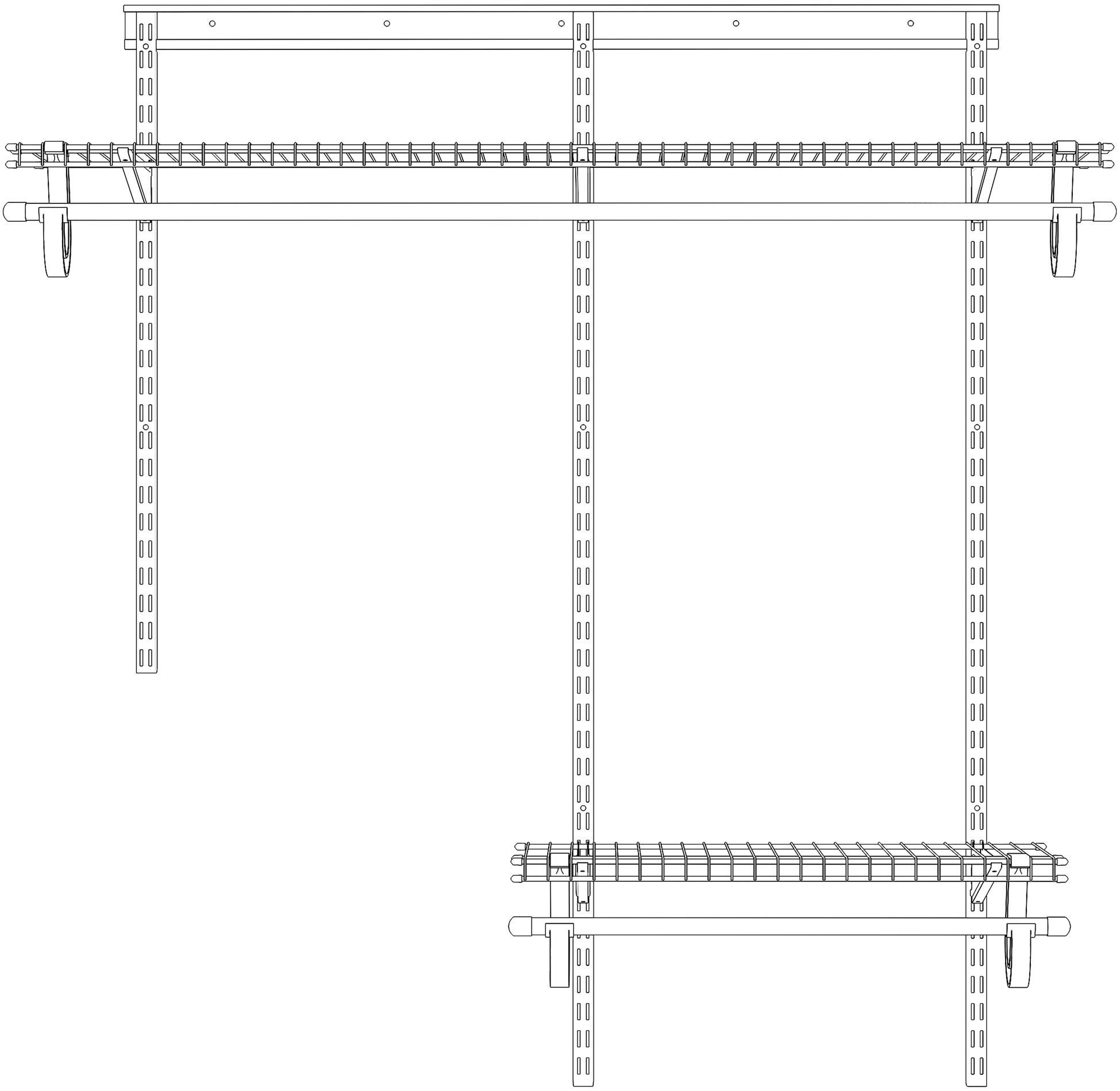

**Questions, problems, missing parts?**

Our product team will respond to your message
within 24 hours and provide a solution to the problem.
service@ecmmt.com

## TABLE OF CONTENTS

Package Contents.....3

Hardware Contents.....4

Safety Information. .....4

Preparation.....5

Assembly or Installation Instructions.....6

Care and Maintenance .....8

Warranty.....8

## PRODUCT SPECIFICATIONS

| SPECIFICATIONS |
| --- |
| Fits 2-ft to 4-ft width closets |
| Steel shelf construction |
| 11-lb load capacity per linear foot |

# PACKAGE CONTENTS

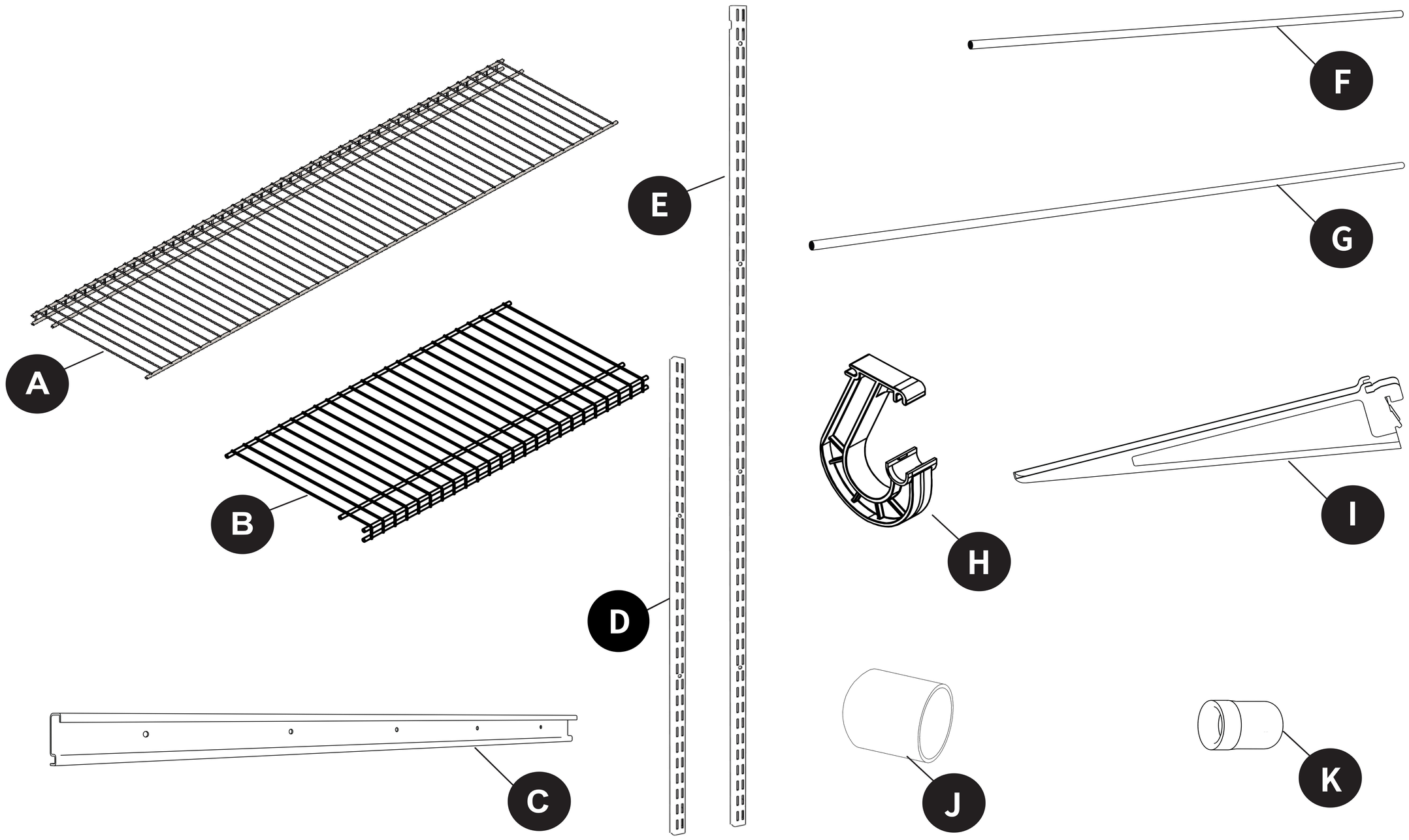


| PART | DESCRIPTION | QUANTITY |
|---|---|---|
| A | 4-ft Shelf | 1 |
| B | 2-ft Shelf | 1 |
| C | 40-in Top Rail | 1 |
| D | 30-in Standard | 1 |
| E | 48-in Standard | 2 |
| F | 2-ft Closet Rod | 1 |
| G | 4-ft Closet Rod | 1 |
| H | Closet Rod Support Hook | 6 |
| I | Shelf Bracket | 6 |
| J | Closet Rod Cap | 6 |
| K | Shelf End Cap | 24 |

## HARDWARE CONTENTS (shown actual size)

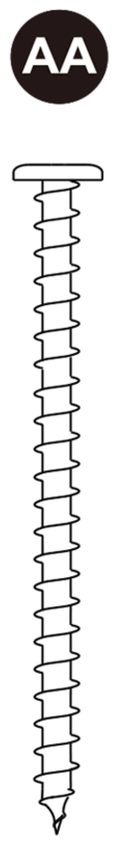


2-in
Pan Head Screw

Qty. 10

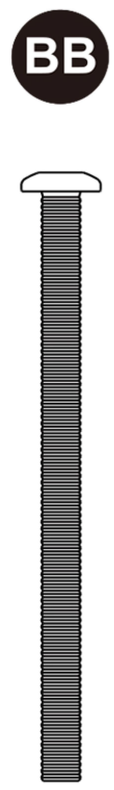


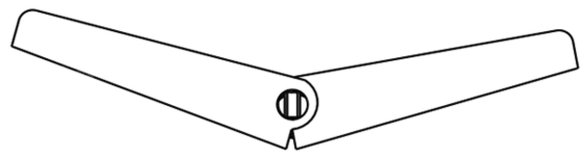

3/16-in
Toggle Bolt

Qty. 10

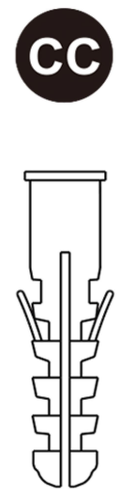


1/4-in Anchor

Qty. 10

## SAFETY INFORMATION

Please read and understand this entire manual before attempting to assemble, operate or install the product.

**IMPORTANT INFORMATION**

Failure to follow recommended installation instructions can lead to serious injury.

Do not overload the rack systems and use appropriate, recommended fasteners when installing the shelving standards and racking systems.

## PREPARATION

Before beginning assembly of product, make sure all parts are present. Compare parts with package contents list and hardware contents list. If any part is missing or damaged, do not attempt to assemble the product.

**Estimated Assembly Time: 2-3 Hours**
Additional time may be needed for closet structure modifications.

Tools Required for Assembly (not included): tape measure, pencil, power drill/driver with Phillips bit, level, flat blade screwdriver, hack saw, 1/2-in & 1/4-in drill bits, rubber mallet, stud finder

Helpful Tools (not included): step ladder, 1/4-in masonry drill bit if installing on block or concrete wall

## DESIGN OPTIONS

Before you start installation, measure width of your closet and choose the layout that you prefer.
This kit will not exceed 4 feet wide layout.
Note: 2-ft wide options require the top rail shelf and rod to be cut to 24-inches wide.
Note: 3-ft wide options require the top rail shelf and rod to be cut to 36-inches wide.

**2-ft**
**0.61m**

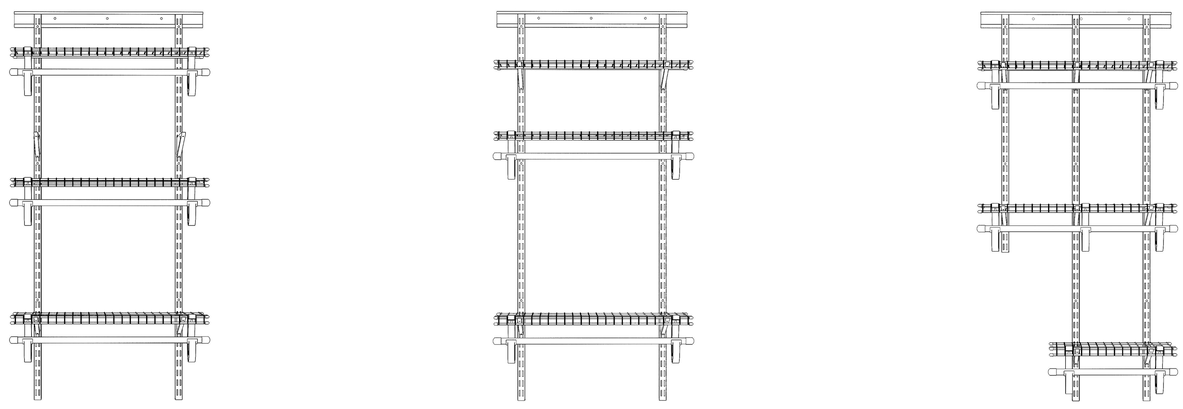

**3-ft**
**0.91m**

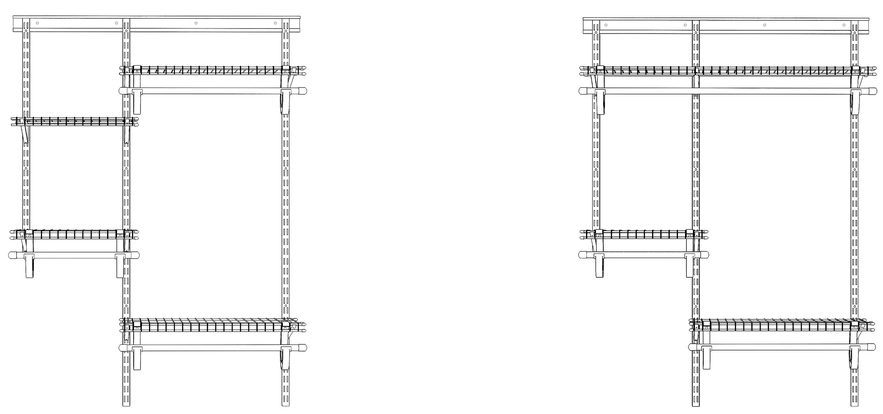

**4-ft**
**1.21m**

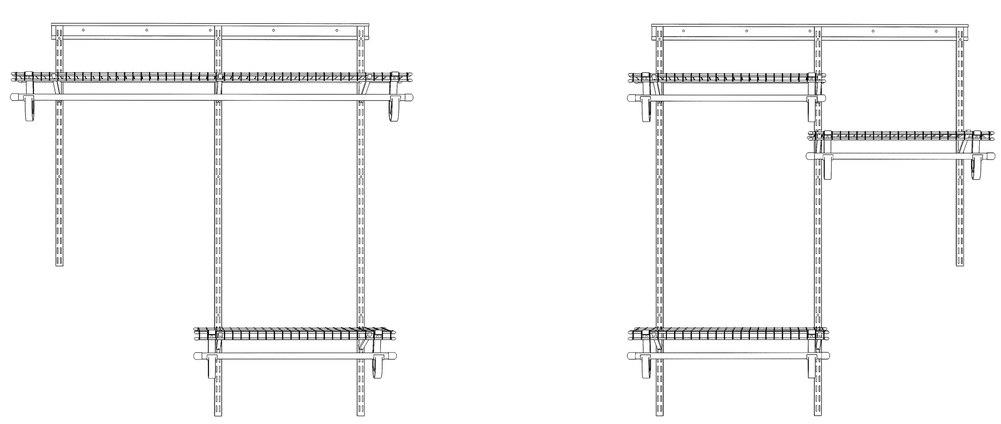

1. Marking Top Rail

   Top Rail for all sizes must be must at 7-ft. Measure up 7-ft from floor and hold top rail in place. Use a level to be sure all rails are level, then mark all hole locations on wall.
   See illustrations for top rail layout.

   2-ft Closet
   Note: The top rail shelf and rod must be cut to 24 inches wide for the 2-ft option.

   3-ft Closet
   Note: The top rail shelf and rod must be cut to 36 inches wide for the 3-ft option.

   4-ft Closet:No cutting needed.

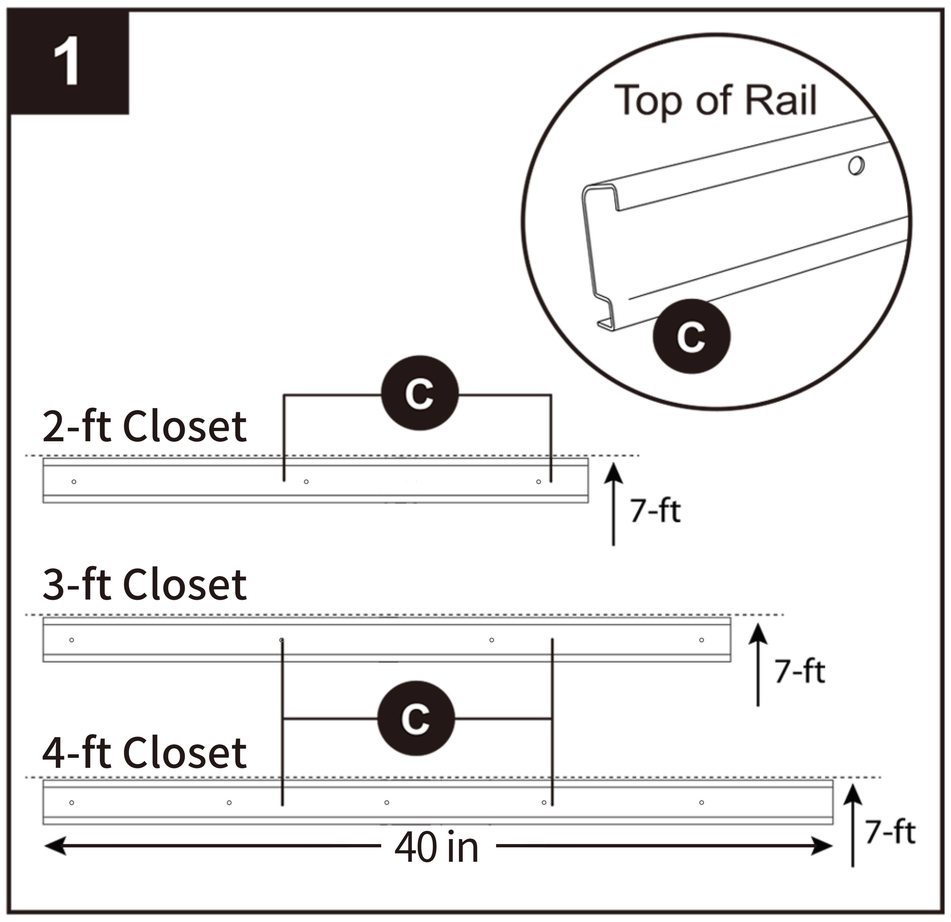


2. Securing Top Rail

   Secure rail using all holes. Do not leave any holes unfastened.
   Start by locating studs in wall. The top rail will be secured with 2-in pan head screws wherever aligned with a stud.
   Mark other locations on drywall that do not align with studs. Drill 1/2-in holes for toggle bolt use. Separate the toggle from the bolt. Insert bolts through the rail and re-install toggle as shown. Keep the toggle loose at this point.
   Place top rail to wall, collapse toggle and push through the holes in the drywall. Tighten toggle bolt with screwdriver to secure rail. Do not over tighten.
   Now, go back to then stud locations and secure rail by driving 2-in pan head screws into studs.
   For concrete or block wall installation use the plastic anchors. Drill 1/4-in holes at all marked locations, insert anchors and secure rail with 2-in pan head screws.

   Note: Additional hardware may need to be purchased separately if your closet construction is not wood, drywall or masonry.

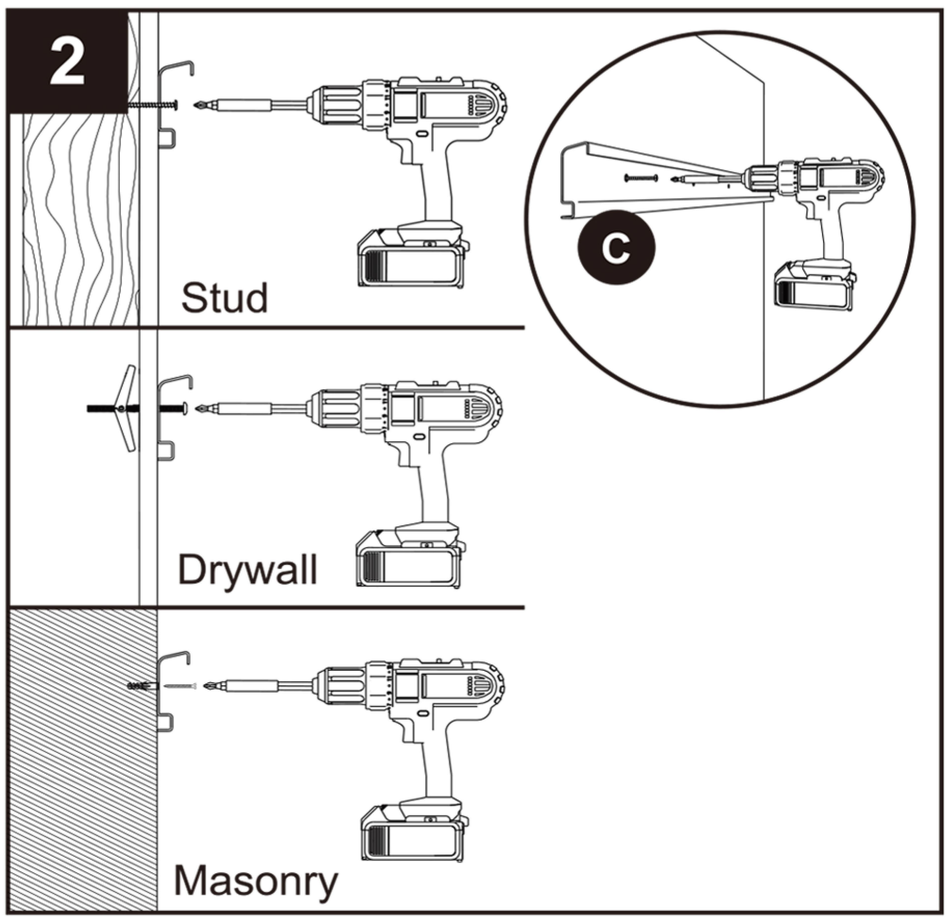


## Hardware Used

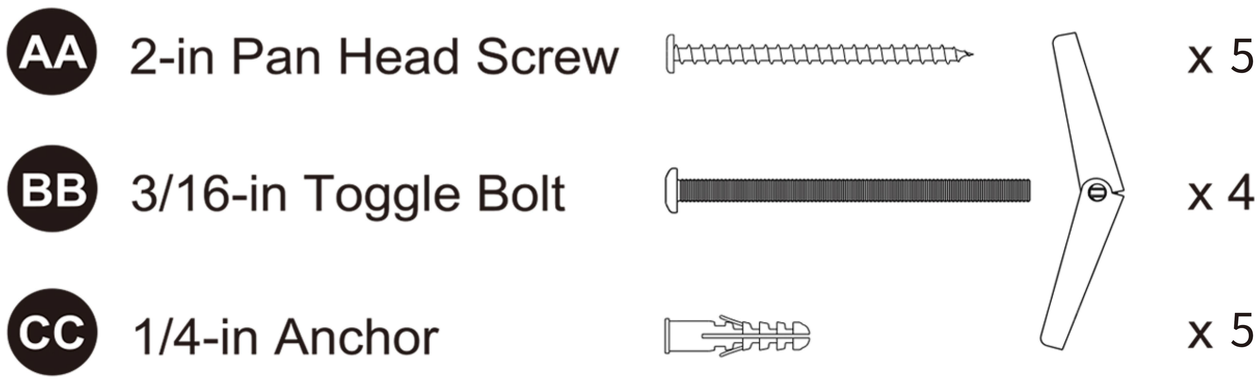


* Hardware count dependent on type of install

3. Install standards

   Install standards by hooking the top into the rail at an angle with the standard bottom away from wall and then let standard fall parallel with the wall to engage into the rail.

   See illustration for locations for 2-4 foot installations. Once all standards are in place, secure to wall through the second hole from the top. Use the same method previously used when securing rails, 2-in pan head screw where located on stud, toggle bolts for drywall or plastic anchor with pan head screws for concrete or masonry.

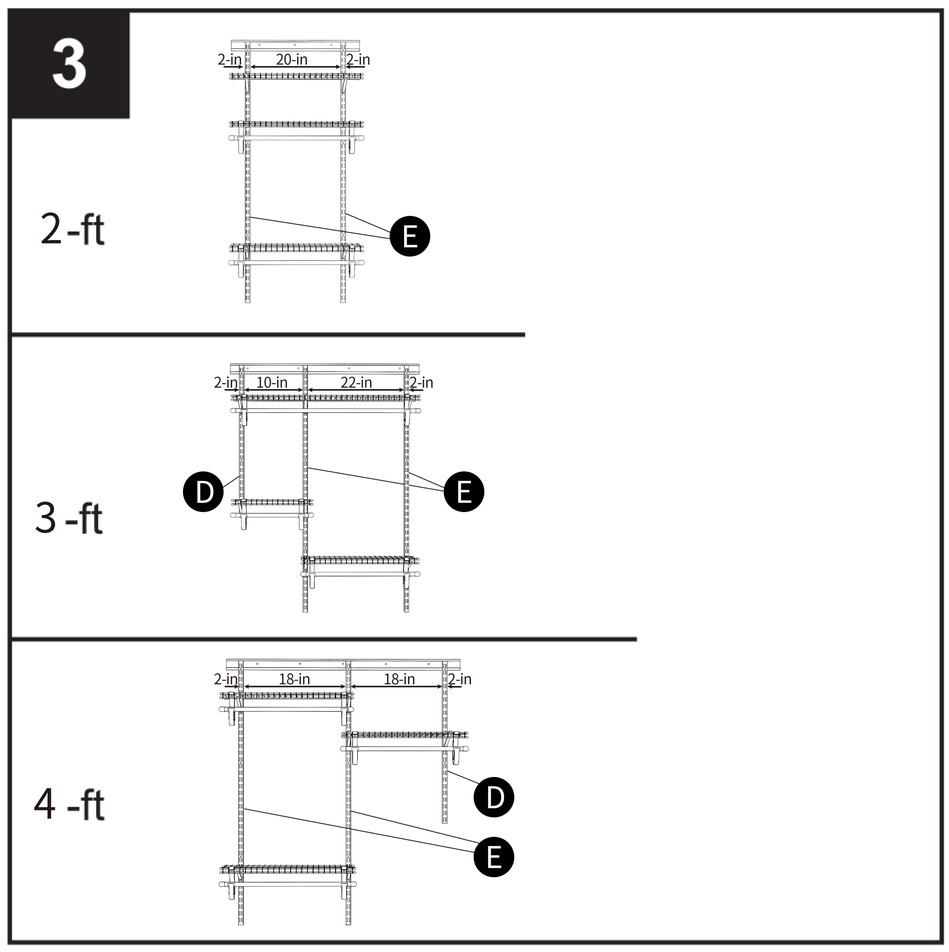


## Hardware Used

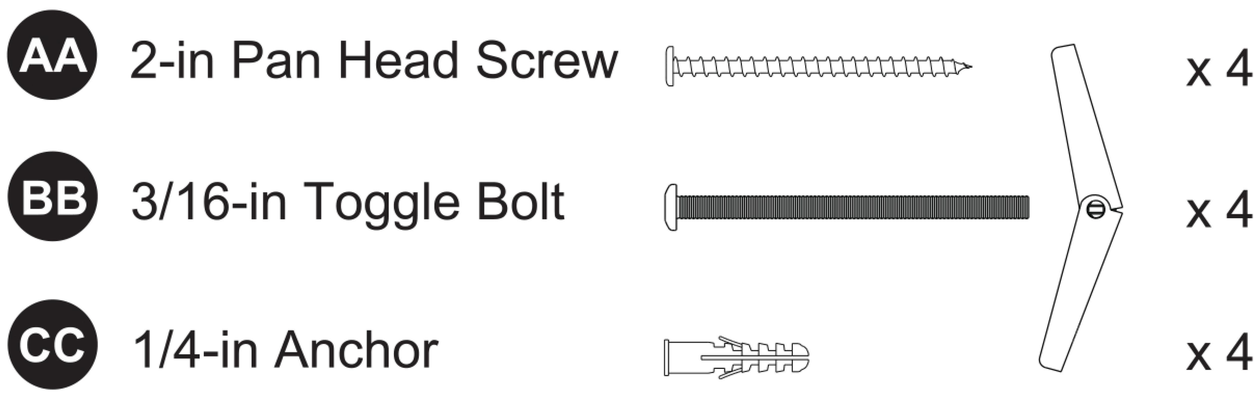


* Hardware count dependent on type of install

4. Install Brackets

   Install brackets into standards at desired heights.

   Review designs on page 5 or shelf placement options. Insert bracket into rectangular holes with the front raised, then drop front of bracket and tap downward to secure.

   4-ft shelves require 3 brackets

   2-ft shelves require 2 brackets

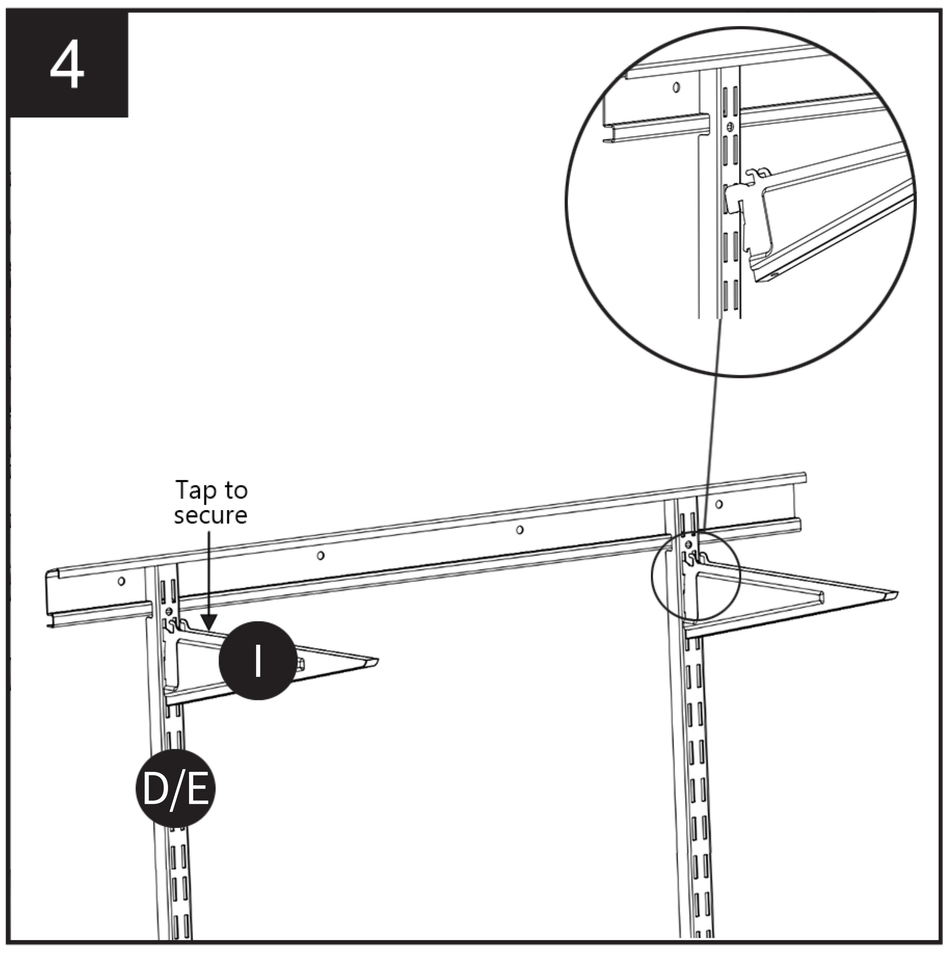


5. Install Shelves

   Place shelf caps on exposed rods on the sides of shelves.
   Place the shelf on installed brackets, hooking the front of the shelf over the end of the brackets. End of bracket will protrude through the front of the wire self.

   Then, push shelf backwards into the shelf hooks on the rear of brackets. Pull the shelf forward to lock shelf into place.

   Note: Shelves can be cut to size with hacksaw. Make cut on side of shelf that is facing wall. Cut edge will be concealed by shelf caps.

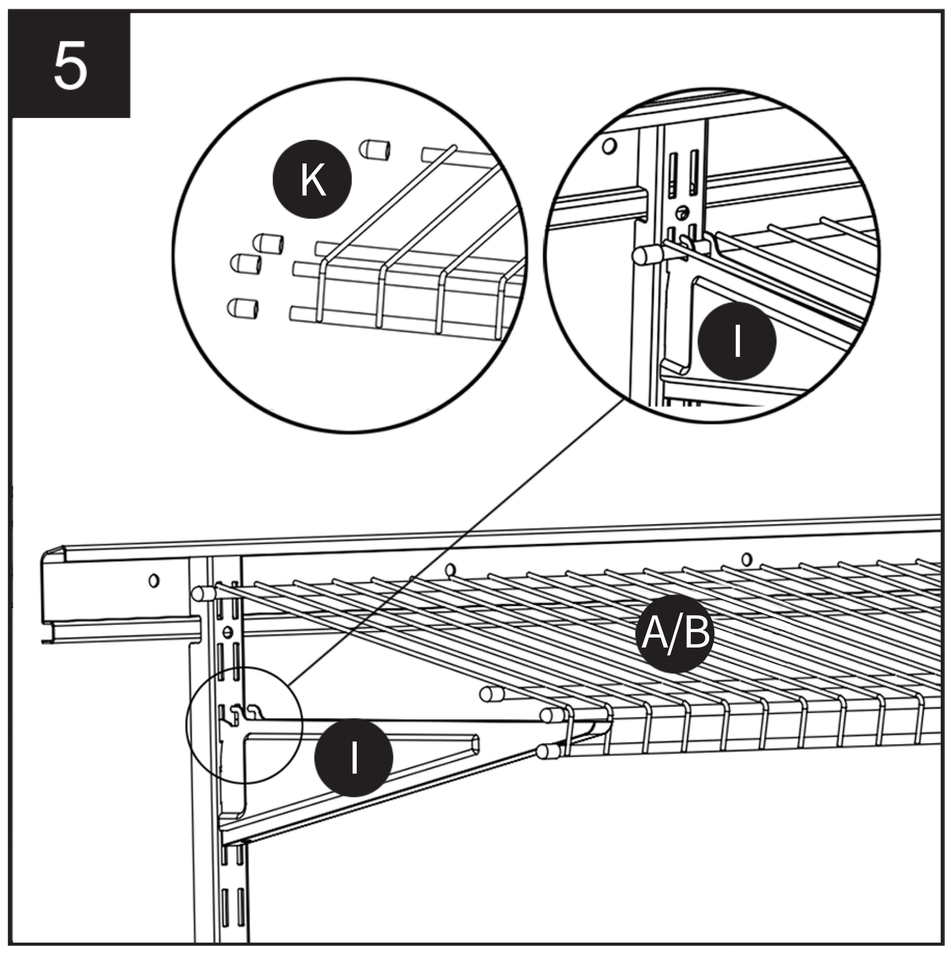

## ASSEMBLY INSTRUCTIONS

6. Install rod supports

   Start by attaching rod supports to the installed shelving at less than 3 feet apart.

   Push rod support up through the front of shelf between rods. Tilt rod support back to attach to second horizontal rod on shelf. Pull front of rod support downward to click onto the front horizontal rod.

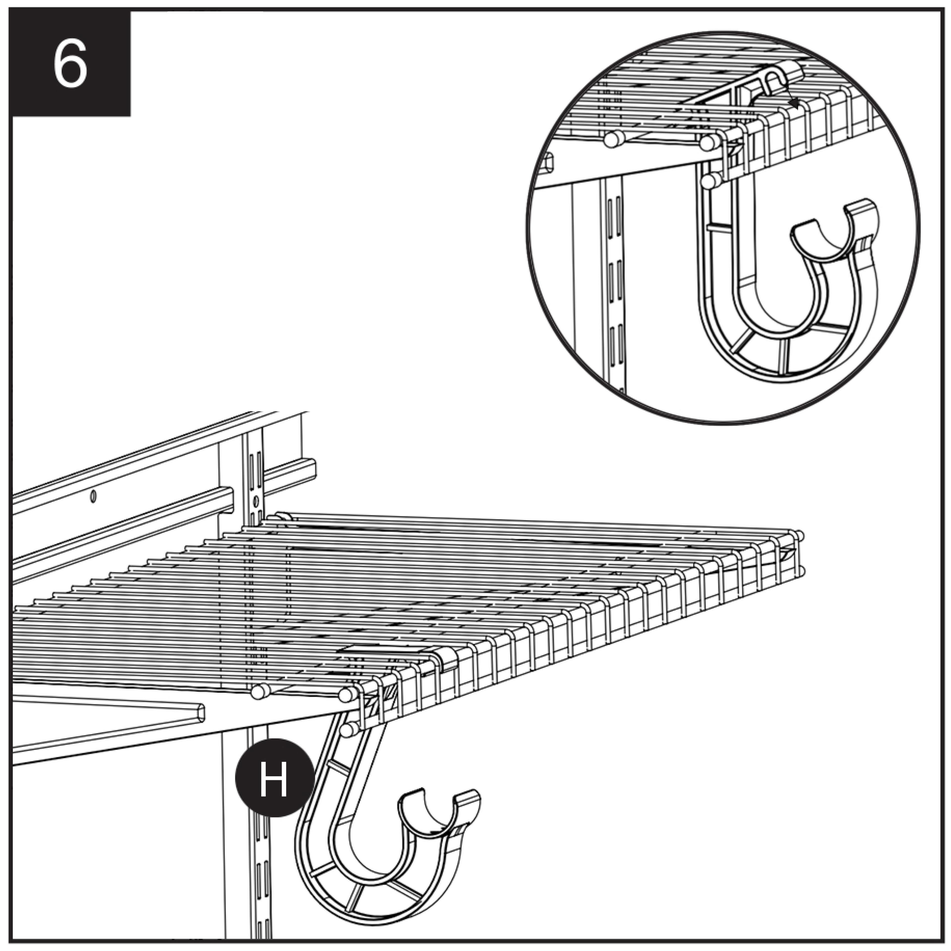


7. Install closet rods

   Add rod caps to each end of the closet rods by inserting caps into open ends of rods.

   Then, push the closet rod into the installed rod supports as shown clicking rod in place.

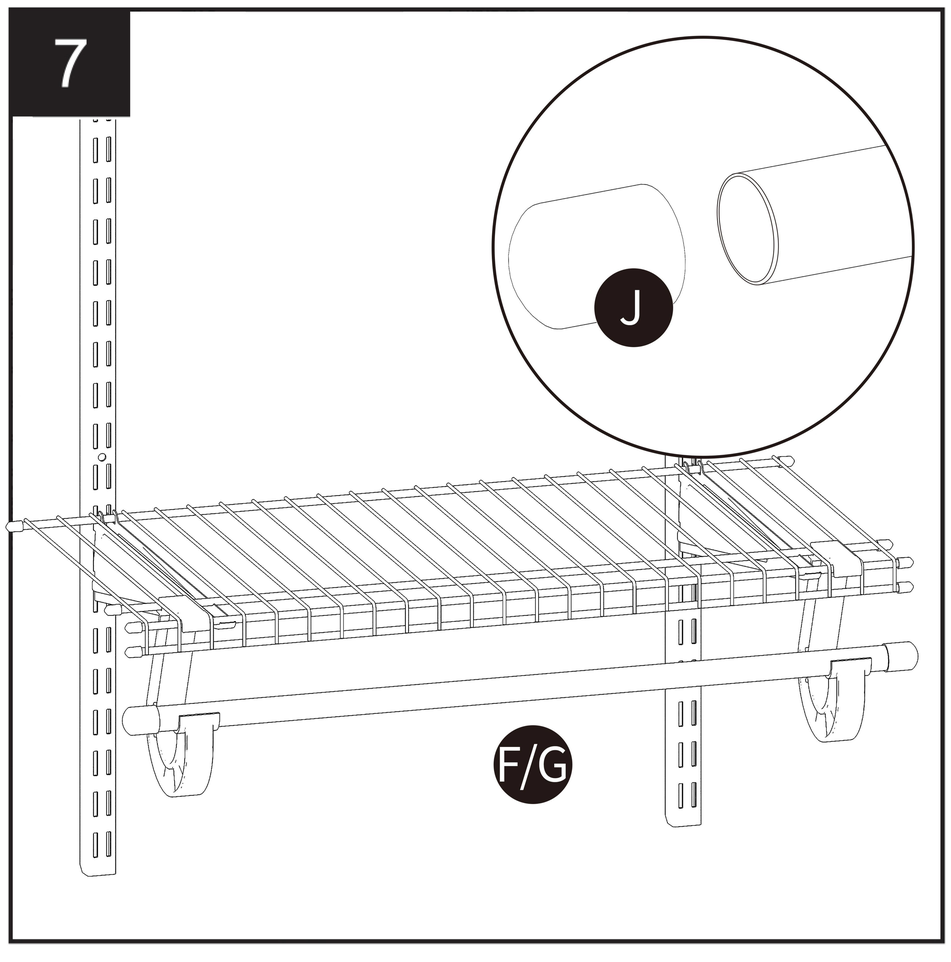


## CARE AND MAINTENANCE

- Clean with a spray multi-surface cleaner and towel