INSTALLATION INSTRUCTIONS

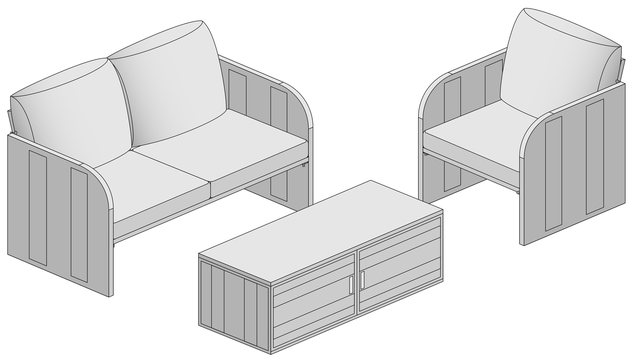

PARTS LIST

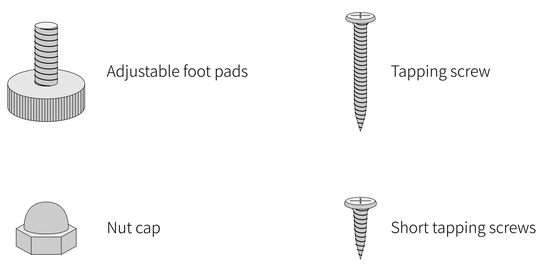

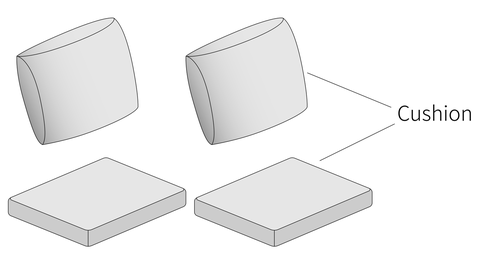

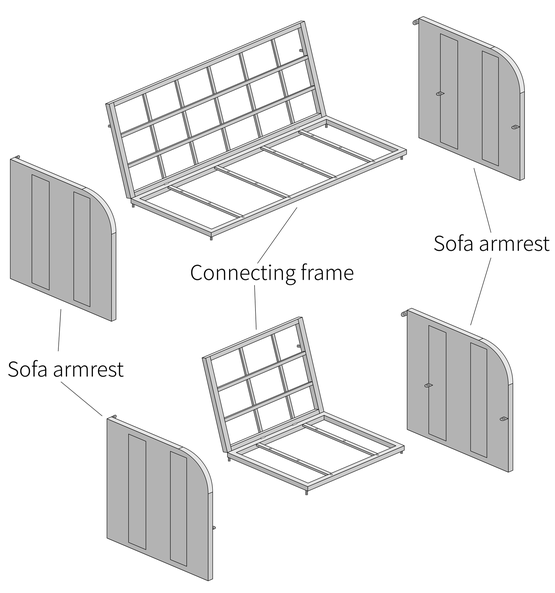

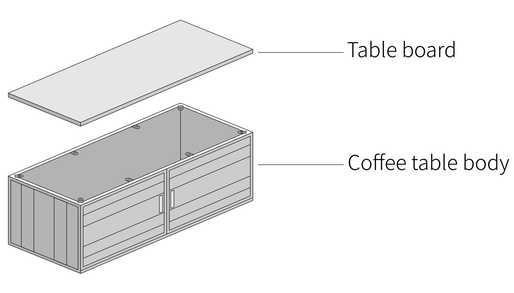

STEP 1

Connect the two Sofa armrest with a connecting frame
The screws on the connecting frame are aligned with the holes in the Sofa armrest

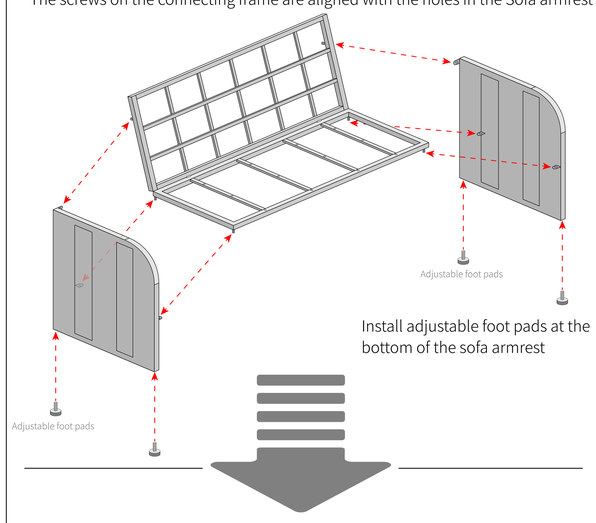

STEP 2

Secure the connecting frame with a cap nut

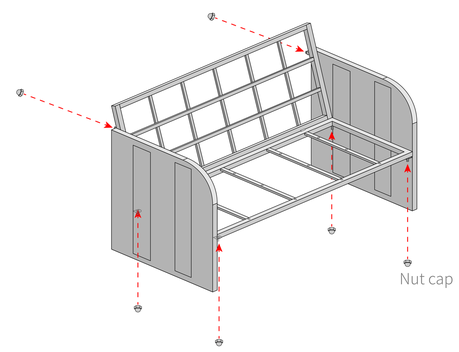

STEP 3

Place the backrest cushion on the sofa

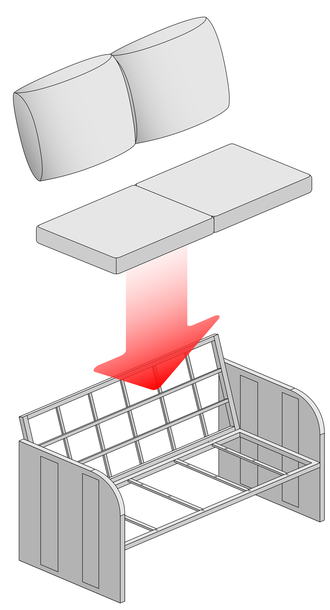

STEP 4

Secure with self-tapping screws from the bottom of the connecting frame

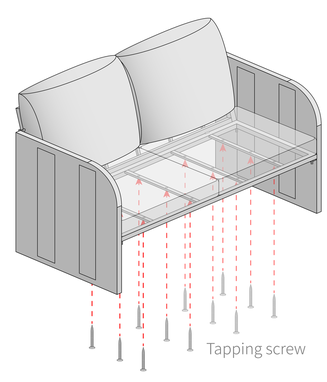

INSTALLATION COMPLETE

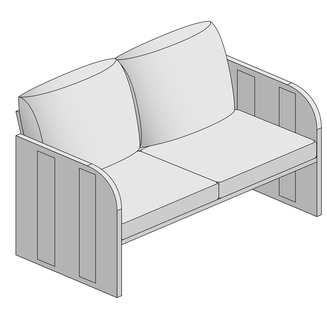

STEP 1

Connect the two Sofa armrest with a connecting frame
The screws on the connecting frame are aligned with the holes in the Sofa armrest

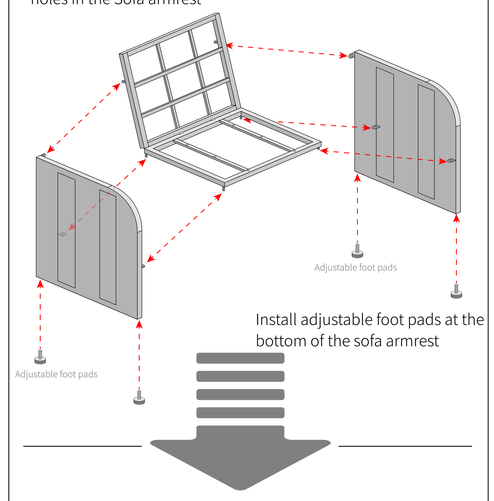

STEP 2

Secure the connecting frame with a cap nut

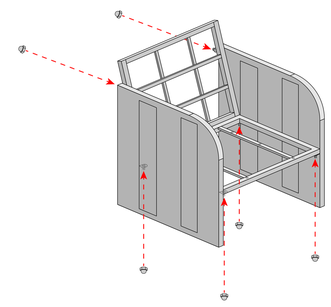

STEP 3

Place the backrest cushion on the sofa

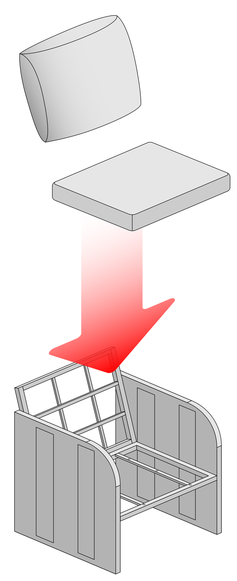

STEP 4

Secure with self-tapping screws from the bottom of the connecting frame

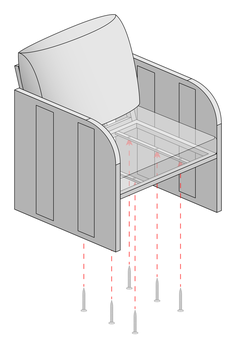

INSTALLATION COMPLETE

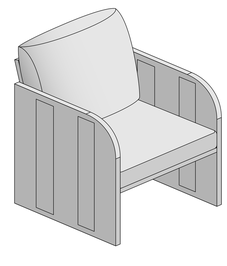

STEP 1

Place the body of the end table upside down on the table board

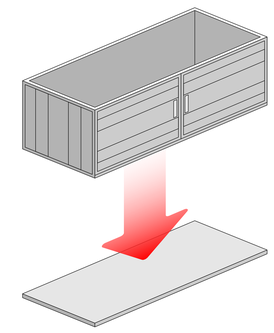

STEP 2

Secure with self-tapping screws

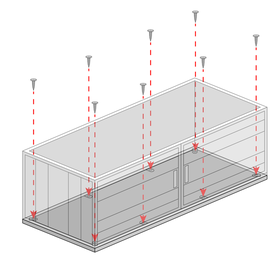
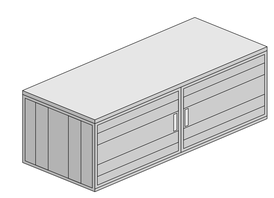
INSTALLATION COMPLETE