Birlea®

Assembly Instructions

Thank you for purchasing a Birlea product

For a chance to win a Love2Shop voucher simply post a picture of your new product on your preferred social channels tagging Birlea Furniture. One winner will be selected at random each month.
*Terms & conditions may apply.

Are you happy with your purchase?

Yes: That's great, we would love to hear more from you. Please leave us a review on our Trustpilot link on the QR code here. Your feedback will be greatly appreciated.

SCAN ME

No: If for any reason there is something missing, indifferent or incorrect with your order, please contact the retailer that you purchased your item from.

Please note that this items build time is around 35 minutes with 2 man build

www.birlea.com

ASSEMBLY INSTRUCTIONS
NOAH 3 DOOR SIDEBOARD

IMPORTANT: READ THESE INSTRUCTIONS CAREFULLY BEFORE ASSEMBLING OR USING YOUR NOAH 3 DOOR SIDEBOARD .

PLEASE KEEP THESE INSTRUCTIONS FOR FUTURE REFERENCE.

HEALTH & SAFETY:

DO NOT use this item if any parts are missing, damaged or worn.
DO NOT use this item unless all fixings are secured.
Please keep small parts out of reach of children.
Always use on a level, even surface.

CARE & MAINTENANCE:

Assemble in the room of use.
Assembly should be carried out with this item laying flat, not standing upright.
Assemble on a soft,clean surface to prevent damages.
To remove the printed numbers on the pieces,use the eraser provided.
Periodically check all screws & fixings to ensure they are secure.
DO NOT push the item as this will damage the base.
Always lift the item with two pepple to reposition.
Keep any sharp objects away from the item.

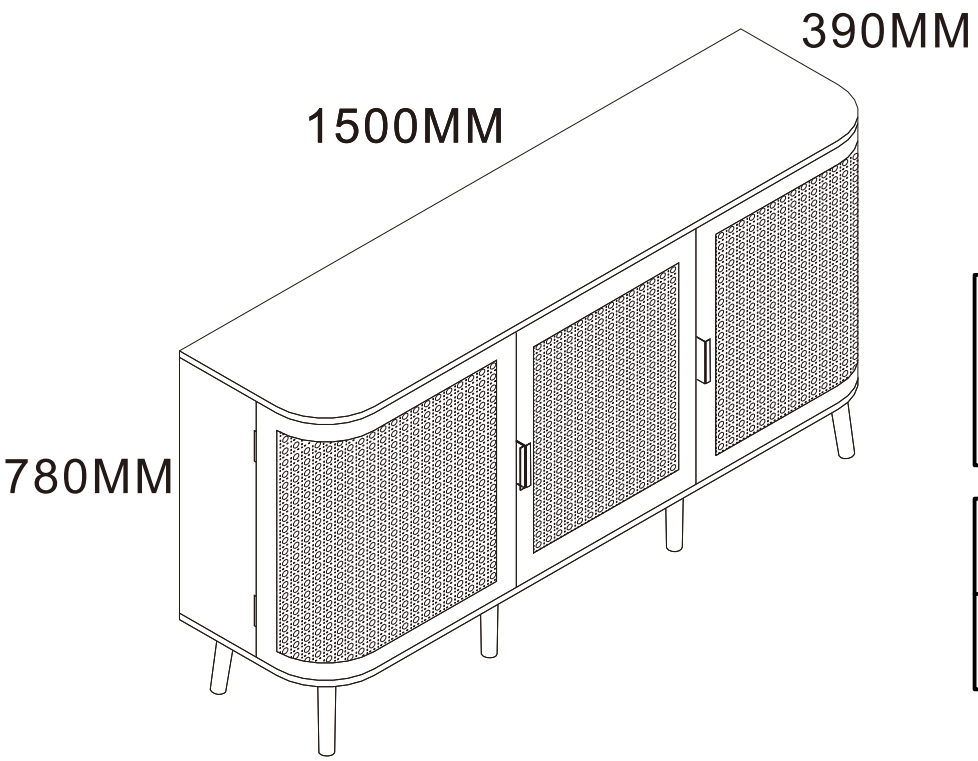

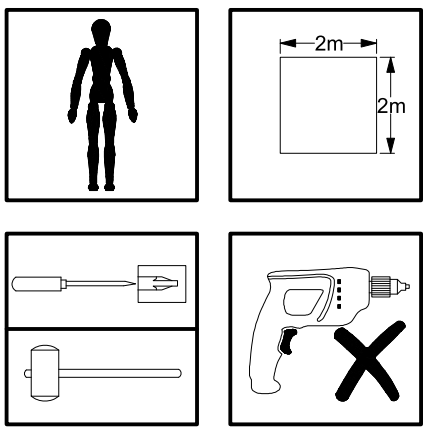

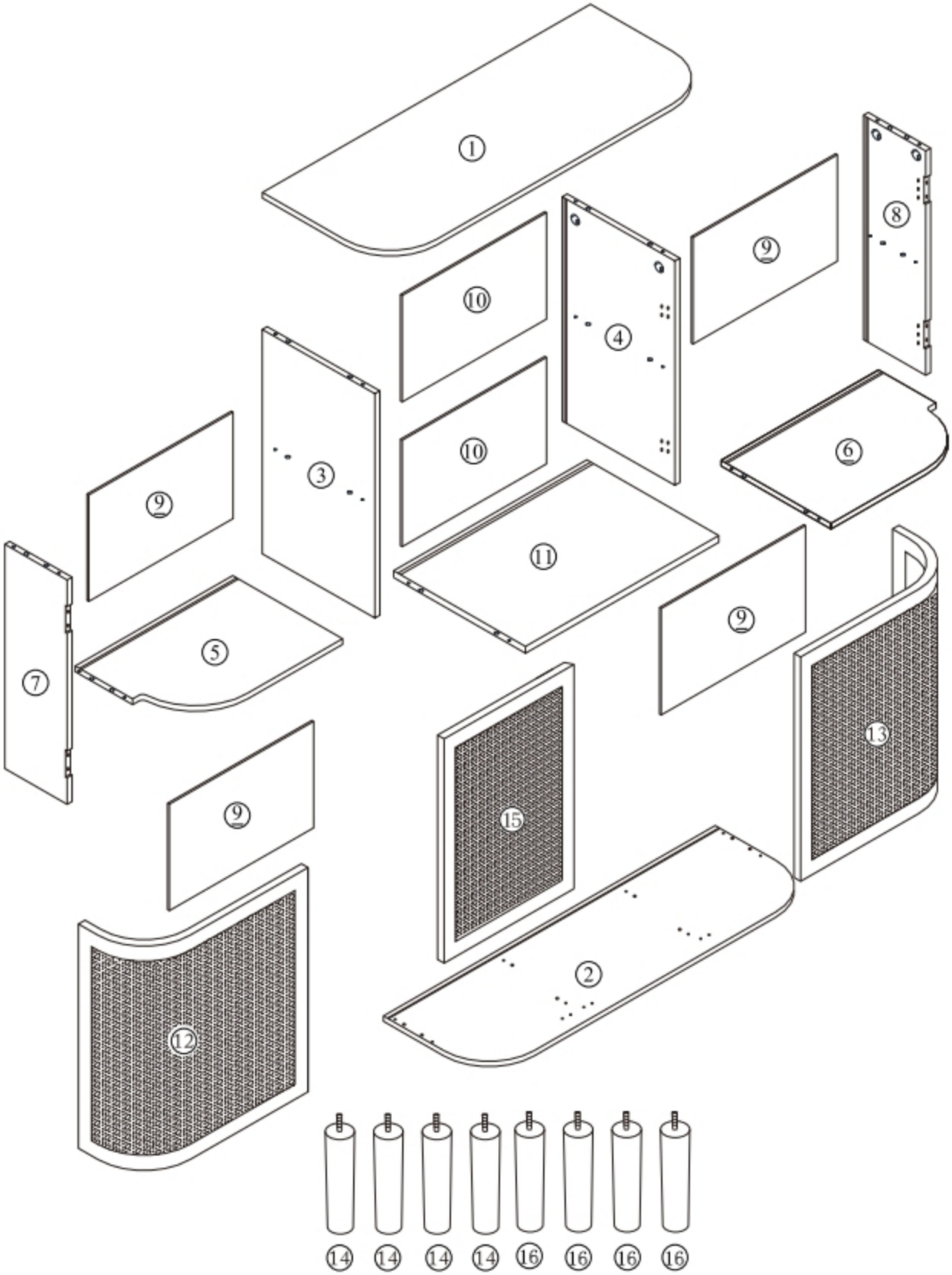
①
⑧
⑨
⑩
④
⑩
③
⑨
⑥
⑪
⑨
⑤
⑦
⑬
⑨
⑮
②
⑫
⑭ ⑭ ⑭ ⑭ ⑯ ⑯ ⑯ ⑯

Parts list				Parts list			
Part	Descripion	Box	Qty	Part	Descripion		Qty
1	Cabinet Top	1	1	A	Cam Bolt M6X35MM		20
2	Bottom Panel	1	1	B	Cam Lock 15X10MM		20
3	Middle Left Division Panel	1	1	C	Wooden Dowel M6X30MM		28
4	Middle Right Division Panel	1	1	D	Screw M4X35MM		10
5	Left Shelf	1	1	E	Screw M3X14MM		92
6	Right Shelf	1	1	F	Screw M3.5X14MM		6
7	Left Side Panel	1	1	G	Plastic Corner Support		24
8	Right Side Panel	1	1	H	Handle		3
9	Side Back Panel	1	4	I	Hinge		2
10	Middle Back Panel	1	2	J	Nylon Strap		2
11	Middle Shelf	1	1	K	Anchor		2
12	Left Door	1	1	L	Metal Pin		4
13	Right Door	1	4	M	Screw M4X12MM		22
14	Feet	1	4	N	Magnetic Door Catcher		6
15	Middle Door	1	1	O	Door Metal Plate		6
16	Center Adjustable Foot	1	4	P	Hinge		4

**** You will need a small mallet and a screwdriver for assembly.**
**** Some screws and wooden dowel may remain.**

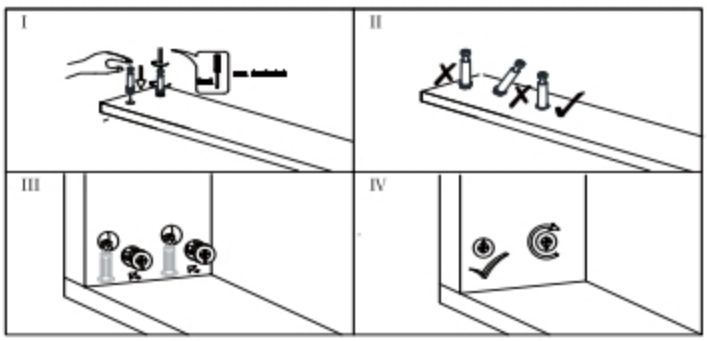

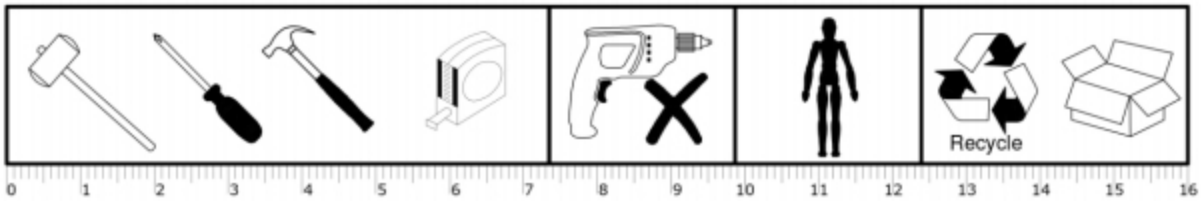

Step1

Vendor:S000403

A×4

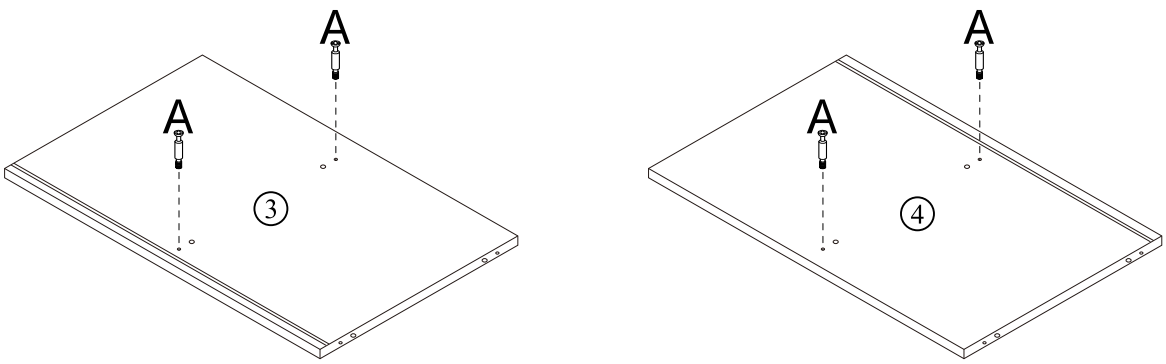

Step 2

B×4

C×4

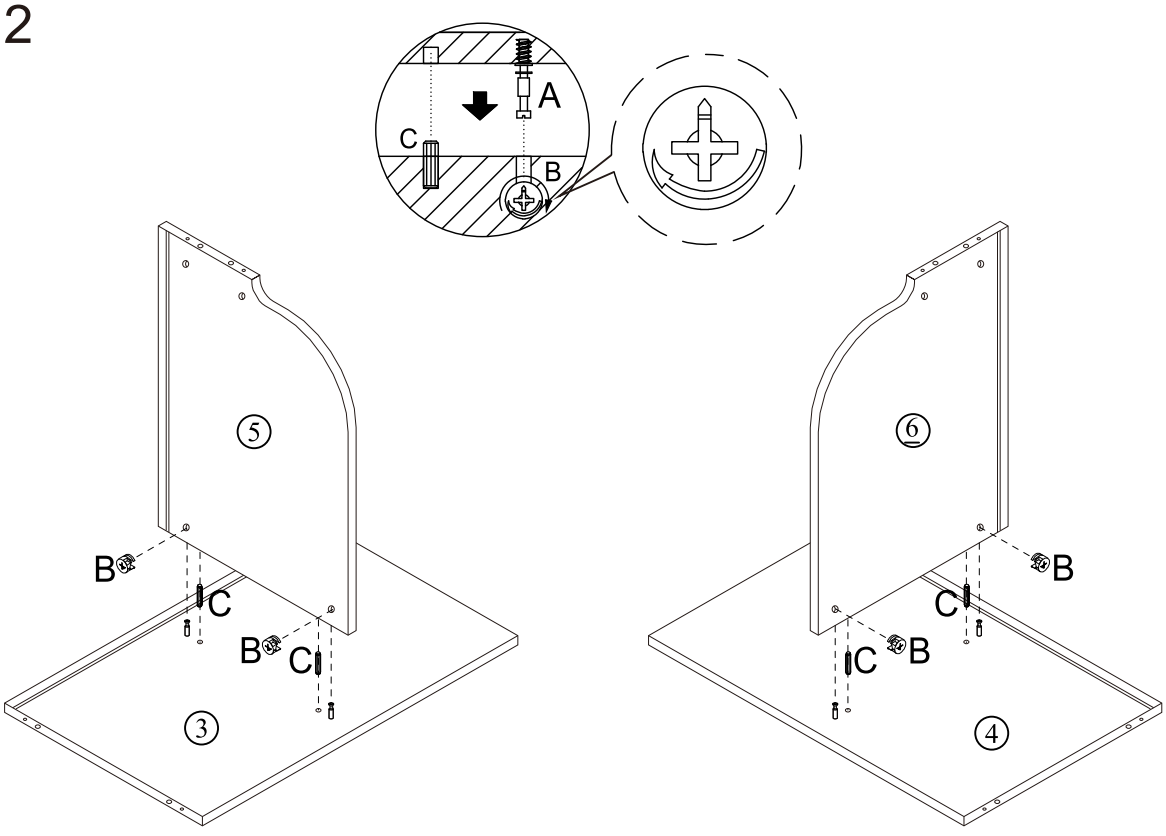

Step 3

Vendor:S000403

A×8

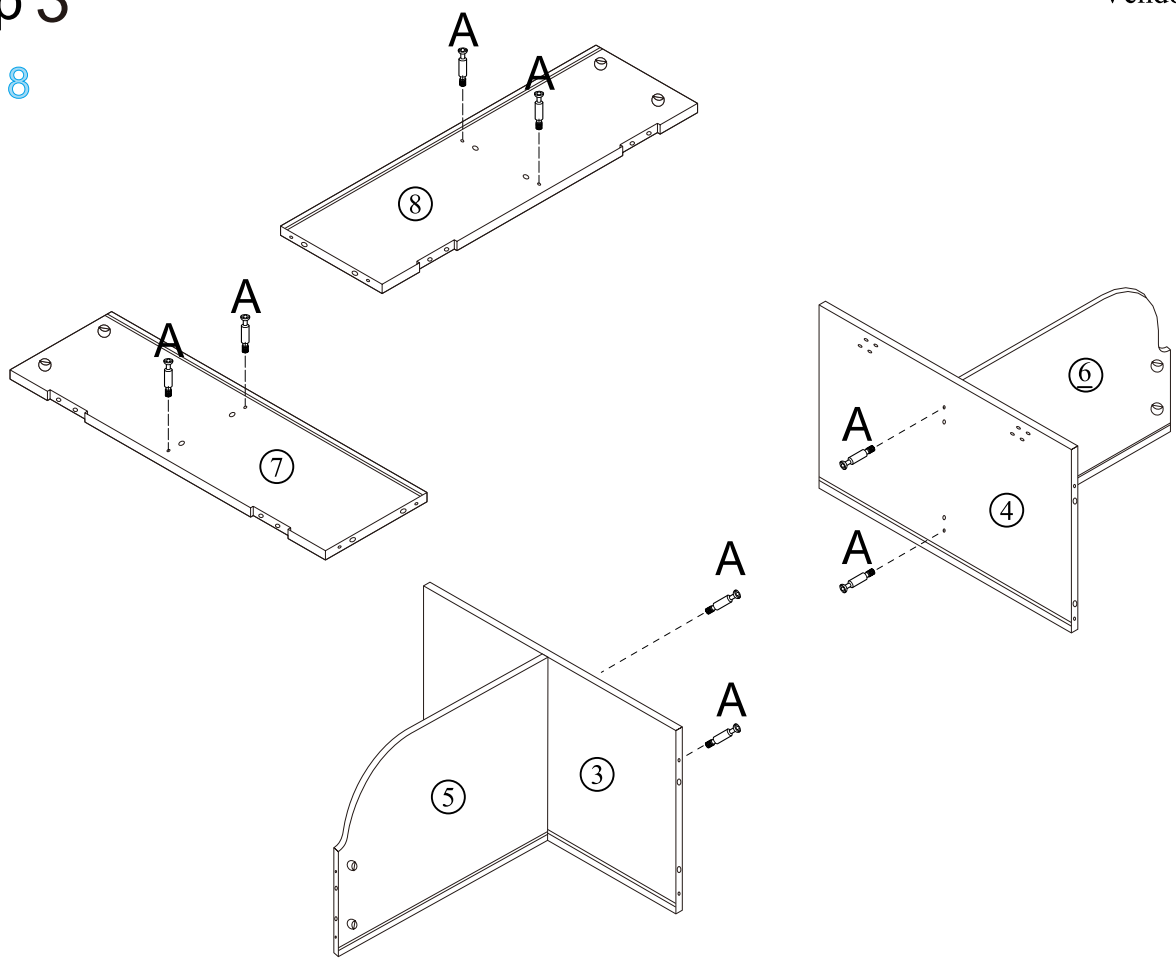

Step 4

B×8

C×8

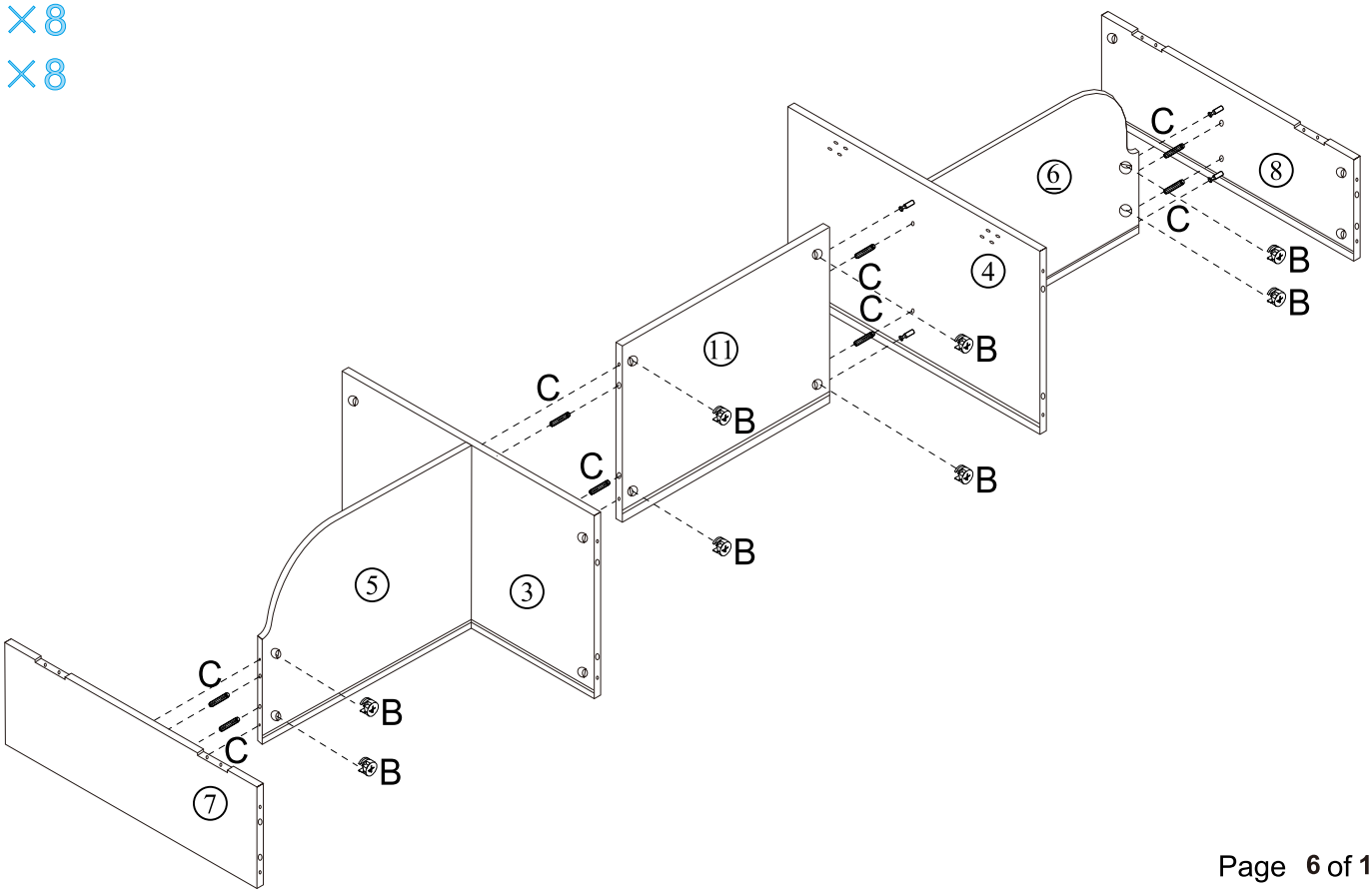

Step 5

Vendor:S000403

A×8
E×6
N×3

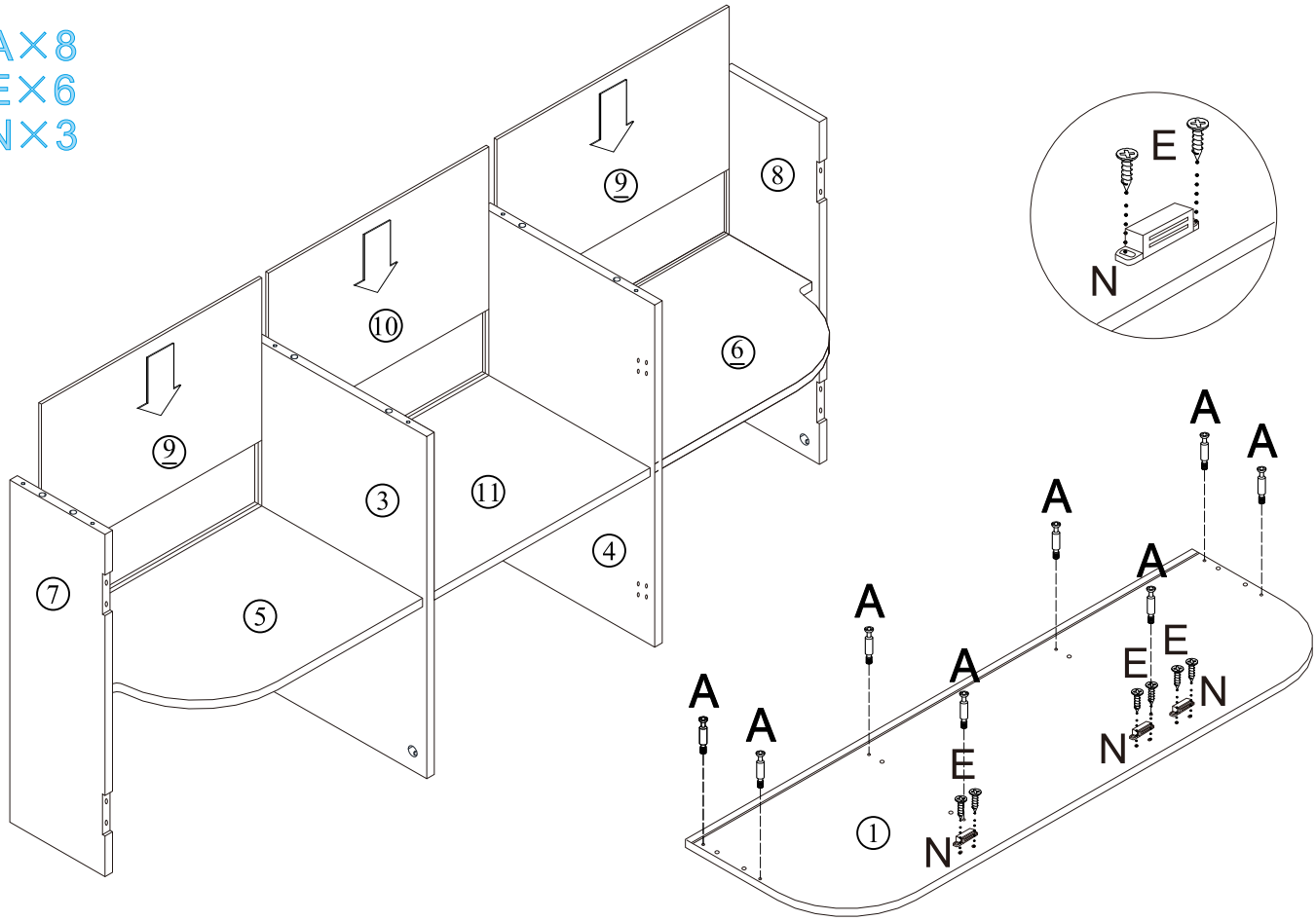

Step 6

B×8
C×8

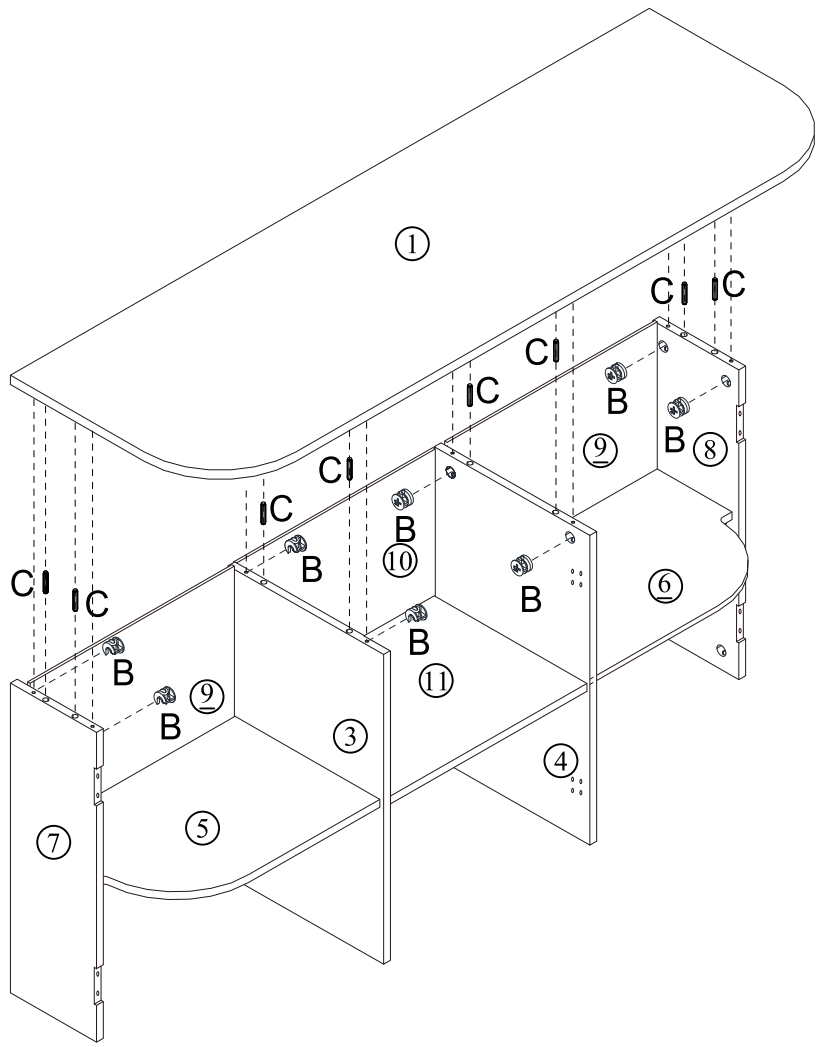

Step 7

Vendor:S000403

E×6
N×3

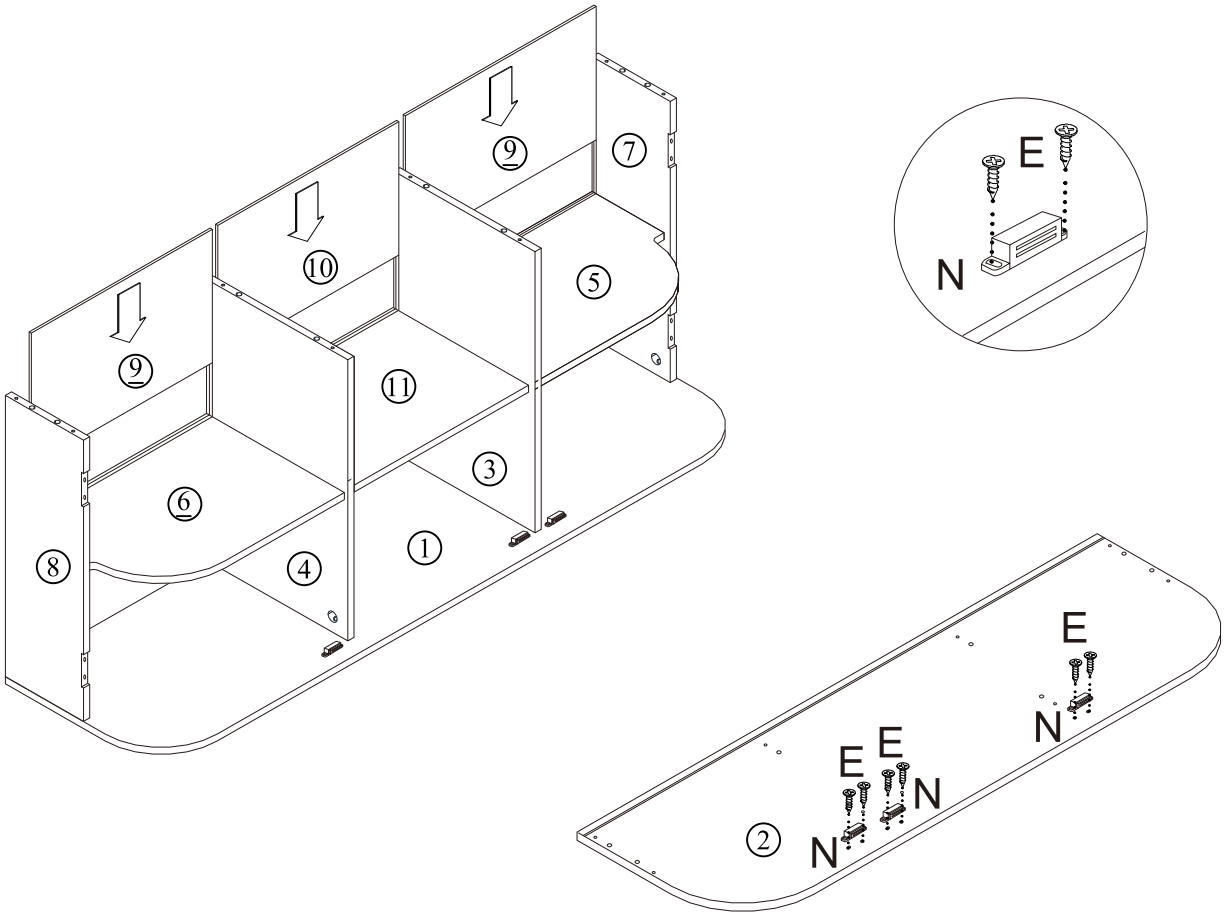

Step 8

C×8
D×8

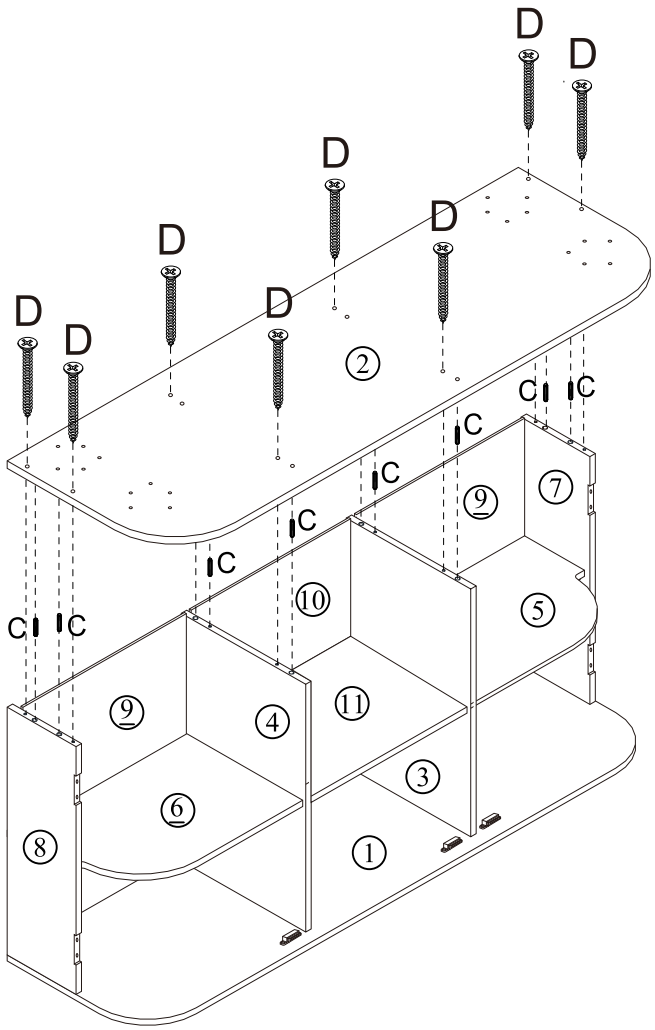

Step 9

L×4
M×20

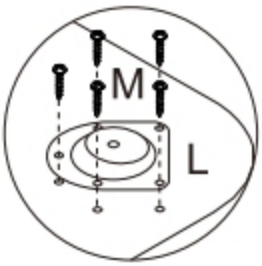

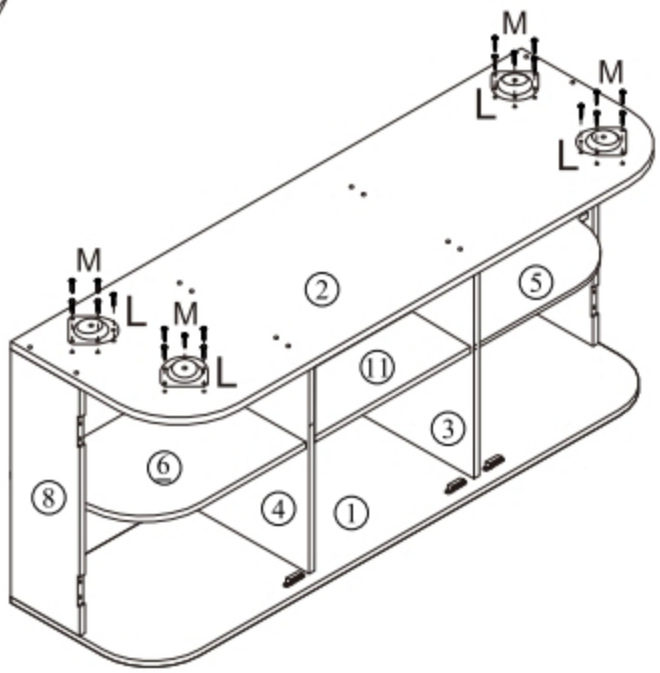

Step 10

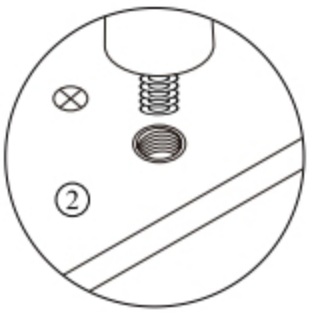

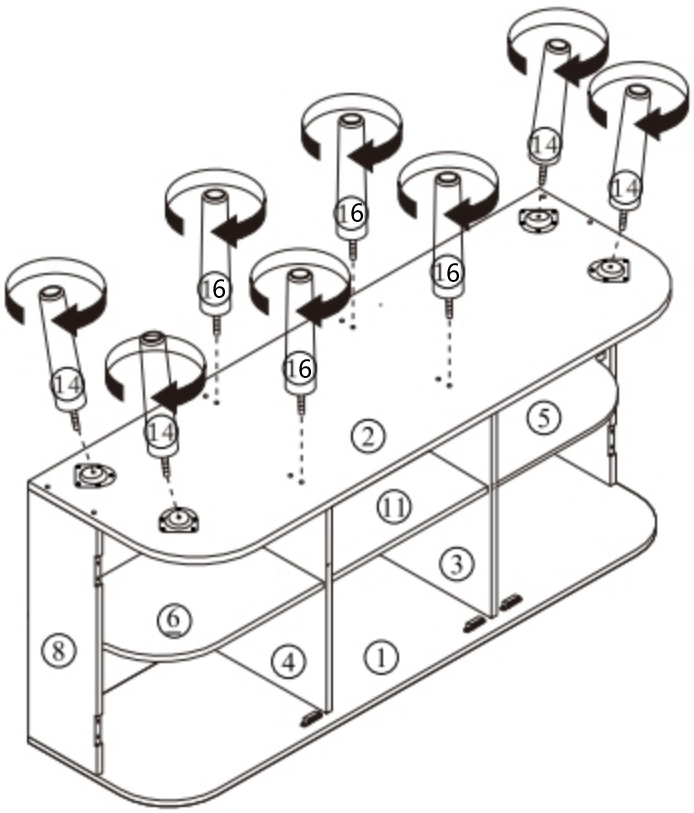

Step 11

Vendor:S000403

E×20
F×4
H×2
O×4
P×4

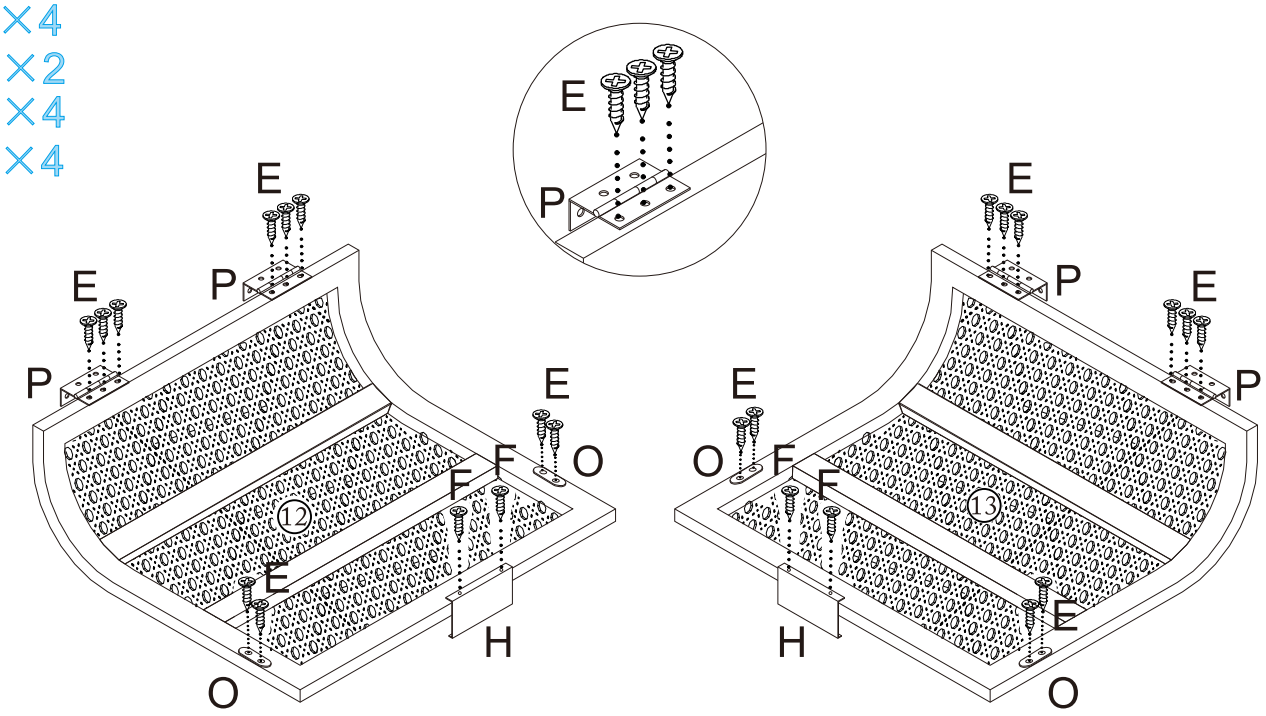

Step 12

E×20

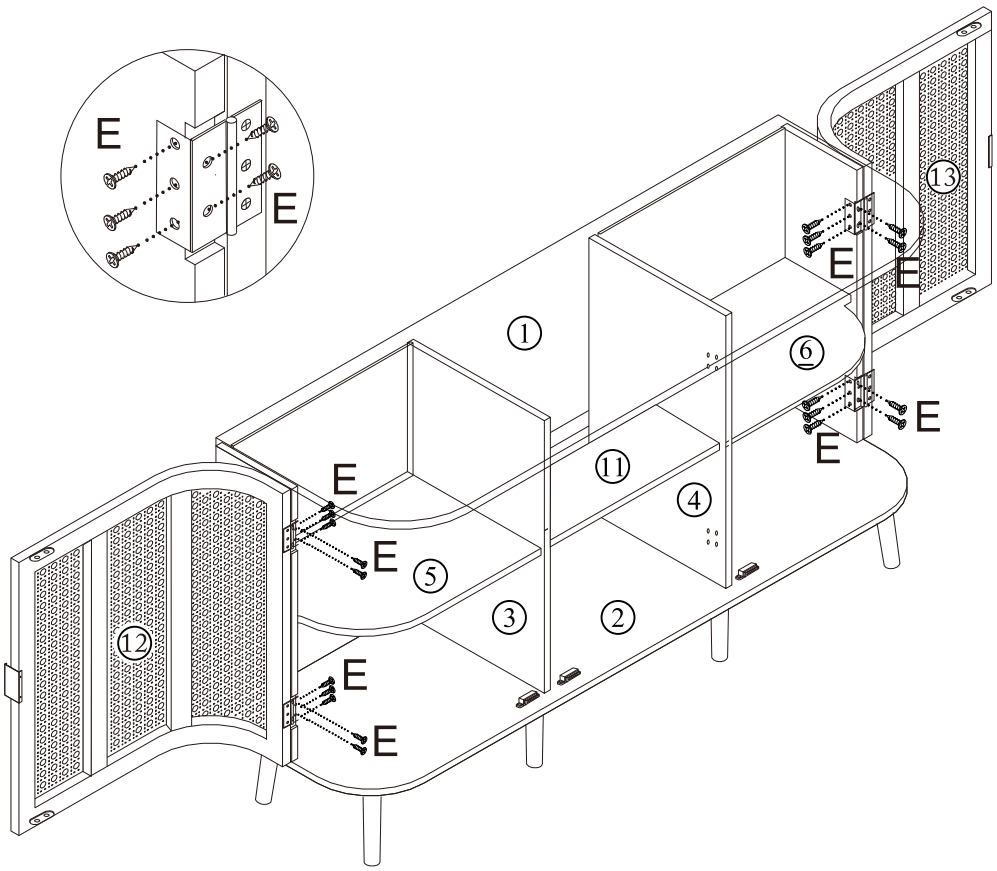

Step 13

Vendor:S000403

E×8
F×2
H×1
I×2
O×2

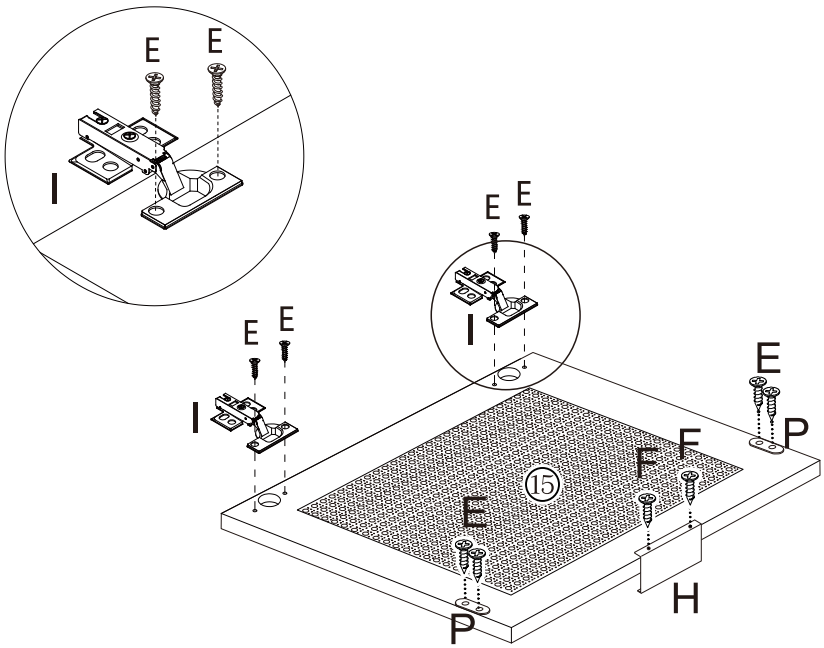

Step 14

E×8

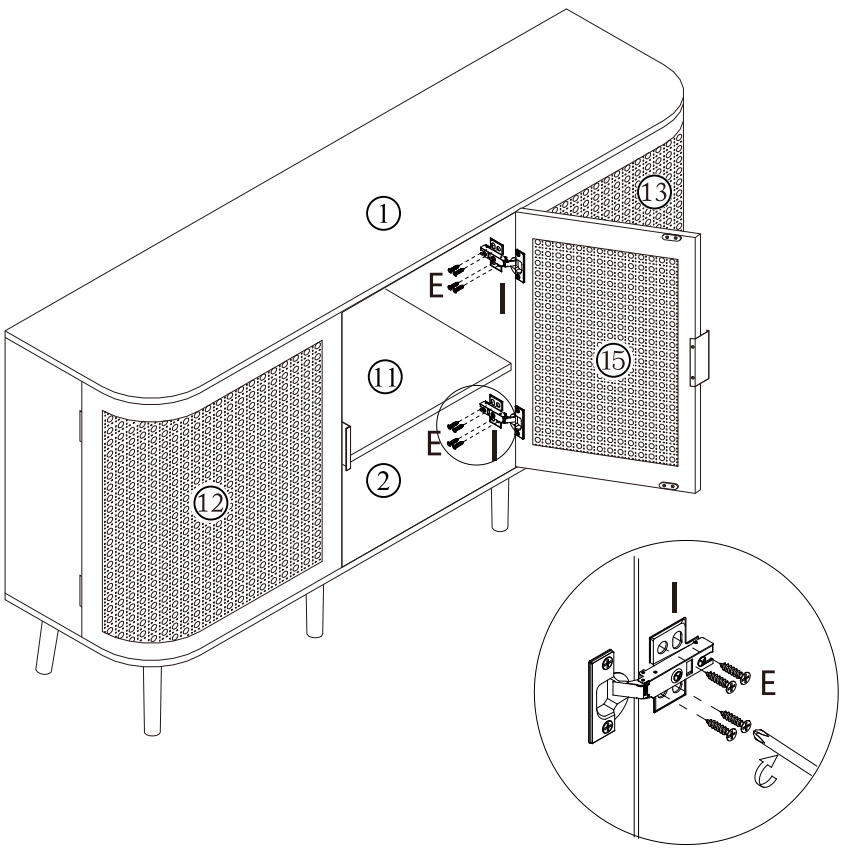

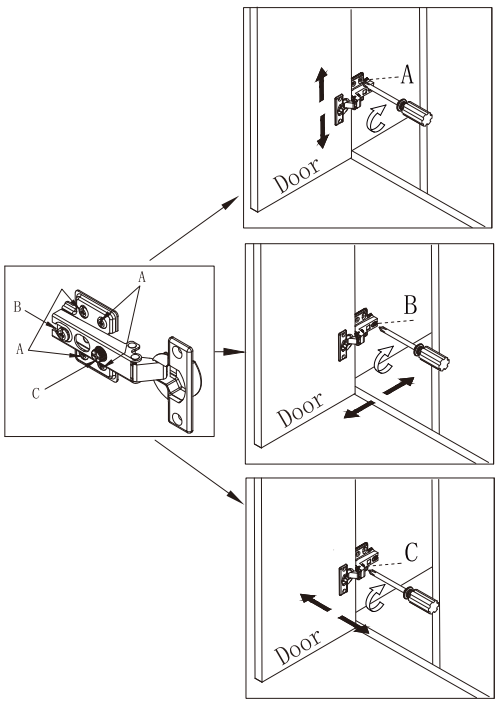

Is your cabinet door looking crooked or unevenly spaced? (Cont.)

If you're still having trouble lining everything up, your next step should be to try to adjust the feet slightly to square up the cabinet & doors. Follow the illustrations below:

If the right door appears to be hanging low, you can adjust the adjustable leveler on the front right until the door is better aligned.

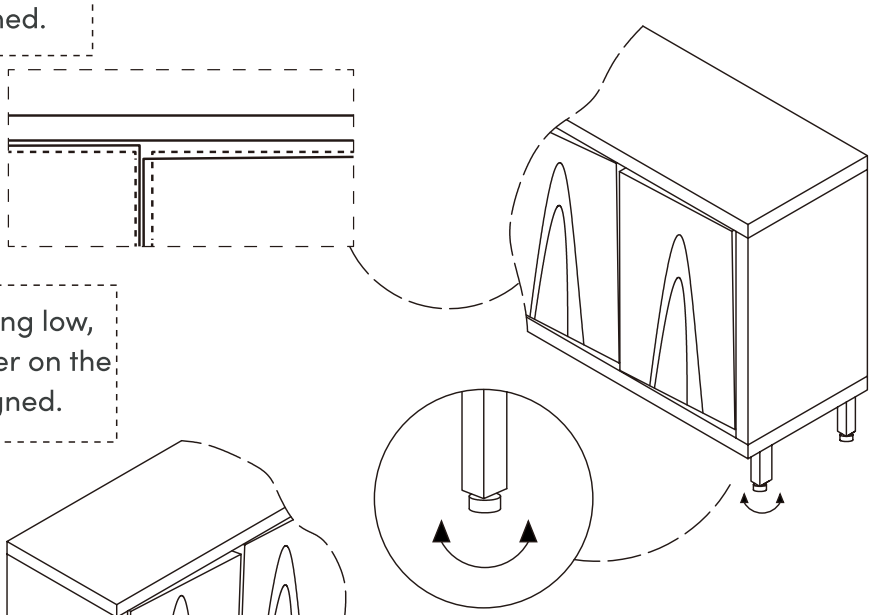

If the left door appears to be hanging low, you can adjust the adjustable leveler on the front left until the door is better aligned.

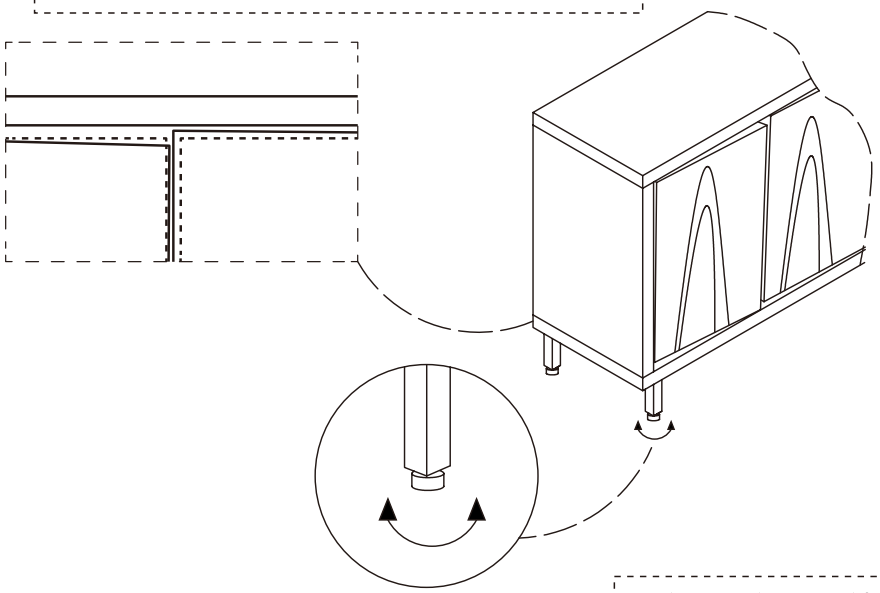

Adjust the midfoot as needed to level the object

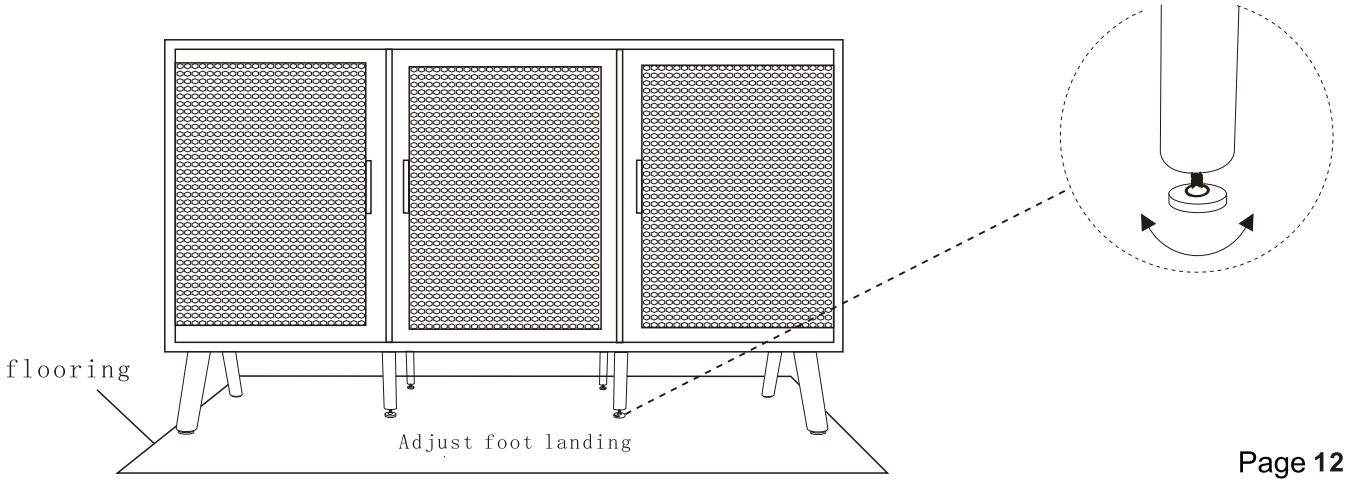

Step 15

E×24
G×24
J×2
M×2

Vendor:S000403

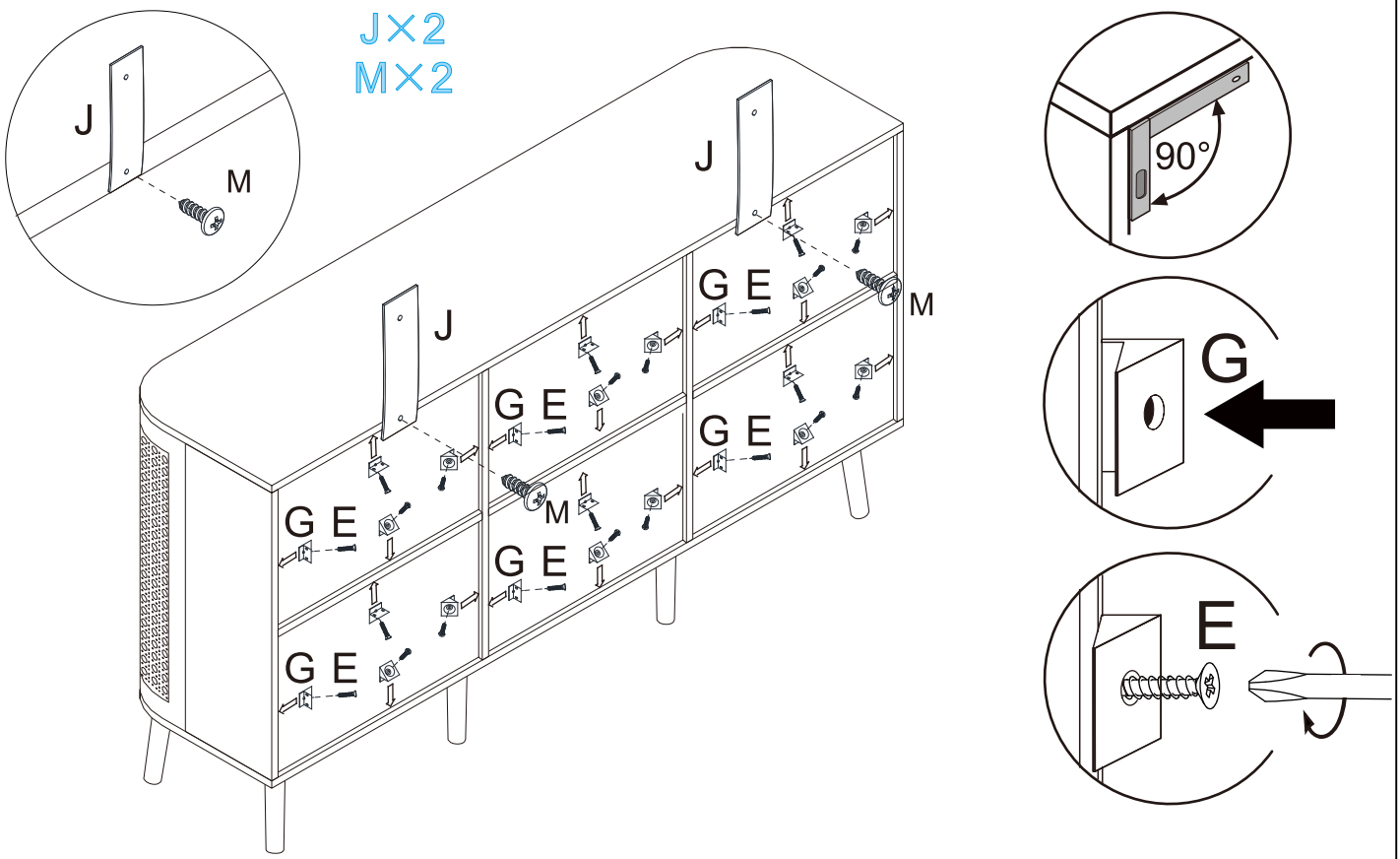

Step 16

D×2
K×2

