Assembly Instructions

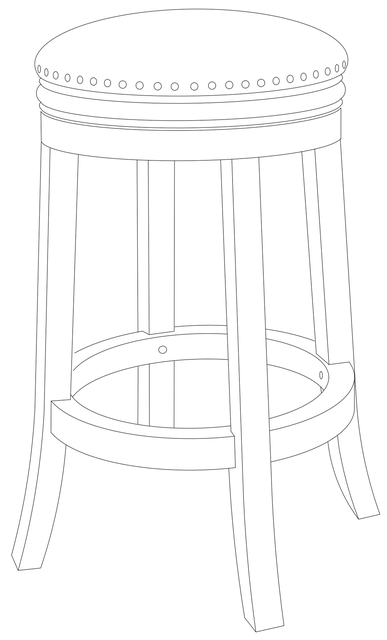

READ & SAVE THESE INSTRUCTIONS:
Please read instructions carefully and identify all parts before assembly

- Assemble your unit in area free from any objects that might scratch the surface of your unit
- Examine all packing materials before discarding, shortages may occur from parts left in the packing material
- Follow step by step instruction

PART LIST:

A	Chair Leg	4 PCS
B	Footrest	1 PC
C	Apron	1 PC
D	Cushion with Apron	1 SET

HARDWARE LIST:

1	JCBC Screw M6 x 25mm	4 PCS
2	JCBC Screw M6 x 40mm	4 PCS
3	JCBC Screw M6 x 45mm	4 PCS
4	Spring Washer M6 x 13mm	8 PCS
5	Flat Washer M6 x 16.5mm	8 PCS
6	Allen Key M4 x 110mm	1 PC

A

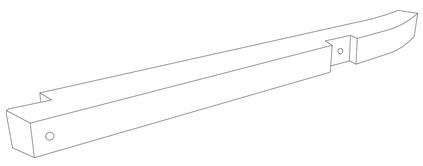

B

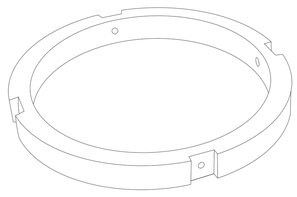

C

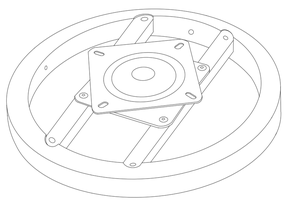

D

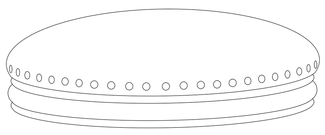

IMPORTANT NOTE:

- Place all wooden parts on a clean and smooth surface such as a rug or carpet to avoid the ports from being scratched. Check to be sure that you have all parts and hardware. Remove all wrapping materials, including staples & packing straps before you start to assemble. Do not tighten all screws/bolts until all completely assembled.
- Keep all hardware parts out of reach of children.
- **DO NOT TIGHTEN BOLTS/SCREWS UNTIL ALL COMPLETELY ASSEMBLED.**

Assembly Instructions

STEP 1

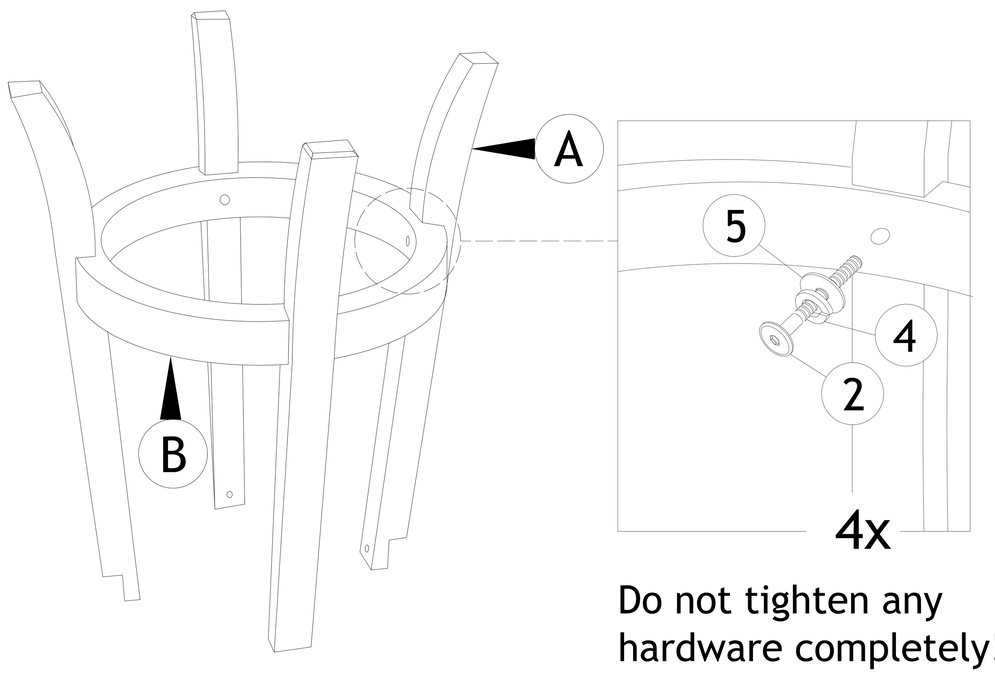

Do not tighten any hardware completely!

STEP 2

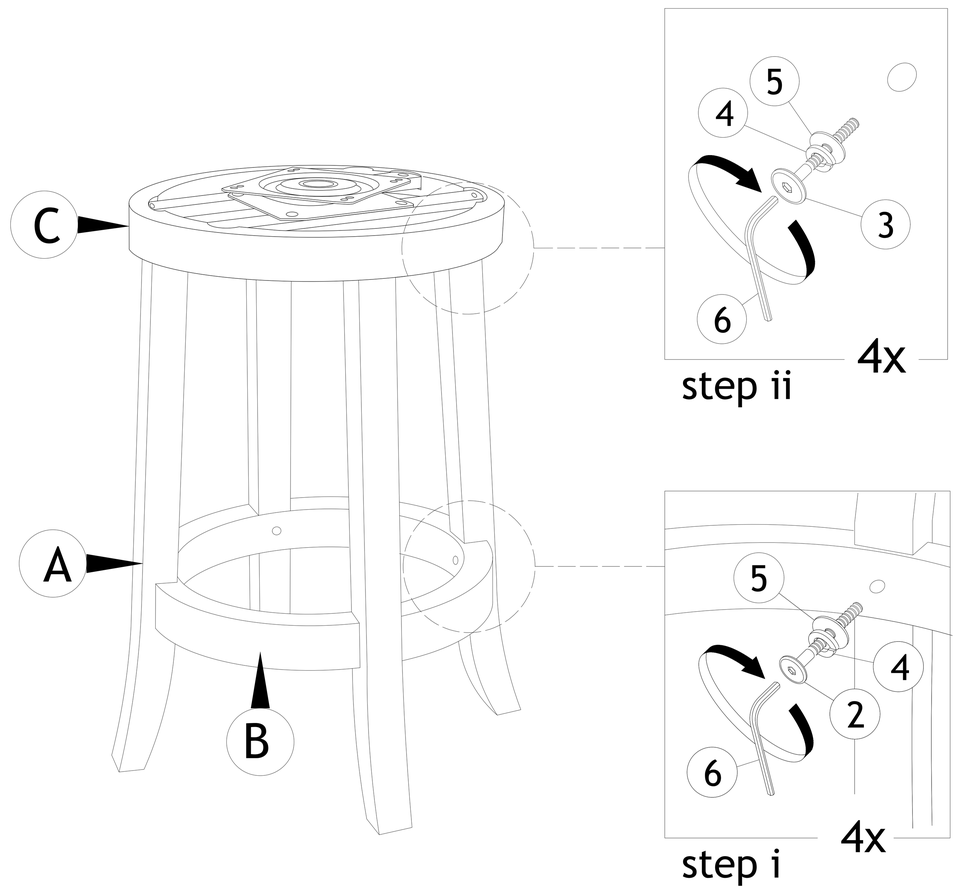

Attach part(A) with part(C). Tighten part(A) with part(B) first, then tighten part(A) with part(C) completely.

STEP 3

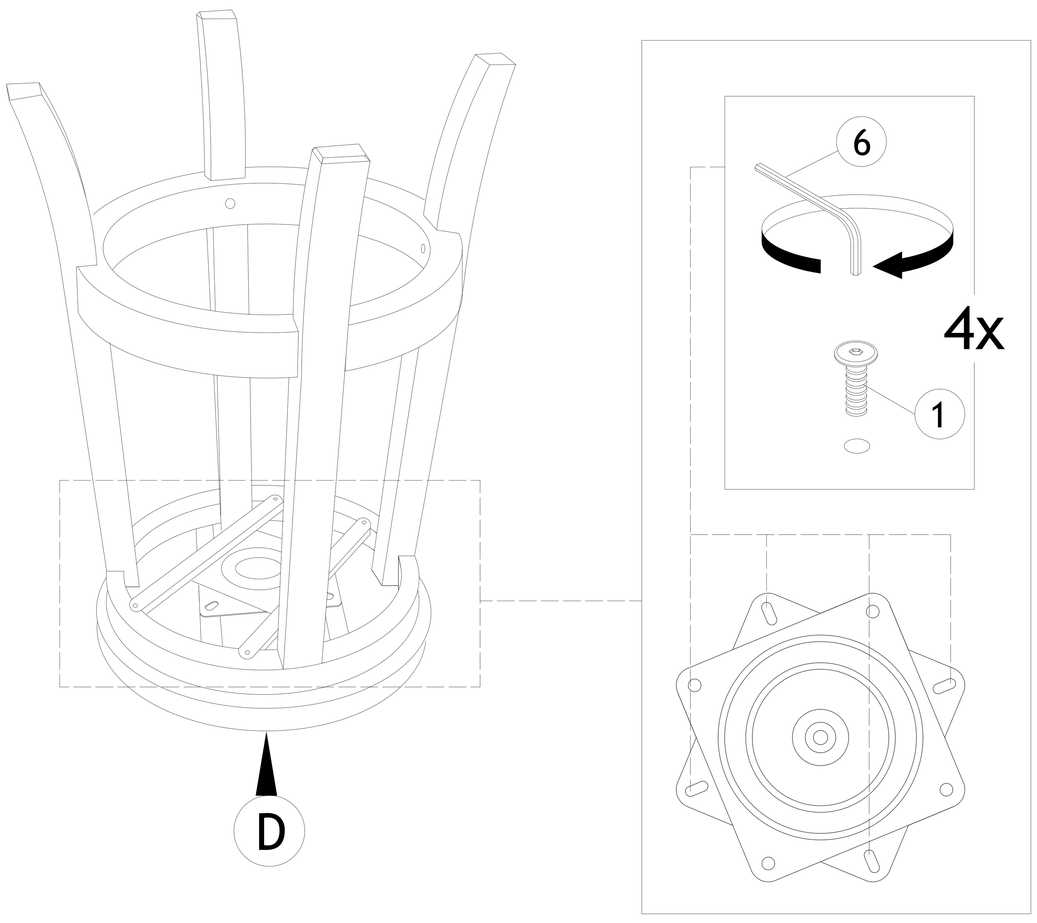

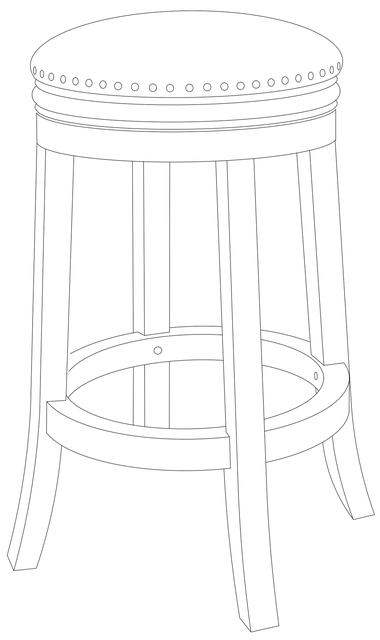

COMPLETE ASSEMBLY

CARE AND MAINTENANCE

- The touch of a soft cloth is all the maintenance your wood pieces will ever need. Never use harsh chemicals or abrasive cleaners, as they could mark or destroy finish.
- Bolts, screws, and nuts may loosen during everyday use. They should be periodically inspected and re-tightened. Always visually check that all hardware on the list is attached and kept tightened.