ZEAFiVE®

PRODUCT INSTRUCTION VIDEO

SIZE DETAILS

ACRYLIC SHOWER BASE

MODEL No.ZSB-6030-L

All dimensions are nominal, minor variations may occur.

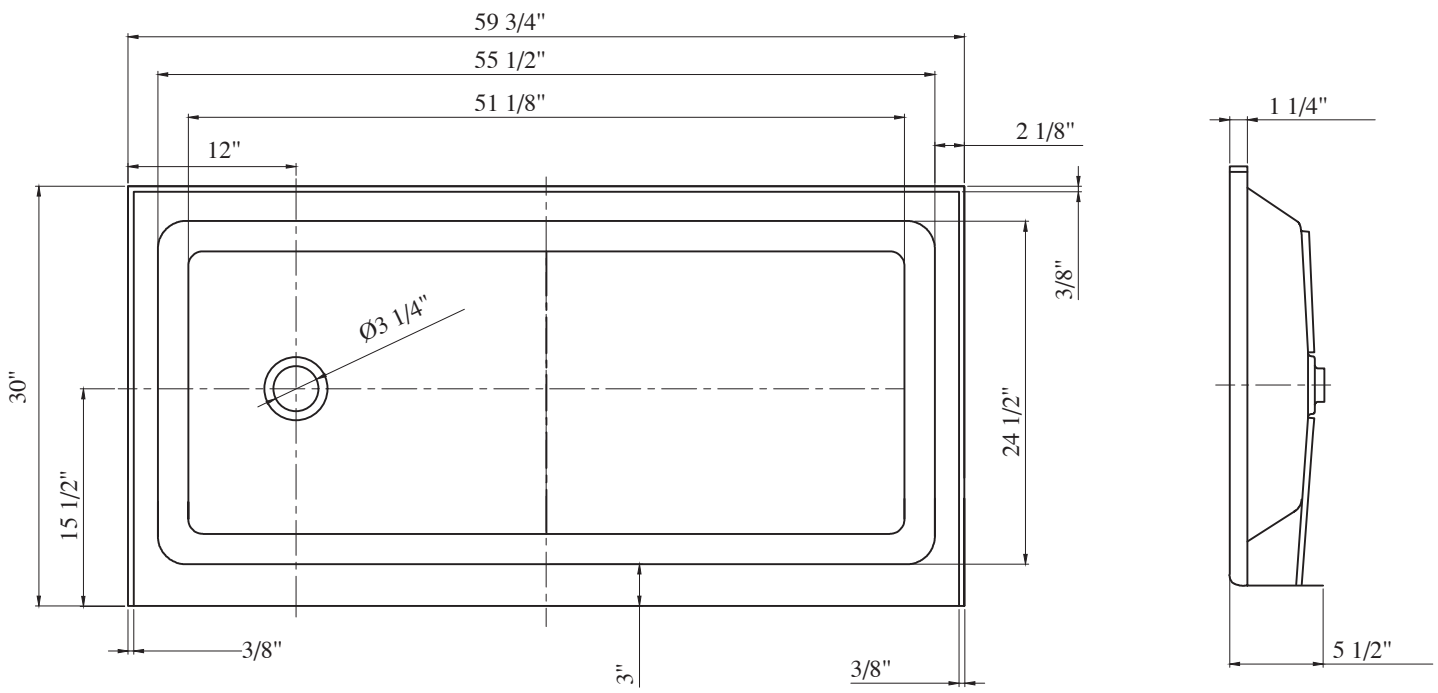

Email: service@bestgosupplychaininc.com