TEAR SHEET

Menona 29" Table Lamp

Item # CHA 8609IND-L

Designer: Chapman & Myers



Height: 29"

Width: 19"

Base: 6.75" Round

Finishes: CHT, IND, MLA

Shade Treatments: L

Shade Details: 12" x 19" x 13"

Socket: E26 Dimmer

Wattage: 15 LED A19

Weight: 23 Pounds

Note: 120V Configuration Only | Reactive Ceramic Glazes Will Vary ir Color and Texture

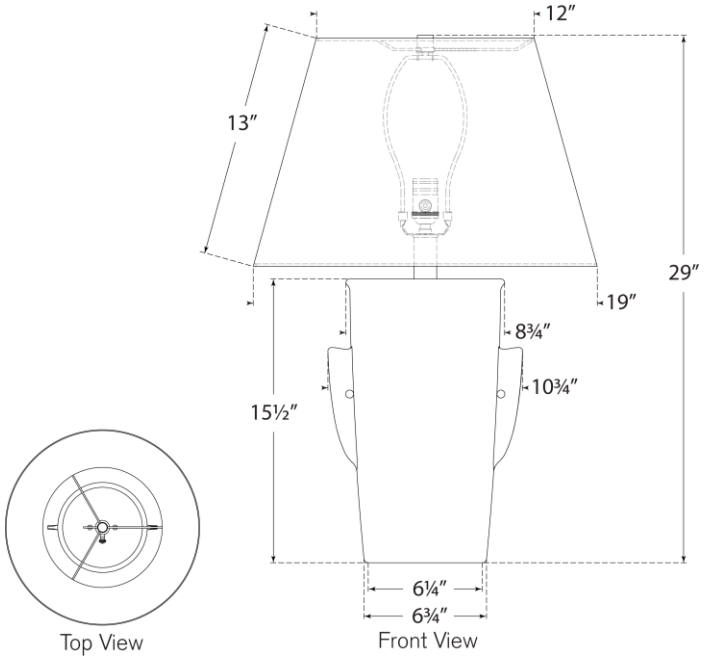

VISUAL COMFORT & CO.