91178 Product Installation Instructions

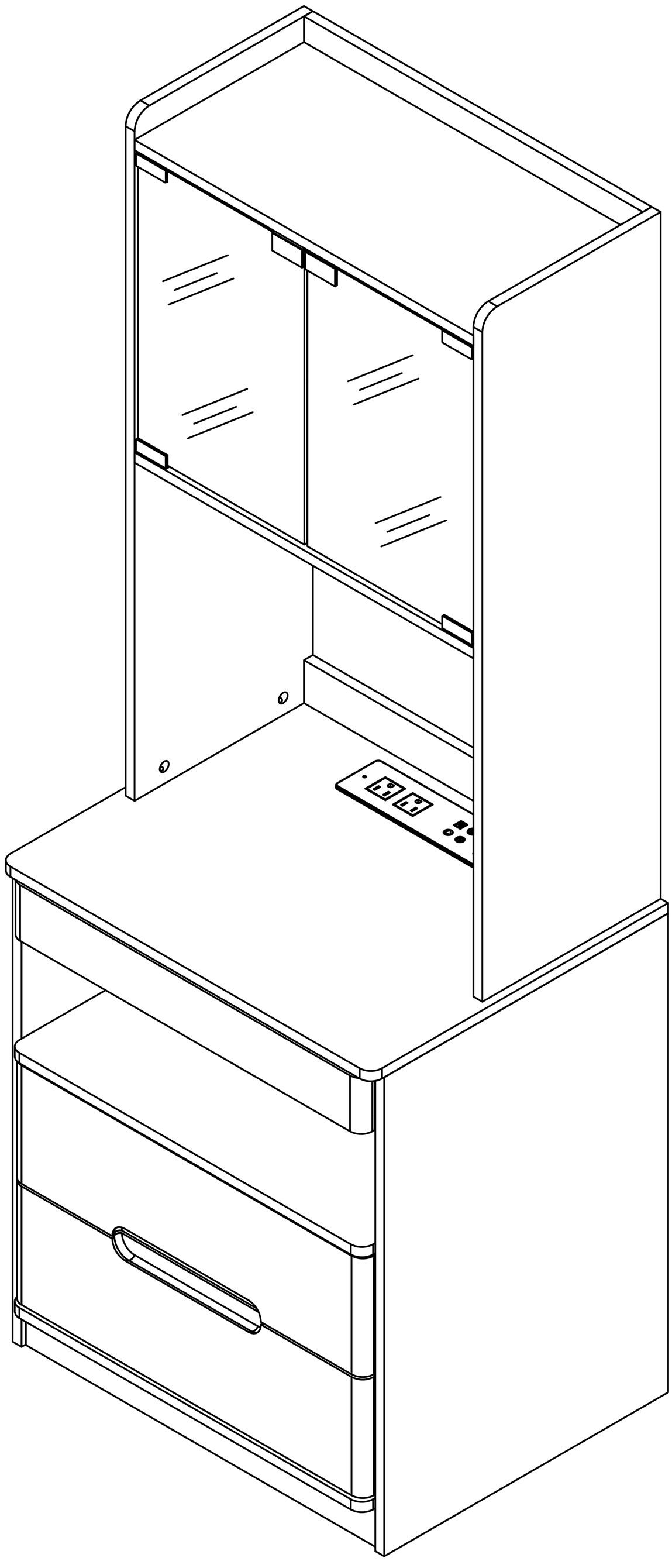

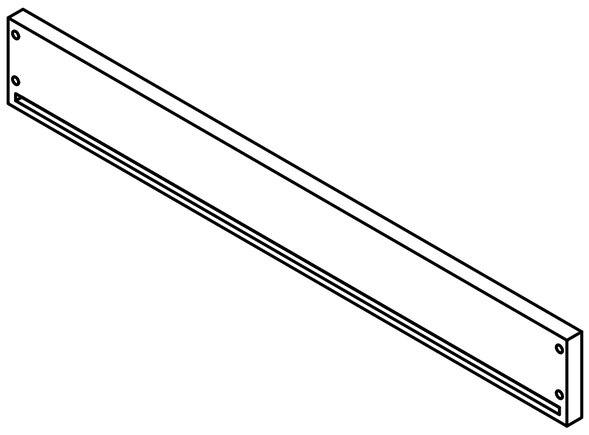

1x1

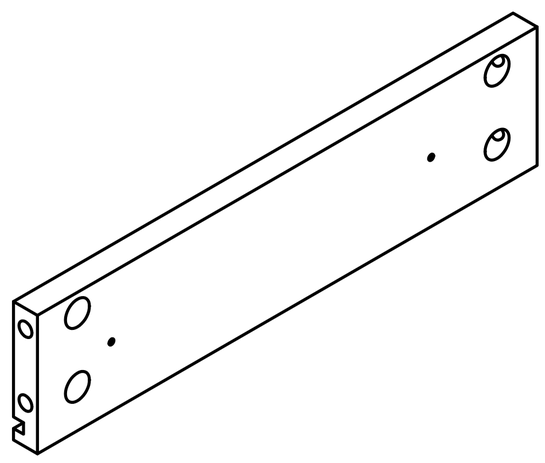

2x1

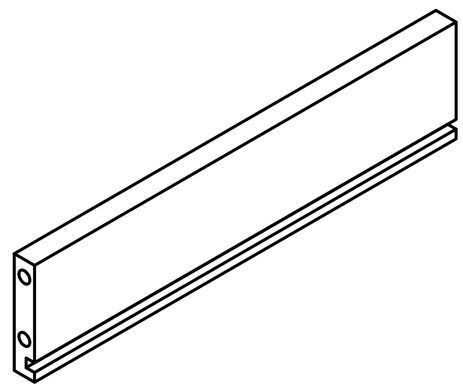

3x1

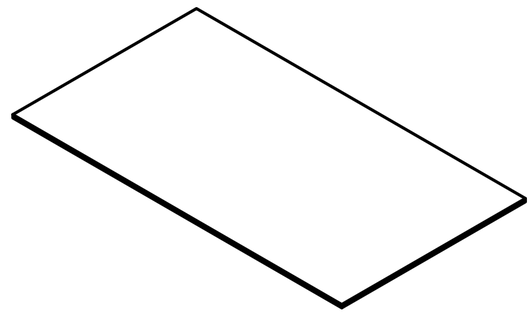

4x1

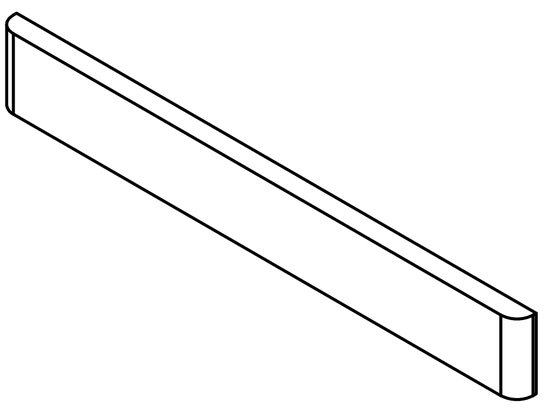

5x1

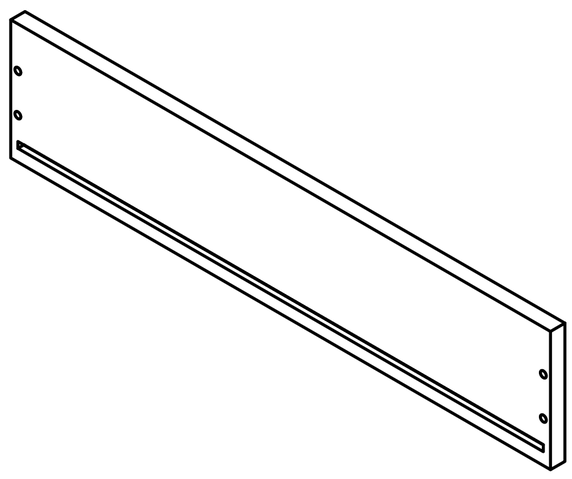

6x2

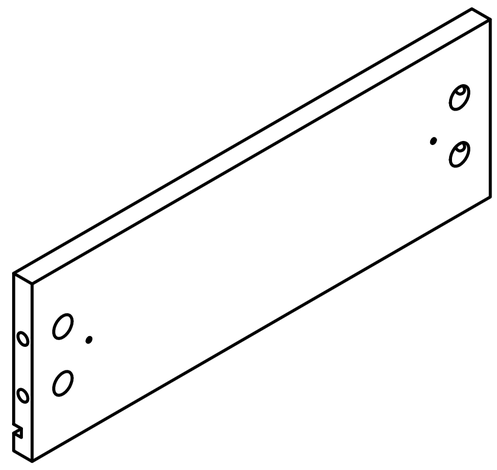

7x4

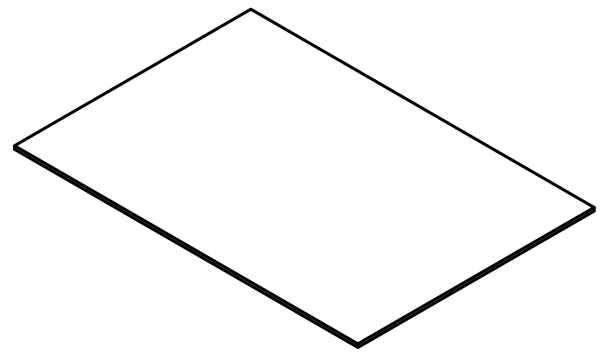

8x2

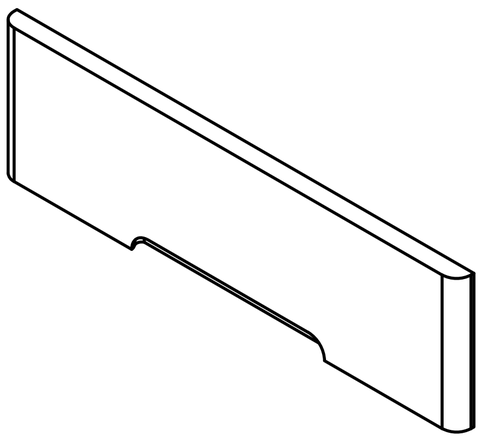

9x1

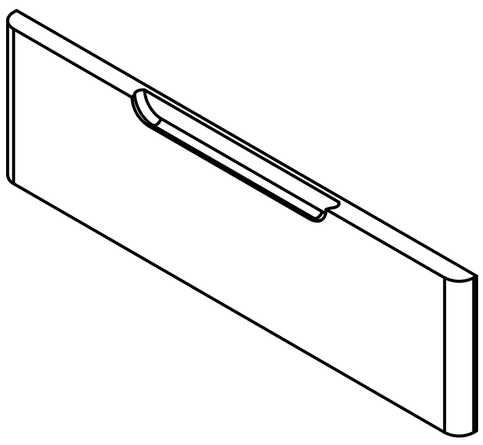

10x1

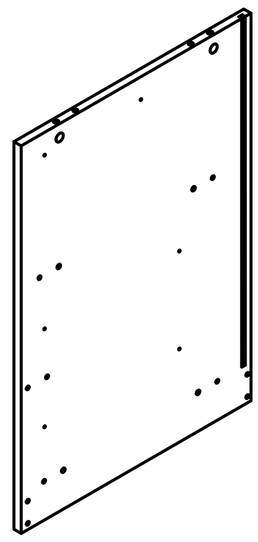

11x1

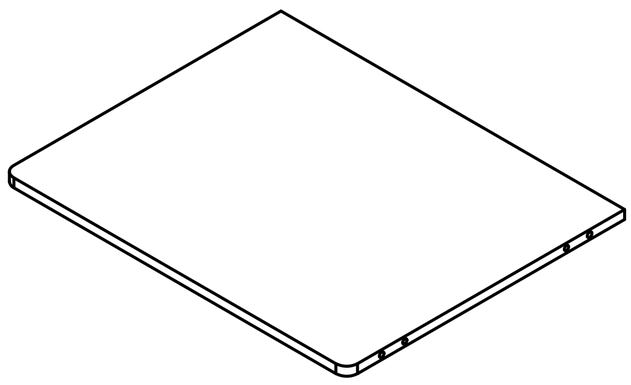

12x1

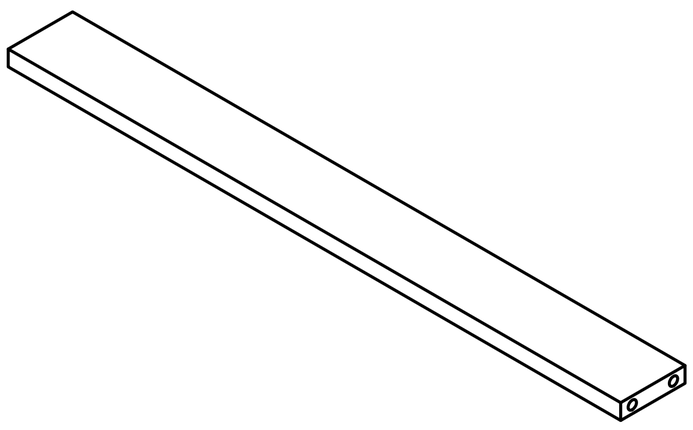

13x1

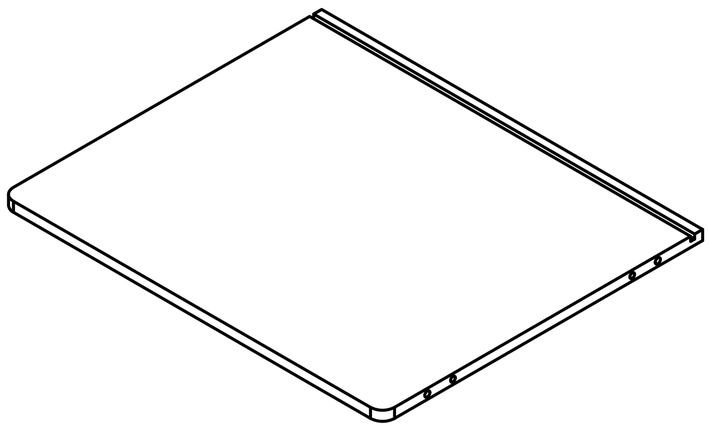

14x1

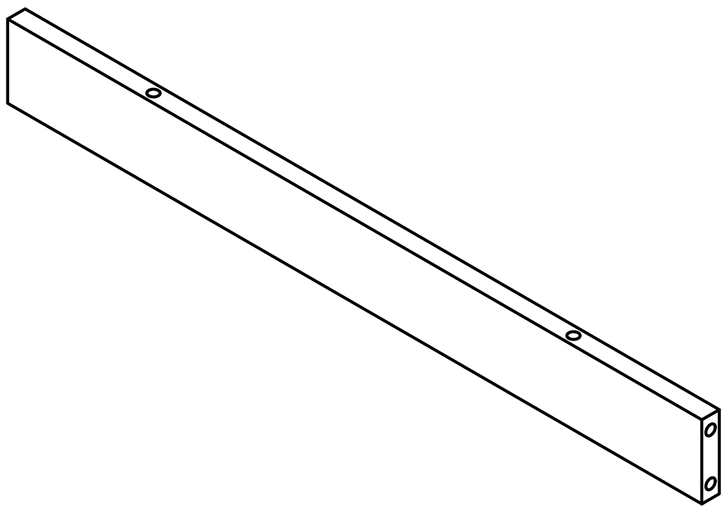

15x2

1

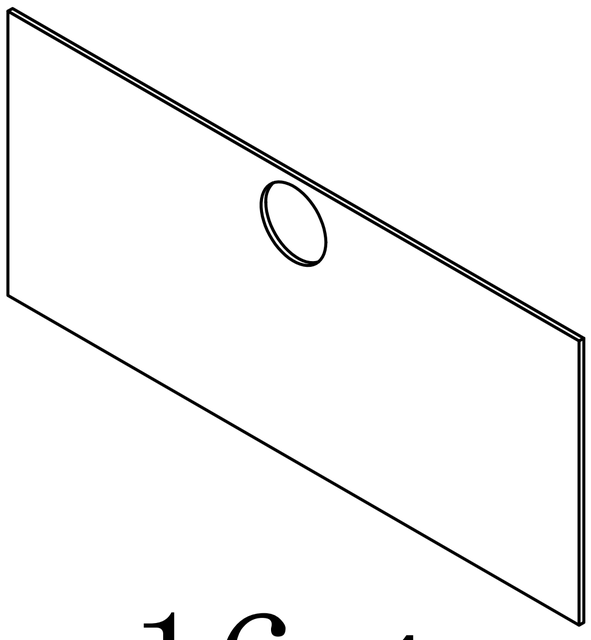

16x1

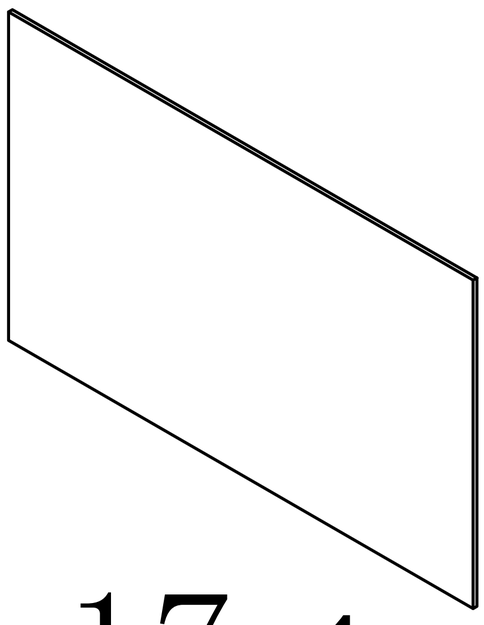

17x1

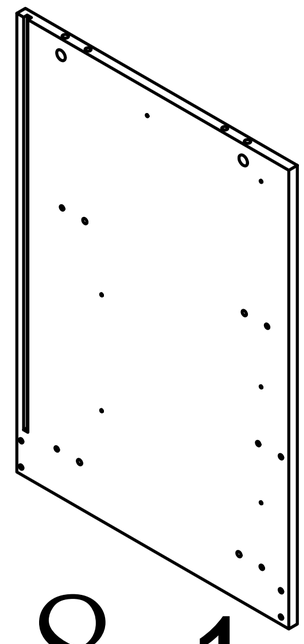

18x1

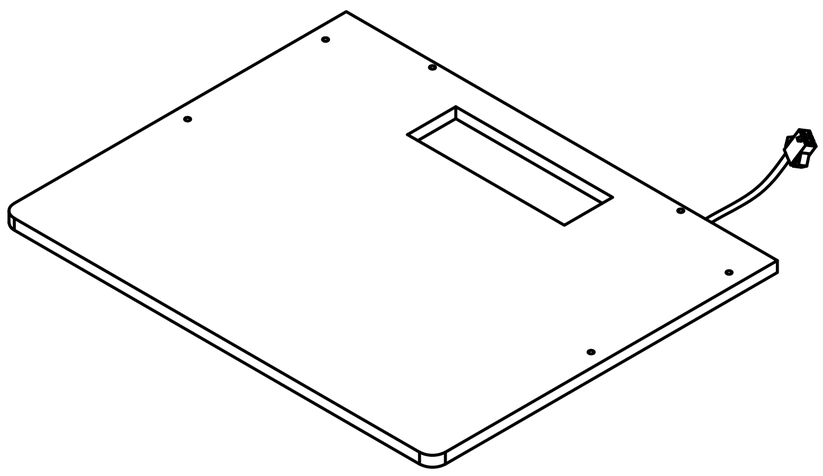

19x1

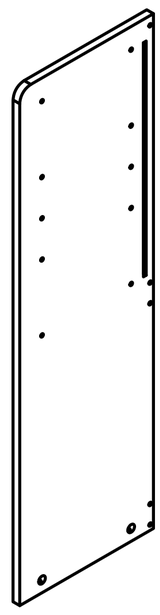

20x1

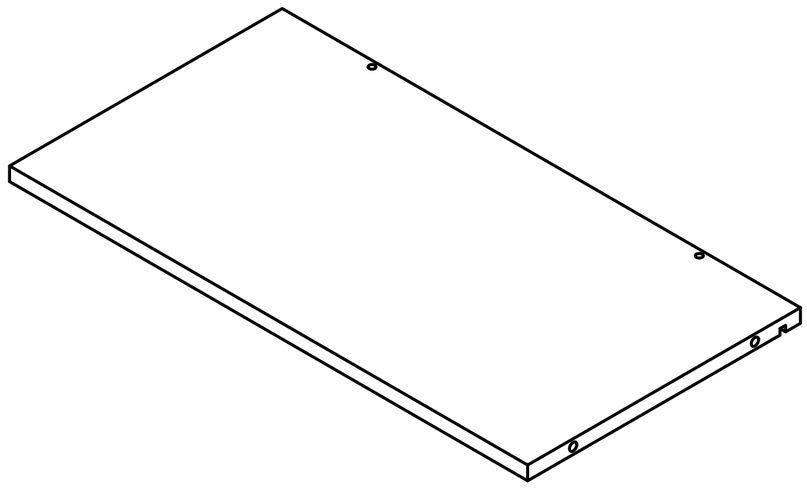

21x1

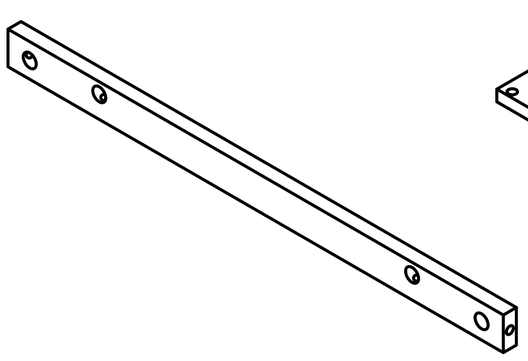

22x1

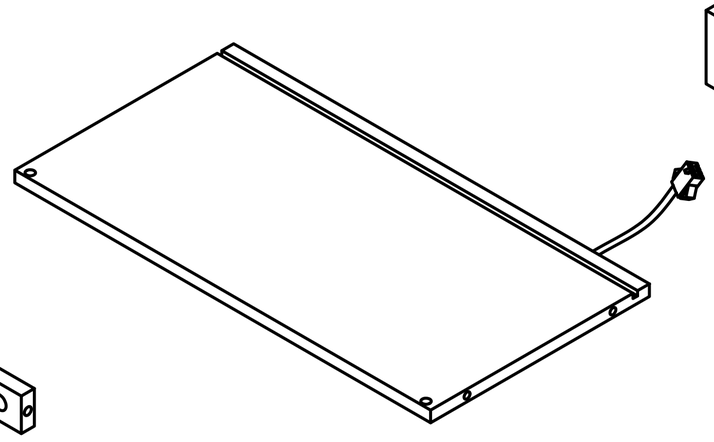

23x1

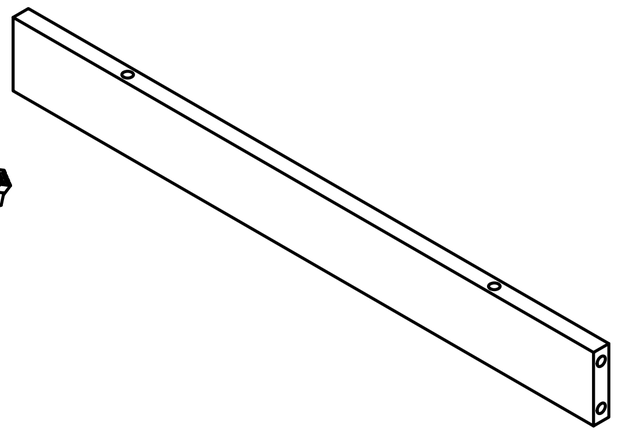

24x2

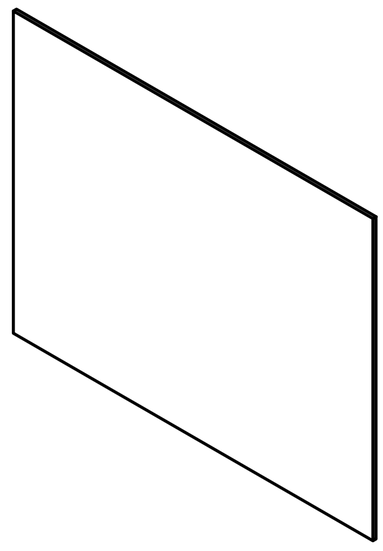

25x1

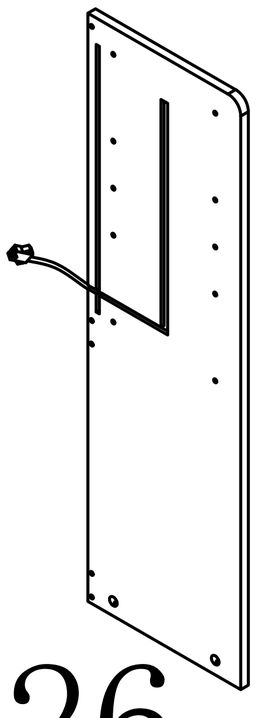

26x1

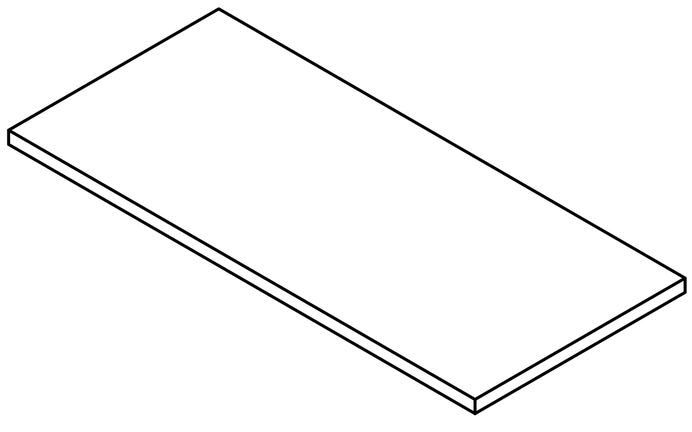

27x1

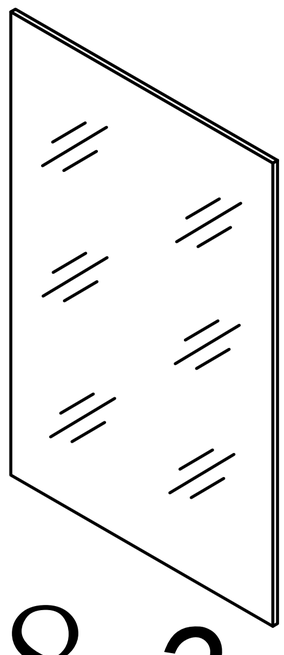

28x2

2

A	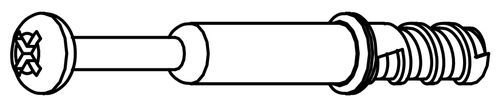	Two In One Screw (6x28mm)	80pcs +8pcs
B	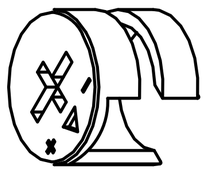	Two In One Nut (10x12mm)	80pcs +8pcs
C		Wood Chipping (6x30mm)	12pcs +2pcs
D	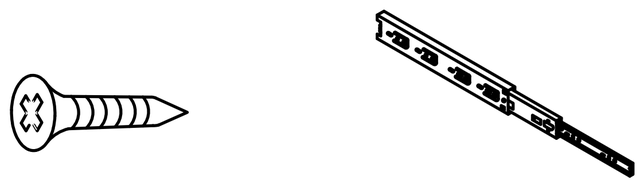	Screw & Guide (24cm) (3.5x12mm)	2pcs 10pcs +2pcs
E		Screw & Guide (29cm) (3.5x12mm)	4pcs 20pcs +4pcs
F	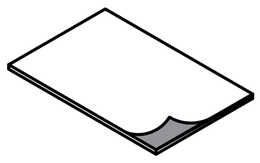	Non-slip pads (50x10mm)	4pcs +2pcs
G	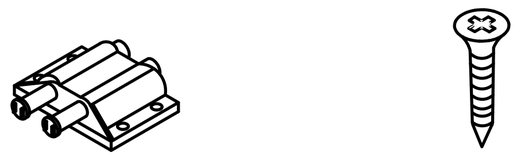	Rebound device & Screw (3x16mm)	4pcs +1pcs 1pcs
	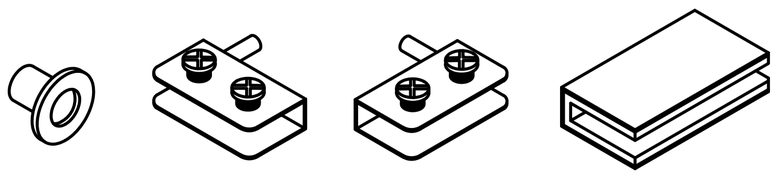	Iron sheet&Hinge	4 pcs / 2 pcs / 2 pcs / 2 pcs
H	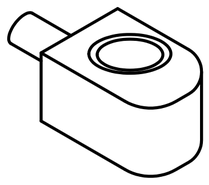	Laminate Support Nail	4pcs +1pcs
I	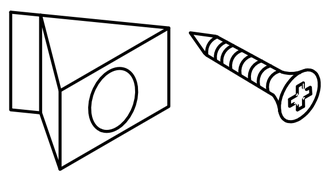	Fixing Clip & Screw (3x16mm)	10pcs +2pcs
J	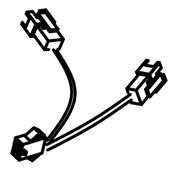	Double end connecting line	1pcs
K	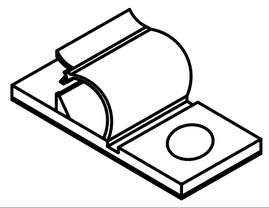	Wire clamp	2pcs +1pcs
L	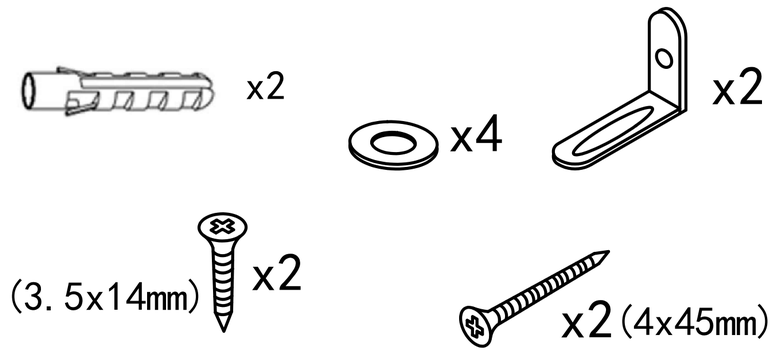	Anti Fall Hardware	1pcs

Socket (3x10mm)

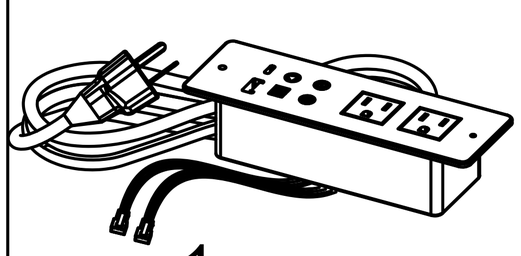

1pcs

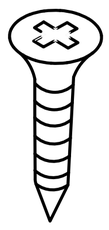

2pcs

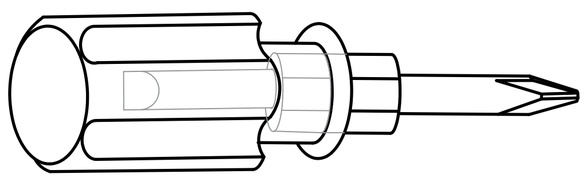

1pcs

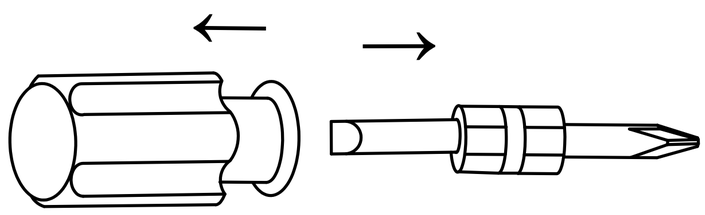

Double-head screwdriver, use as required

Product structure decomposition

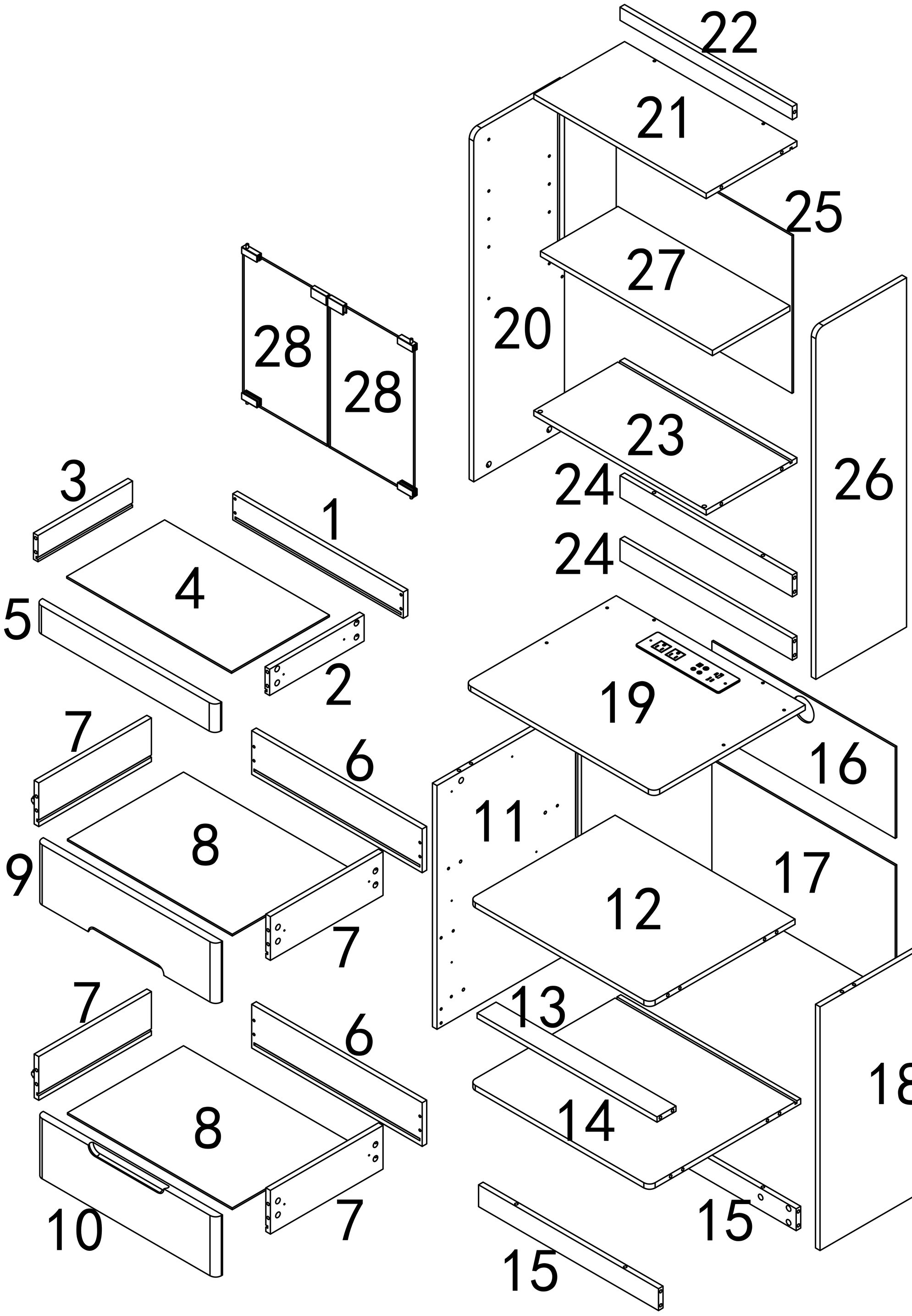

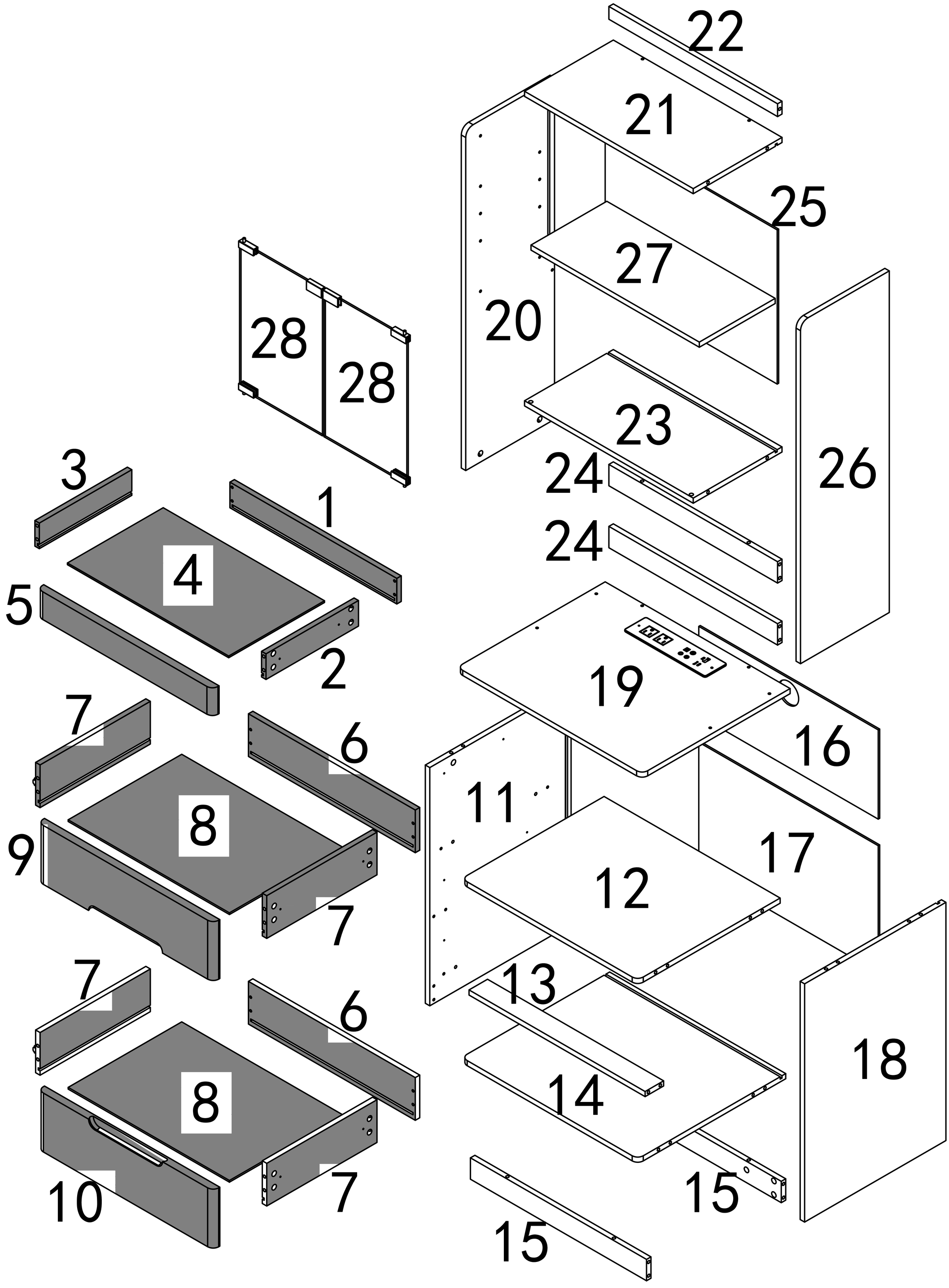
22
21
25
27
20
28
28
23
24
26
24
3
1
4
5
2
19
7
16
6
11
17
8
9
12
7
13
7
6
18
14
8
15
10
7
15

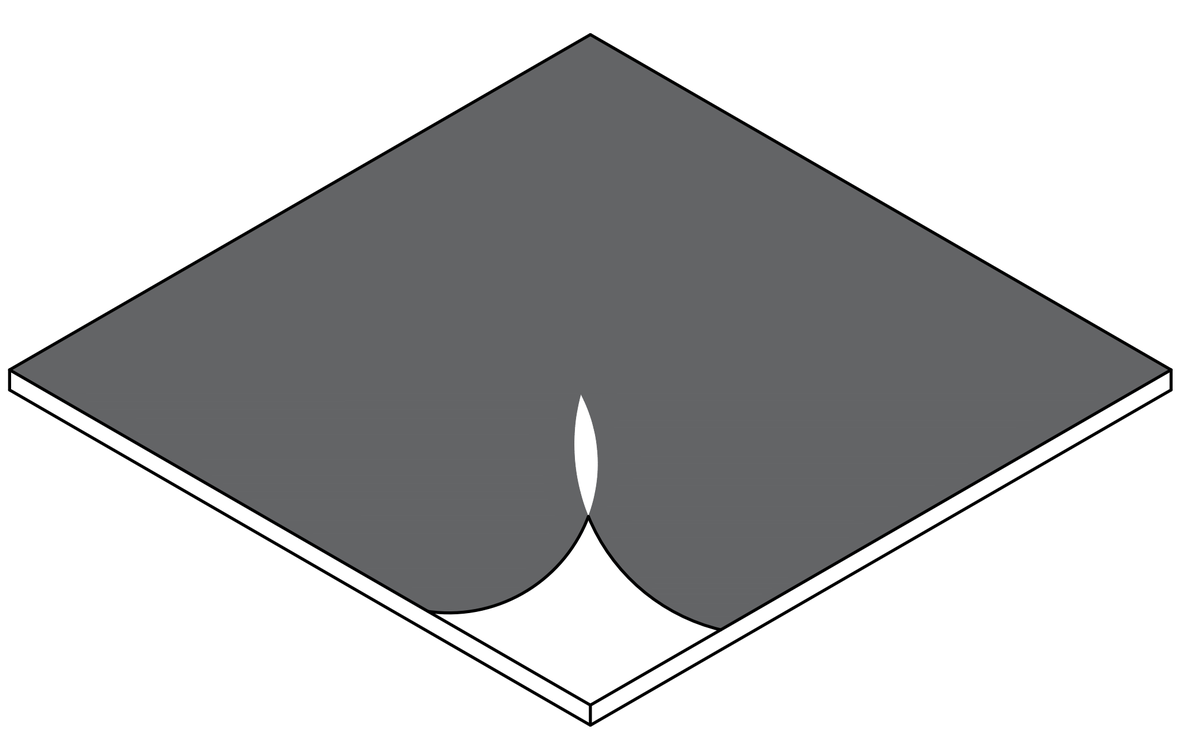

The plates used in this product are bright plates,

With a transparent protective film

The function of the protective film is prevent the product from

being scratched during transportation

Please remove the protective film before installing the product,

Avoid difficult removal of the protective film after installation

Use parts ① and ②

Step1

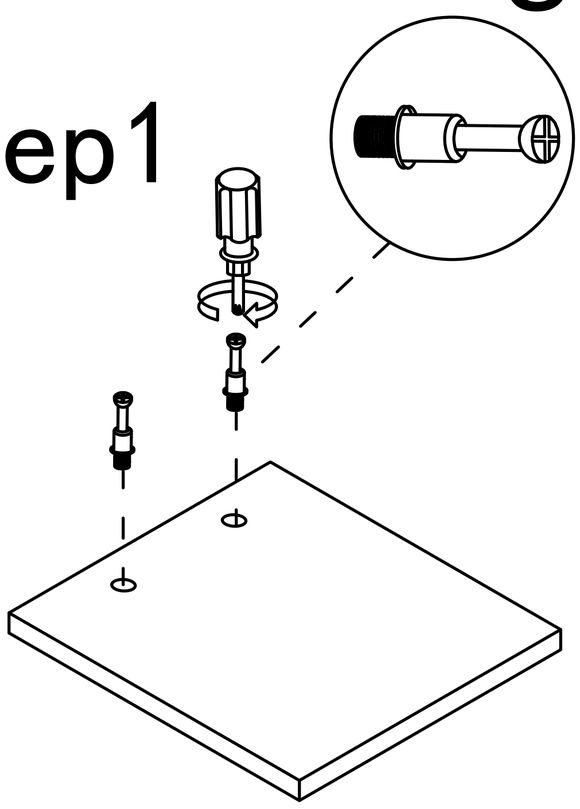

Step2

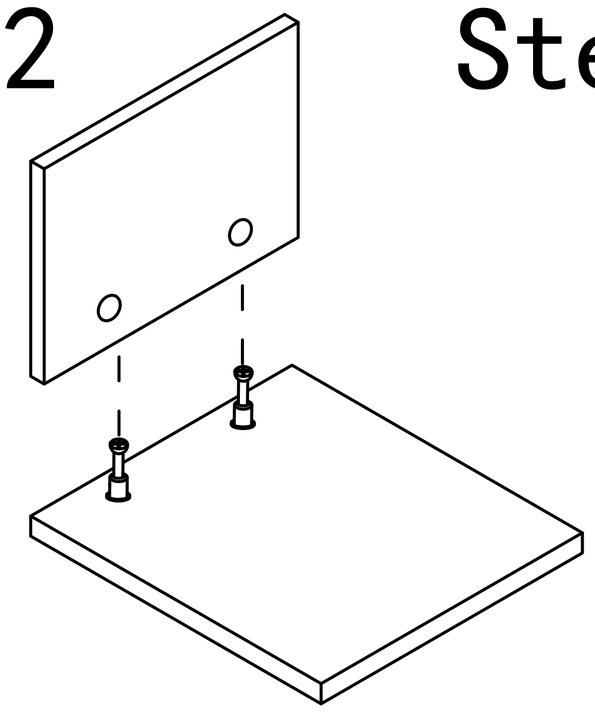

Step3

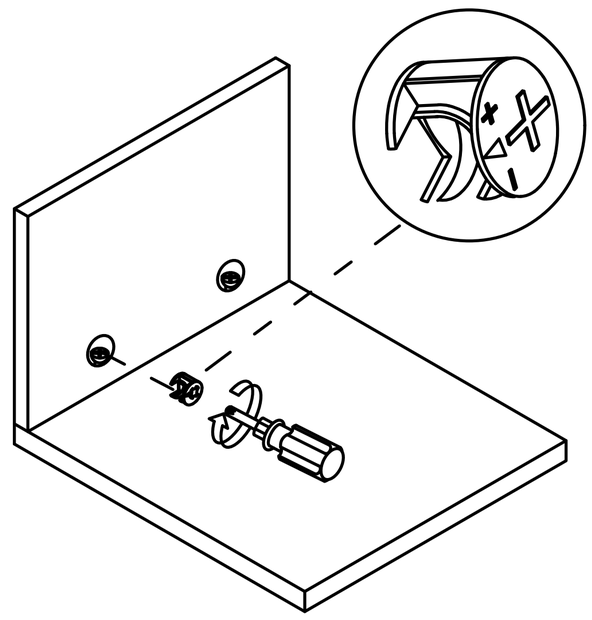

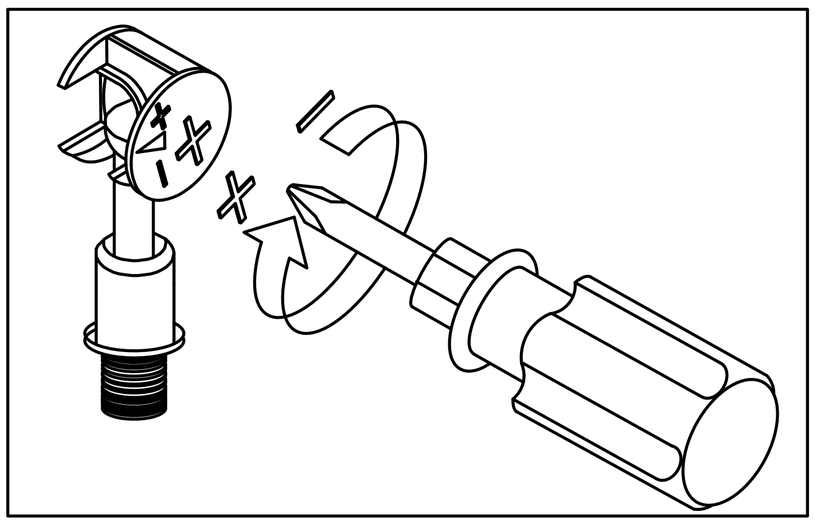

Use a screwdriver to lock in the direction of the "+" sign

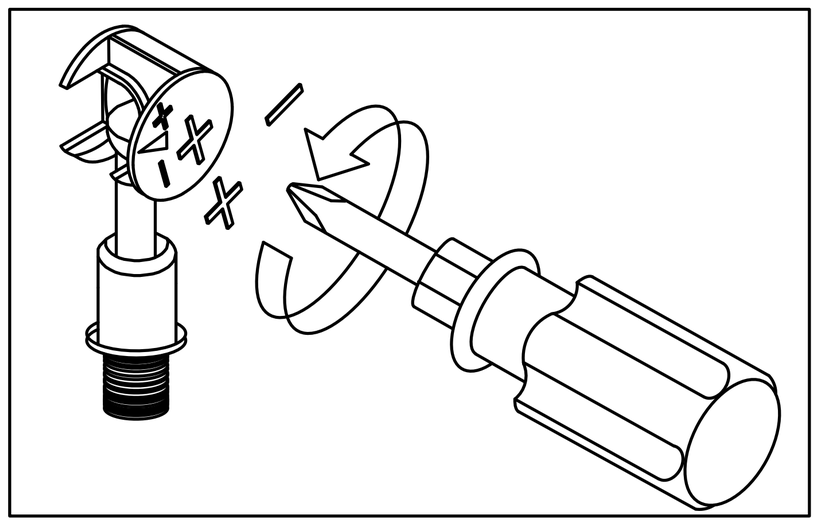

Disassemble along the direction of "-" sign

Step 1

A x4

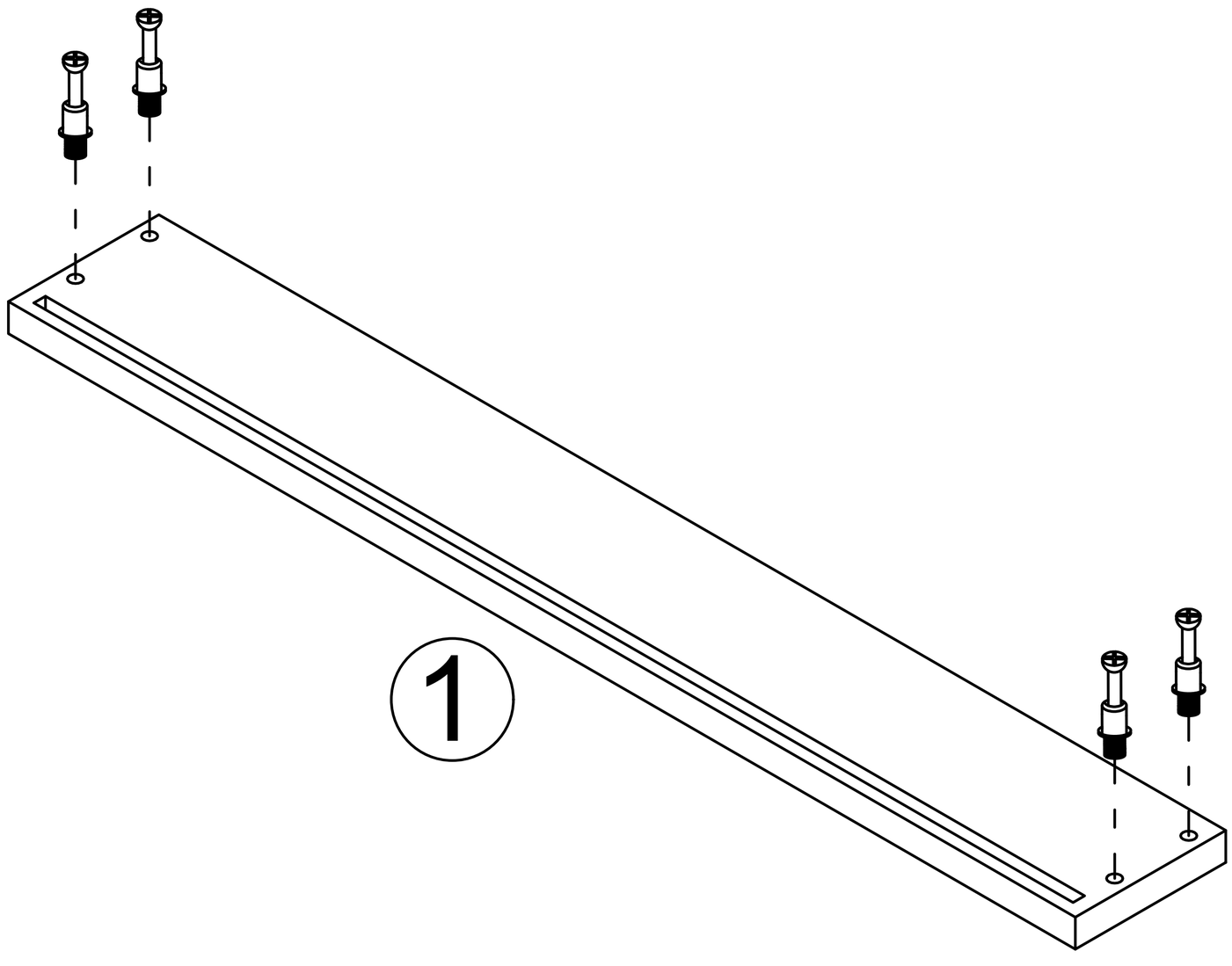

Step 2

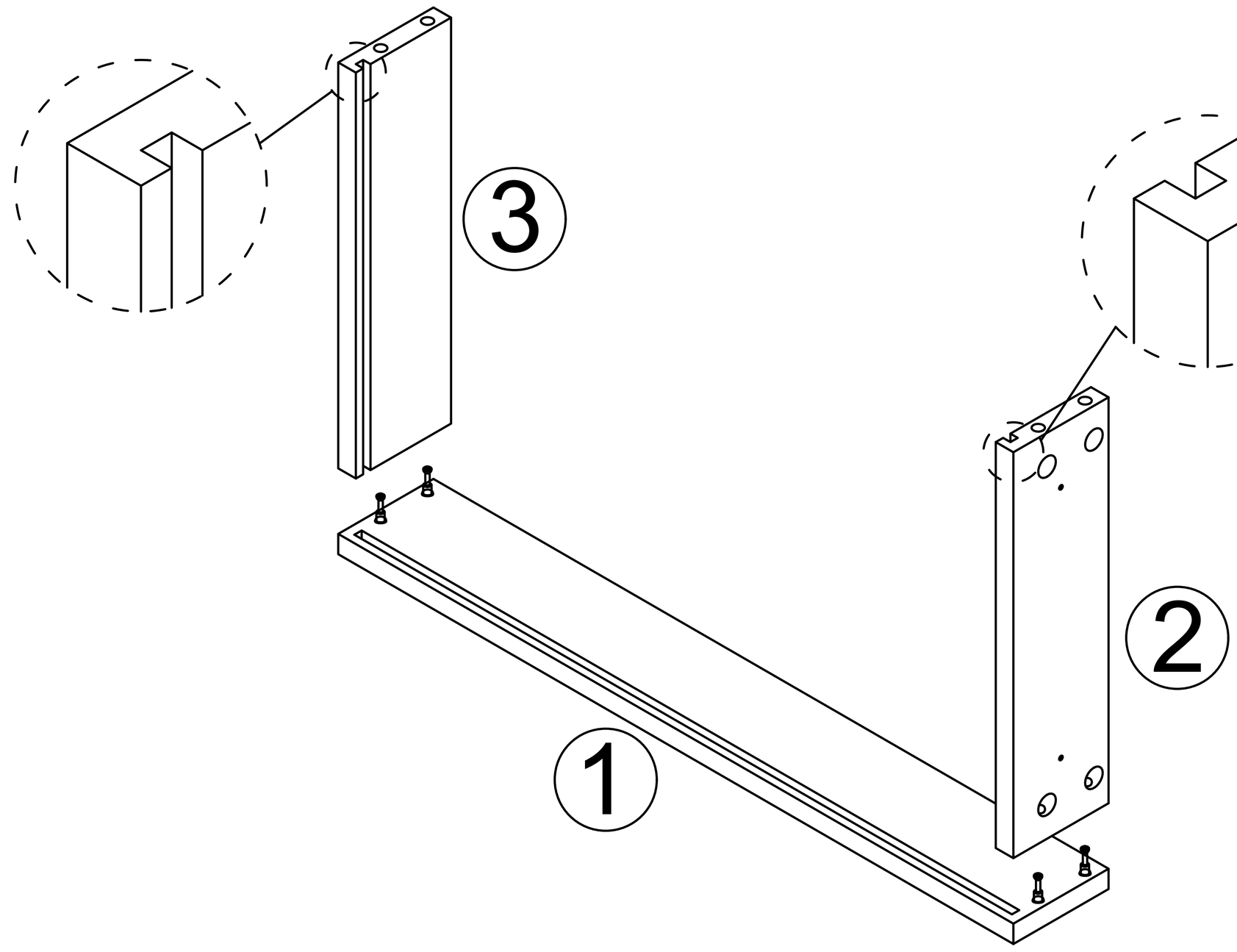

Step 3

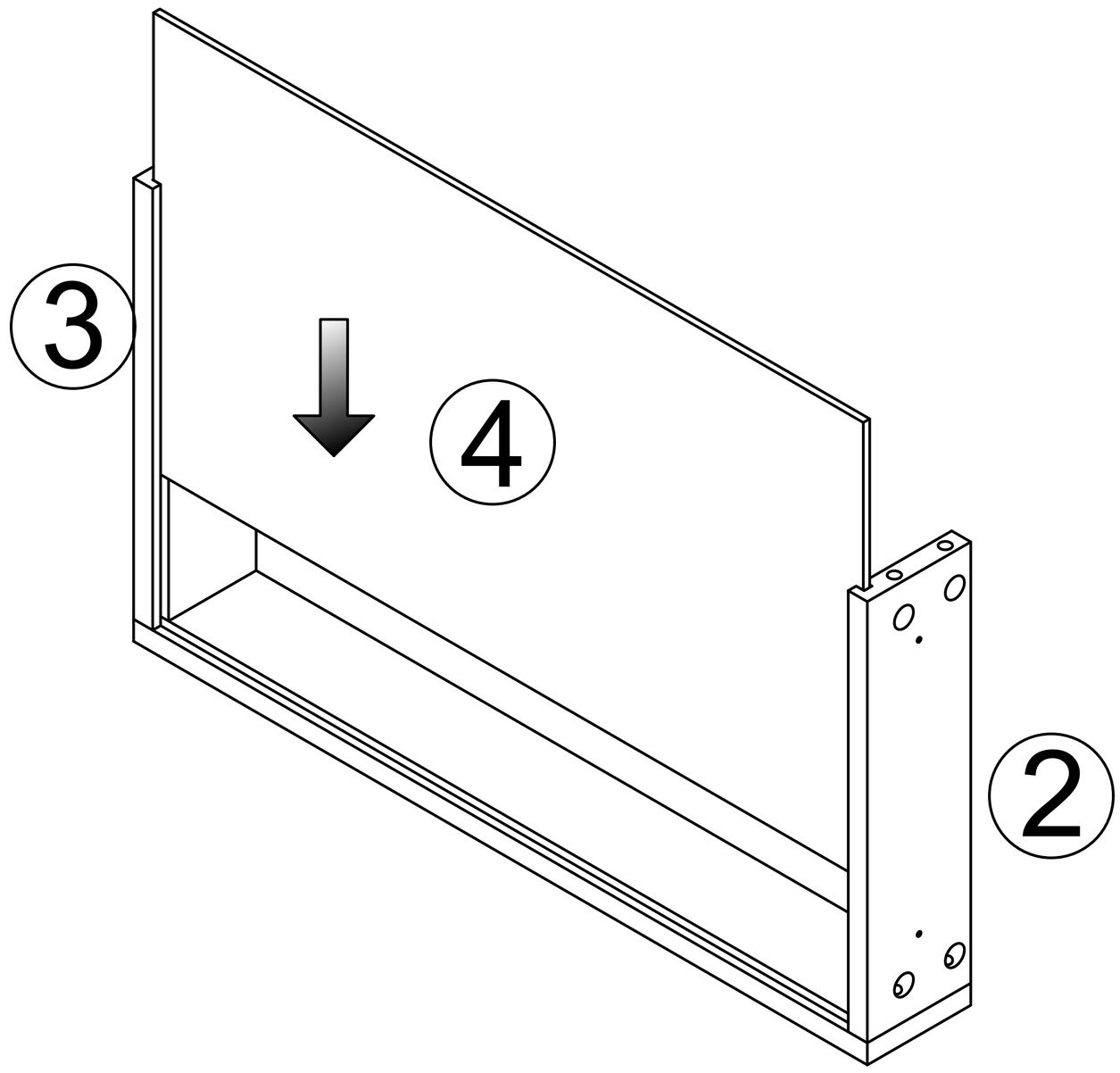

Step 4

A x4

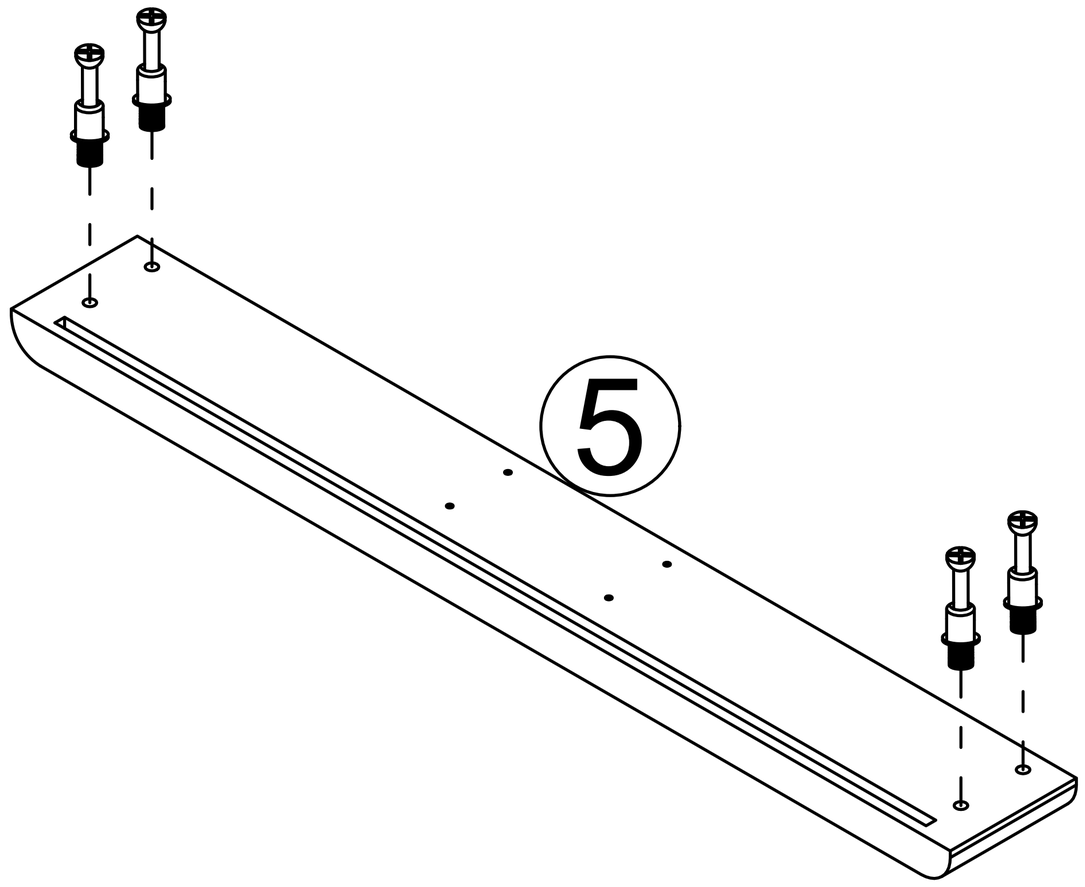

Step 5

B x8

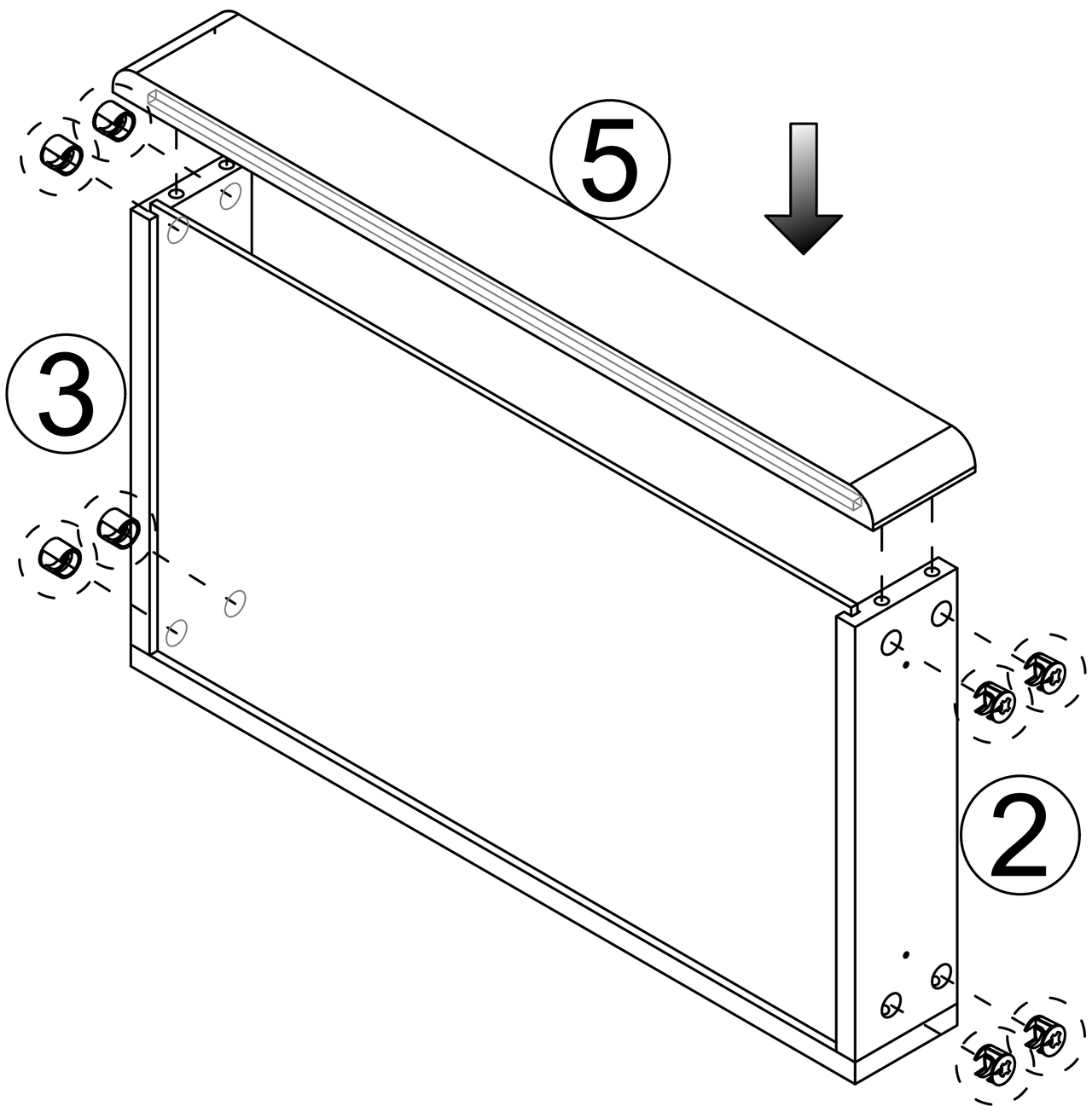

Drawer rail breakdown diagram

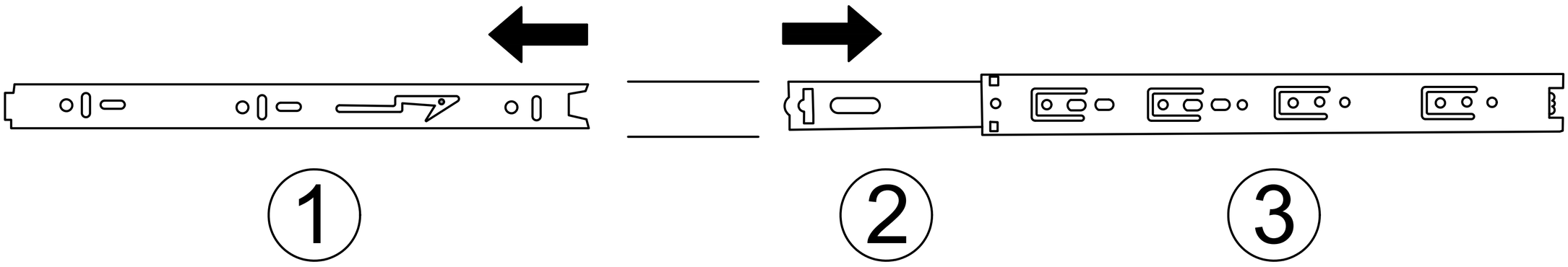

① Dismantle the schematic diagram

Step 1 : Pull the rails apart

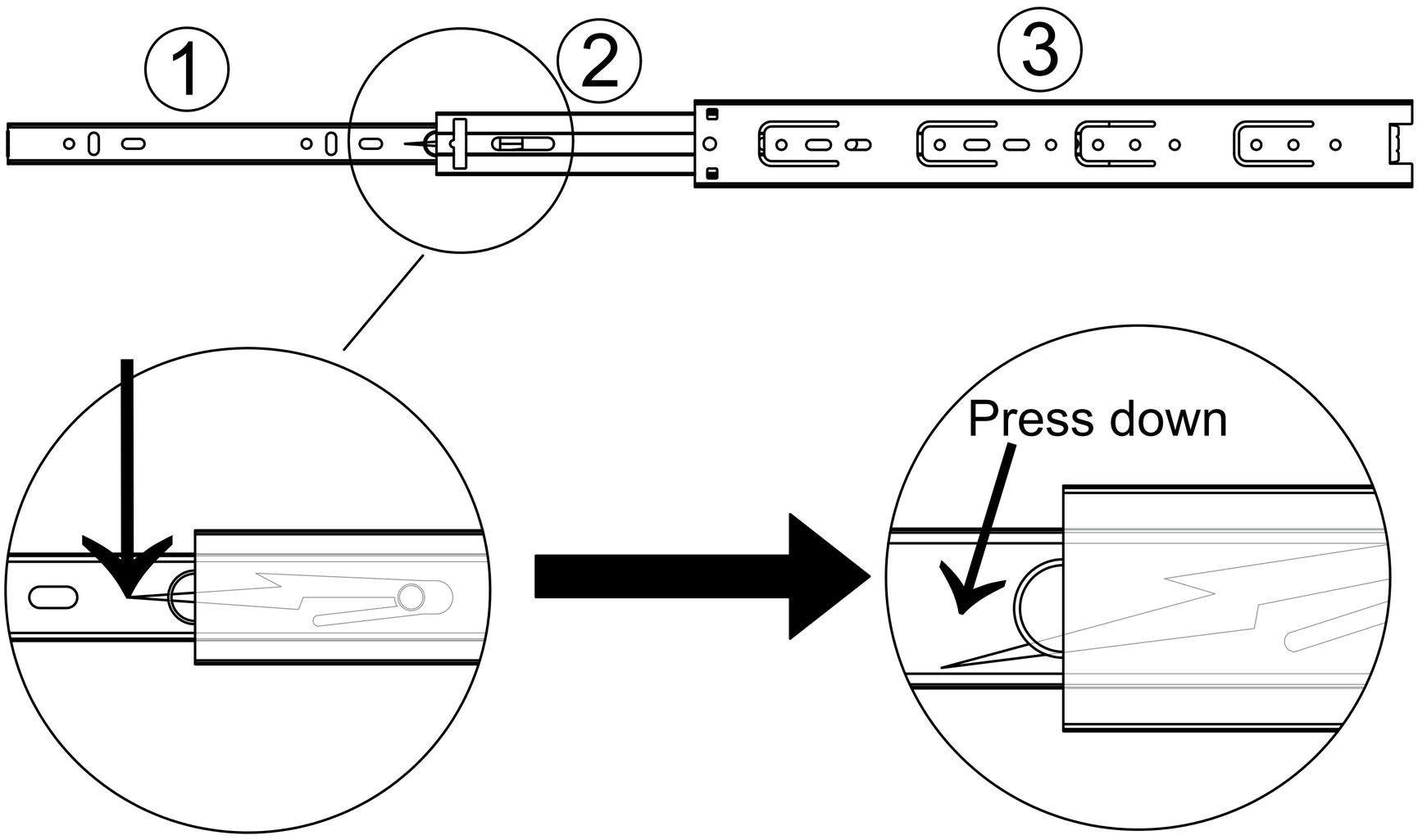

Step 2 : Press the nylon button and pull out ①.

Drawer rail decomposition completed schematic diagram

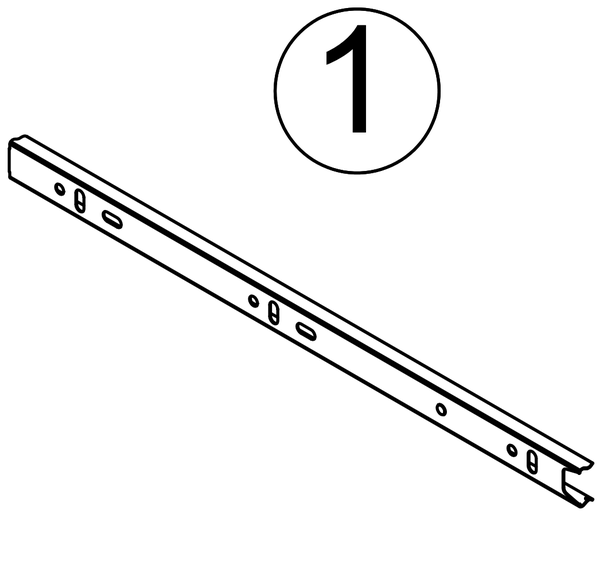

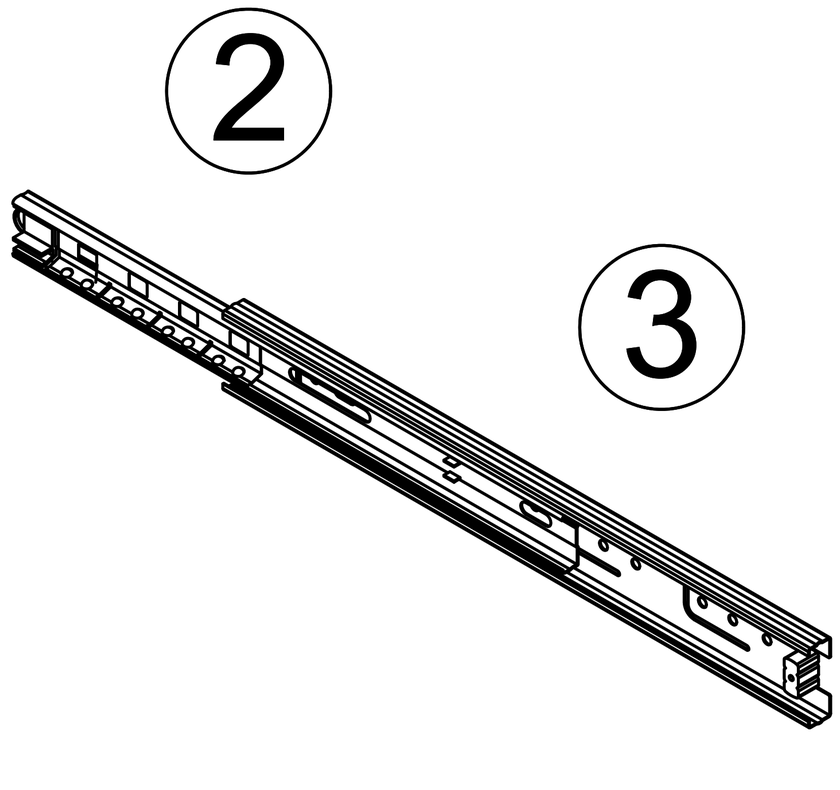

Step 6

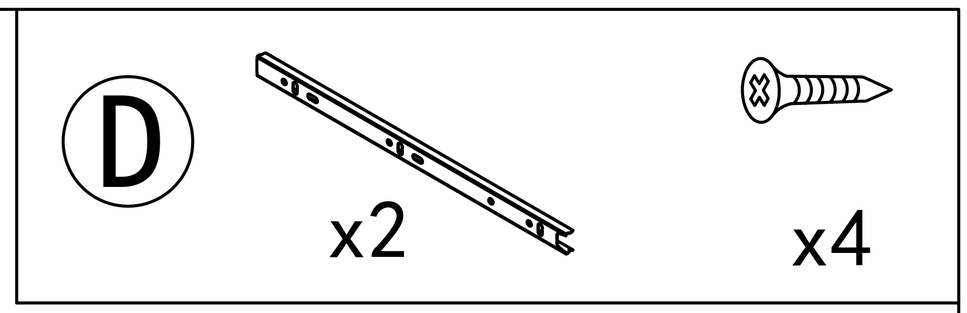

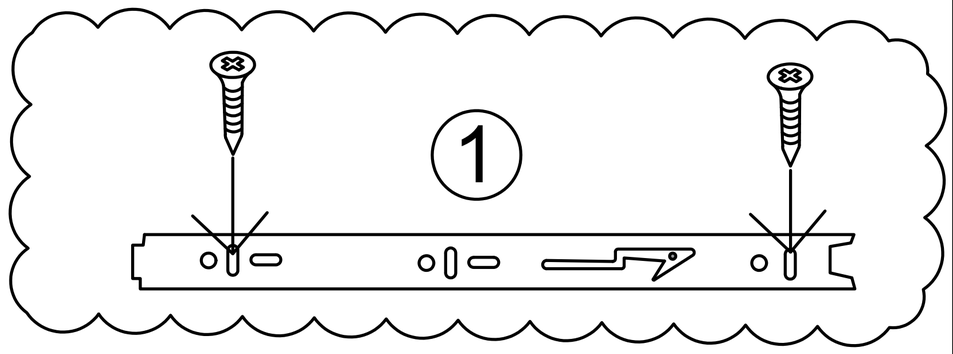

Install with Material No.D here.

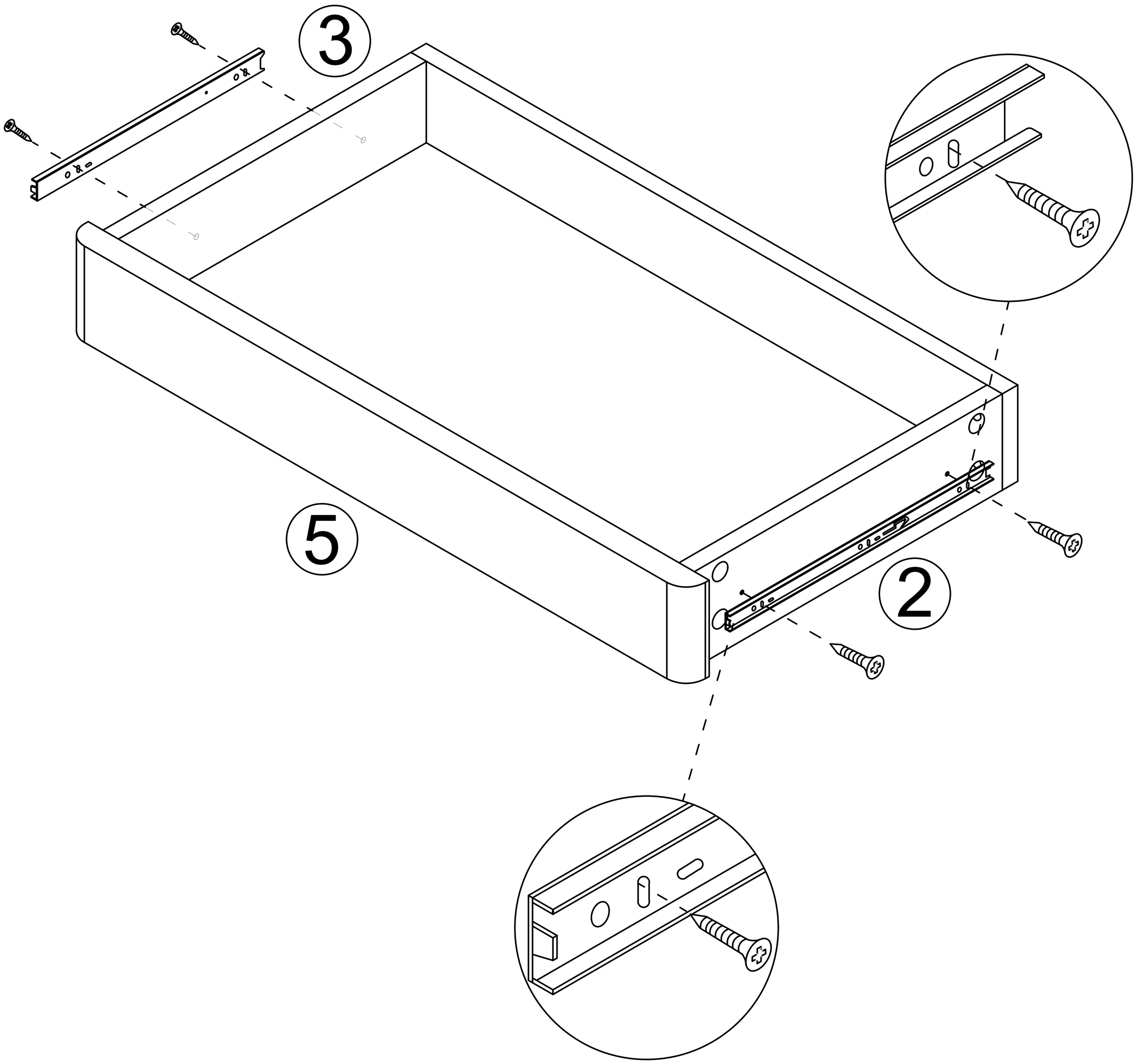

Step 7

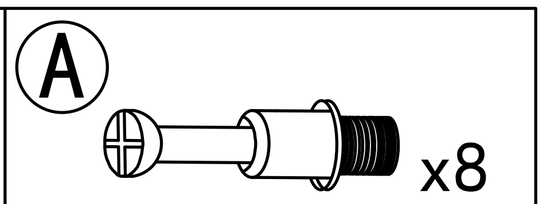

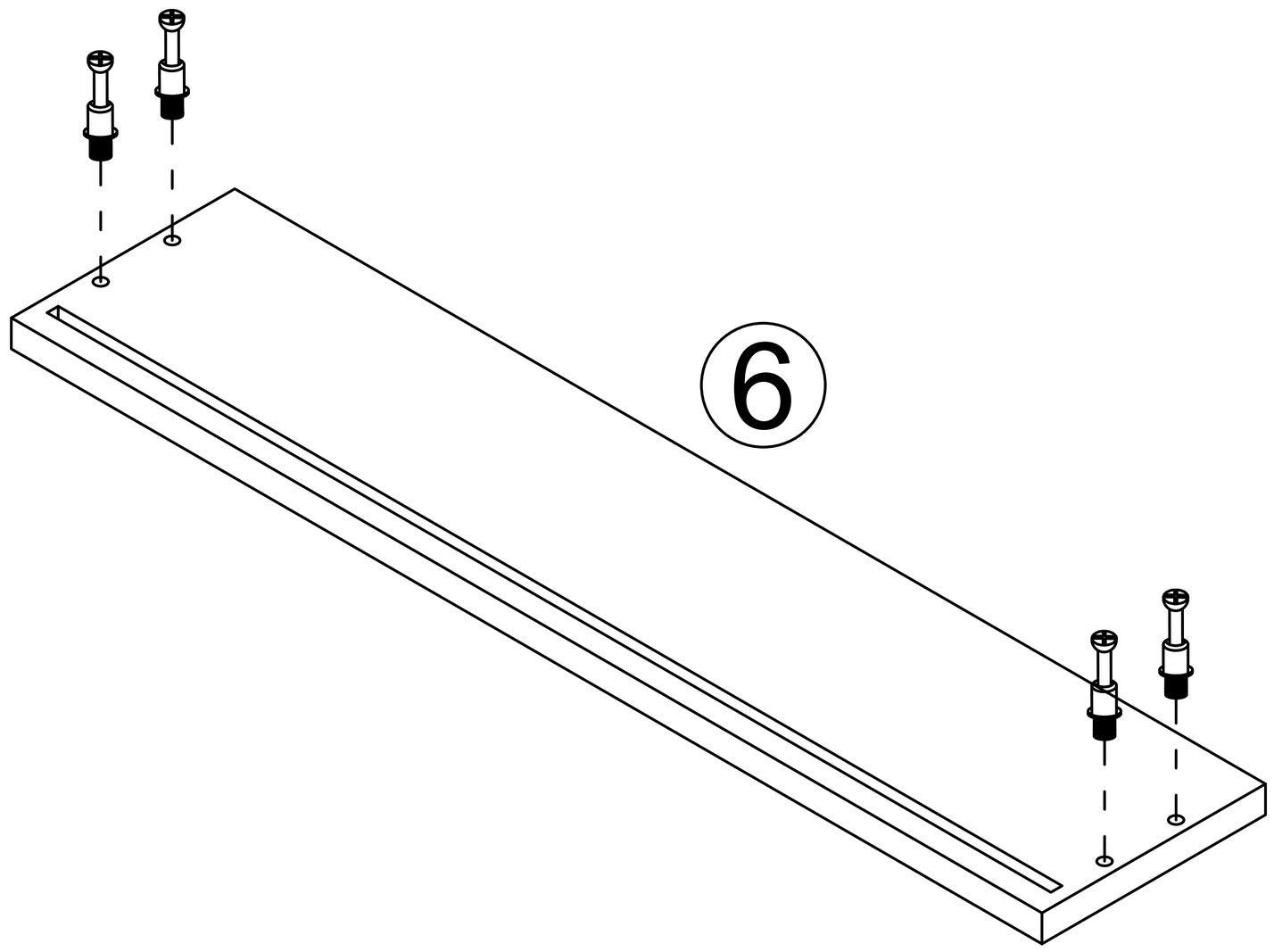

Steps and objects x2

Step 8

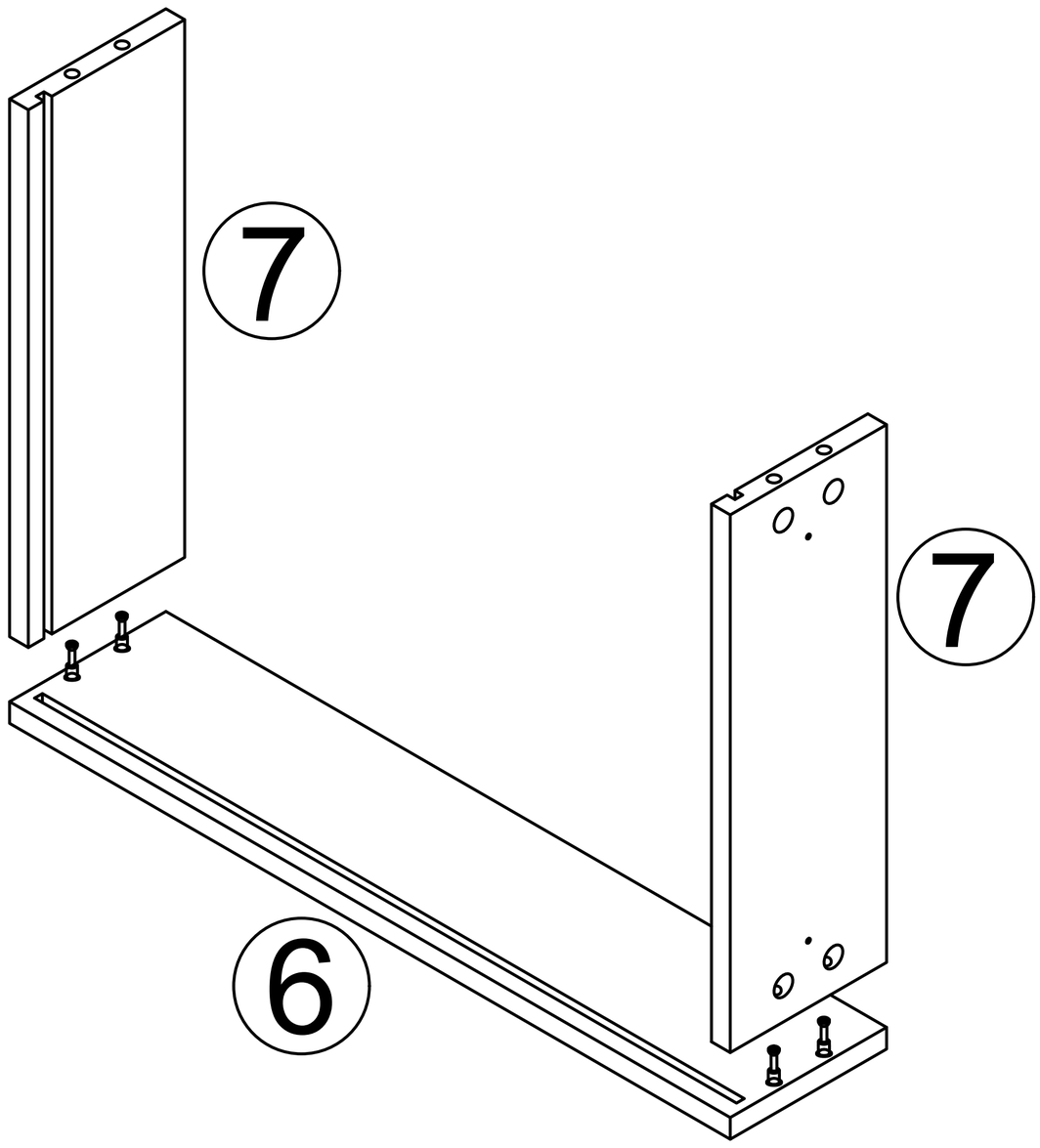

Steps and objects x2

Step 9

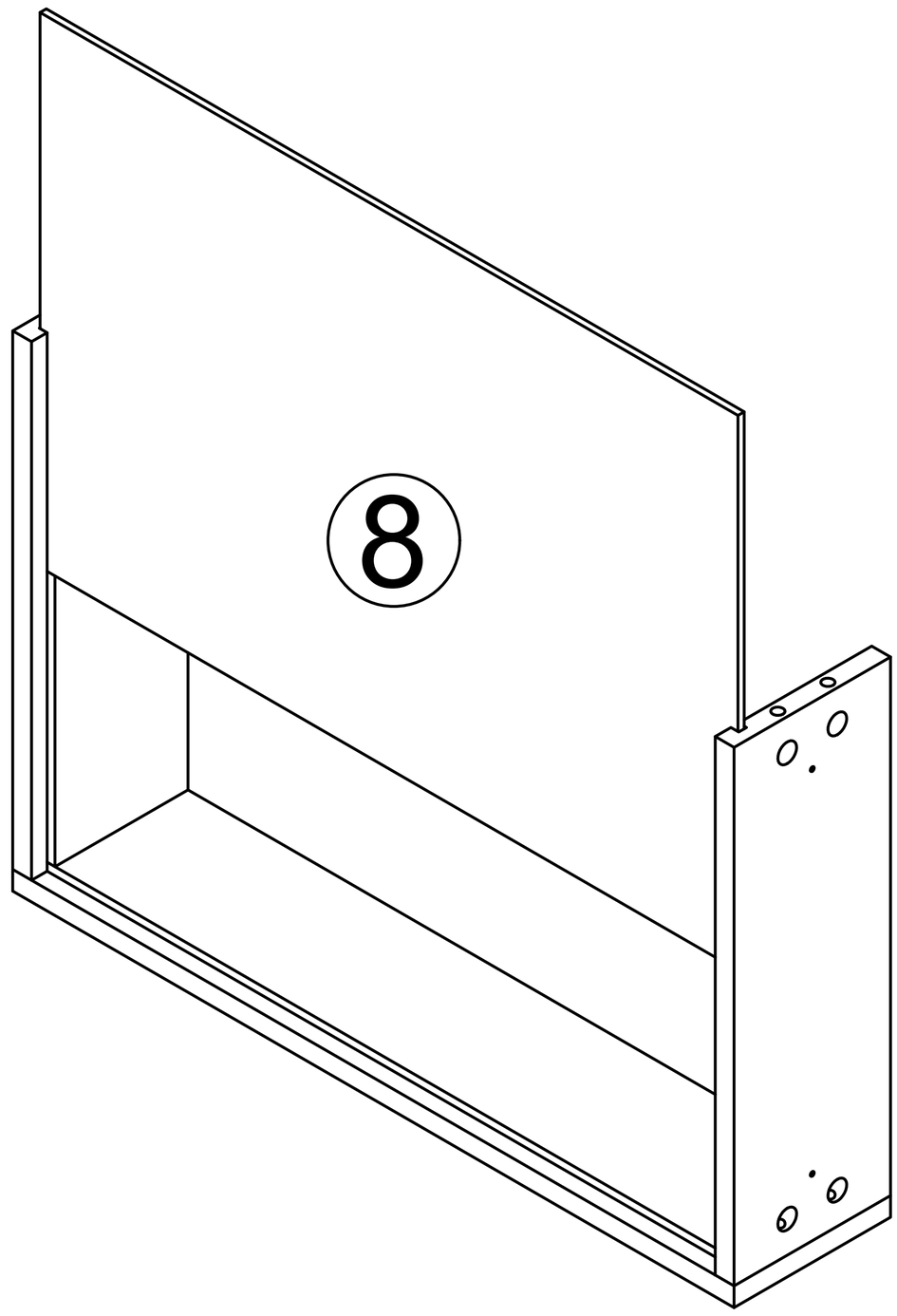

Steps and objects x2

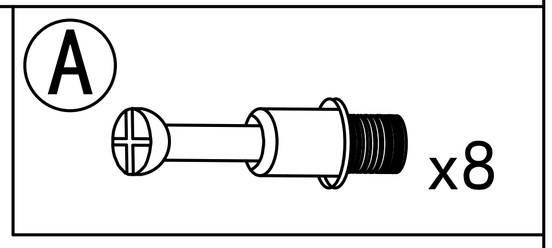

Step 10

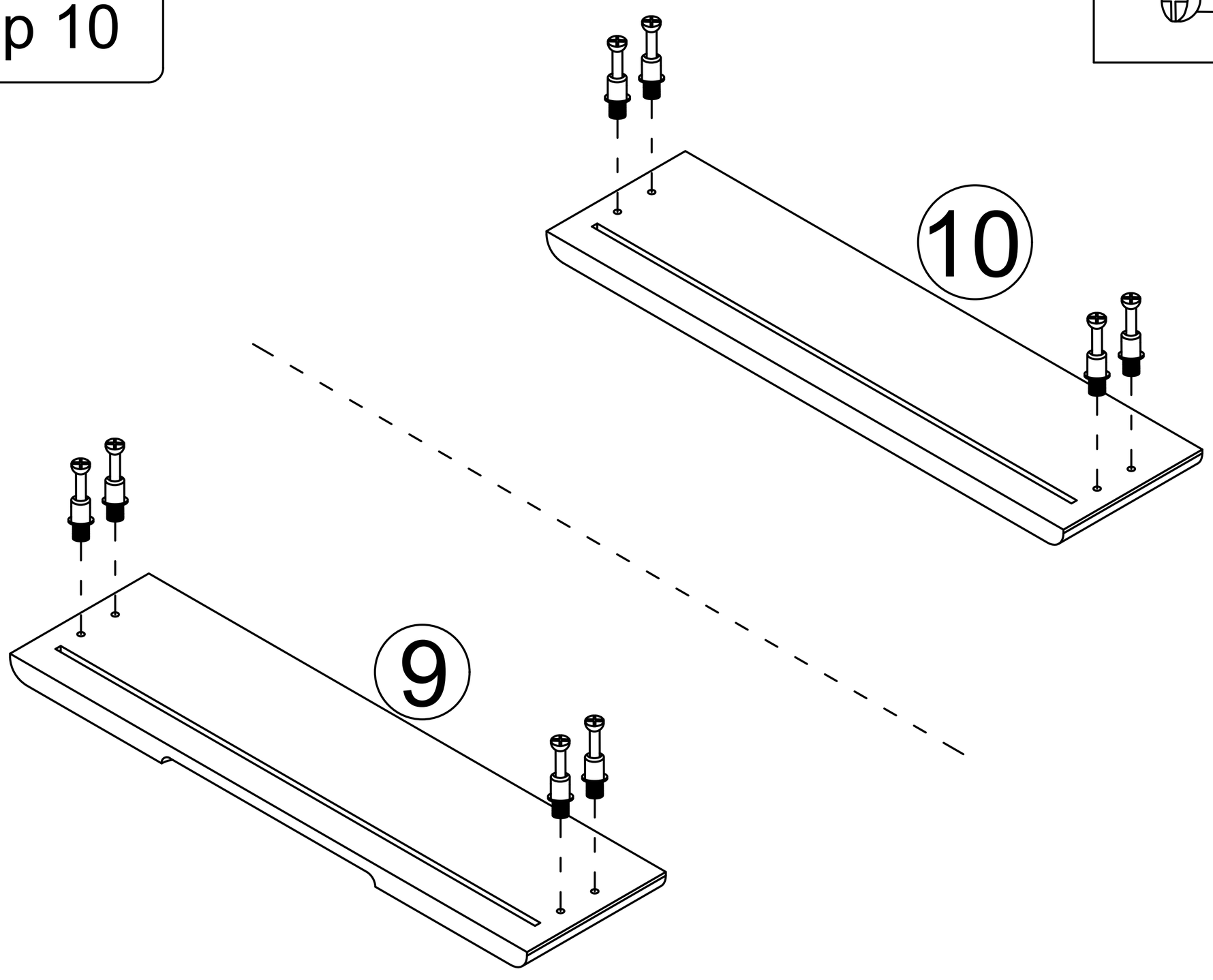

Step 11

B x8

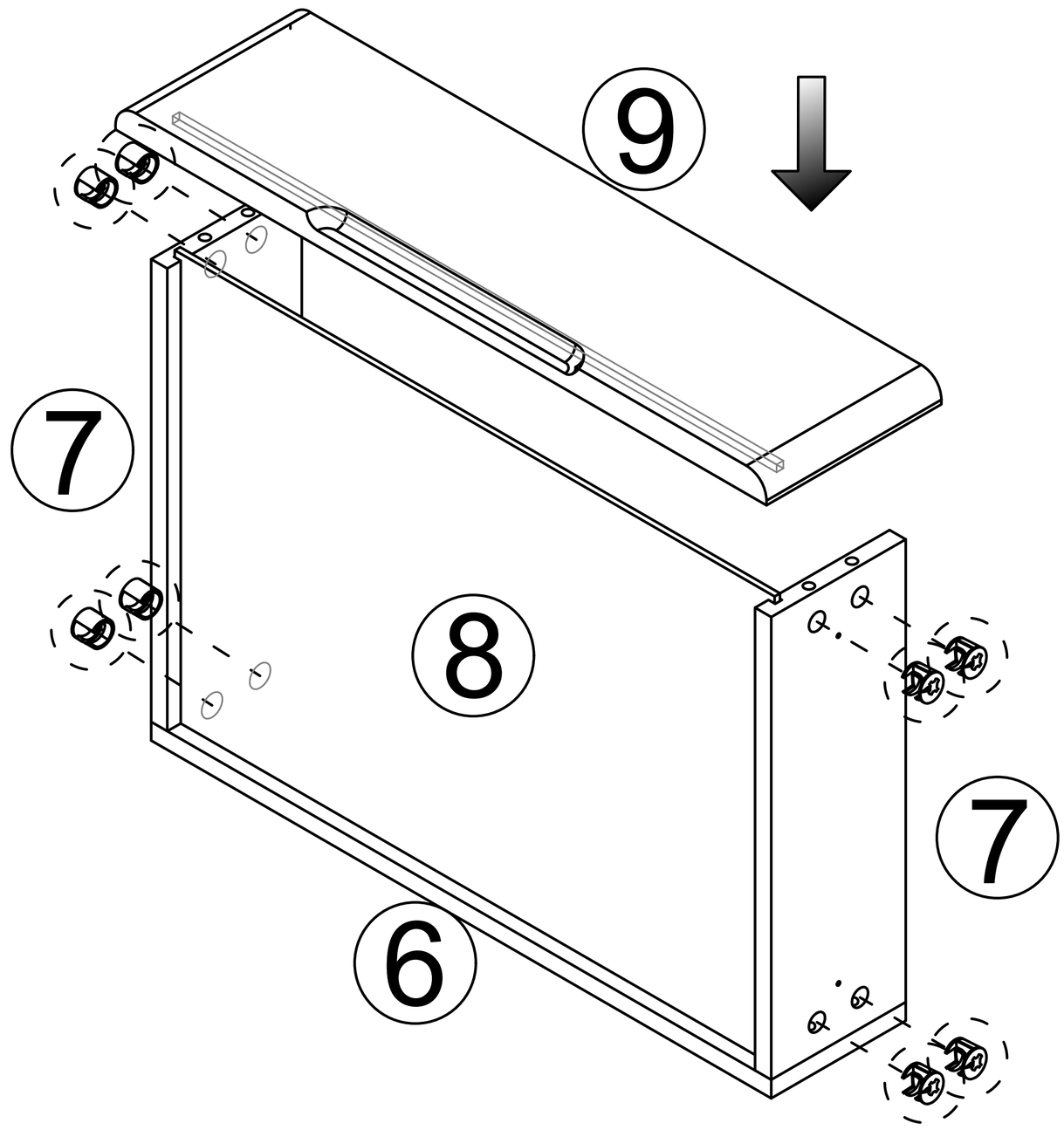

Step 12

B x8

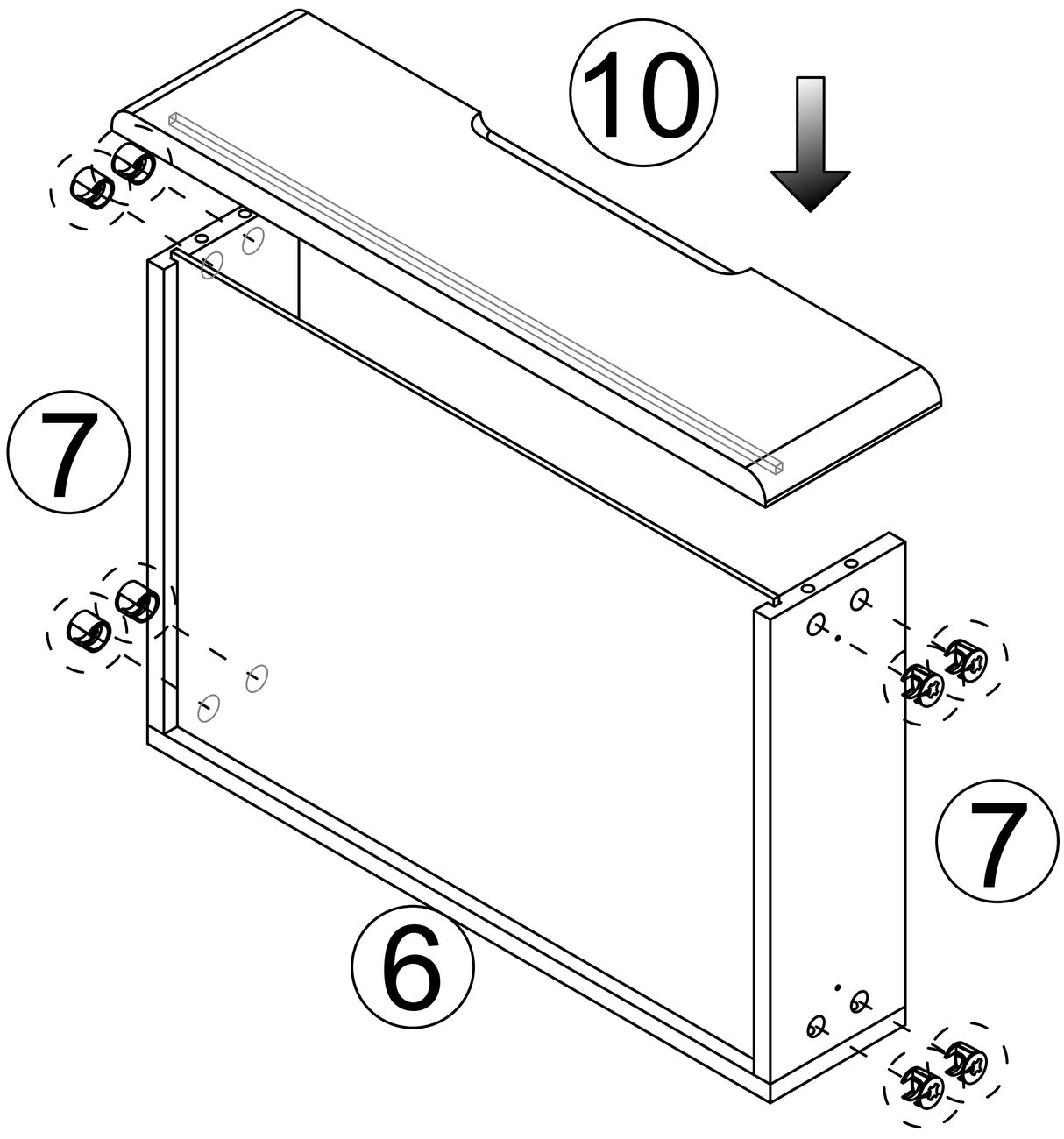

Step 13

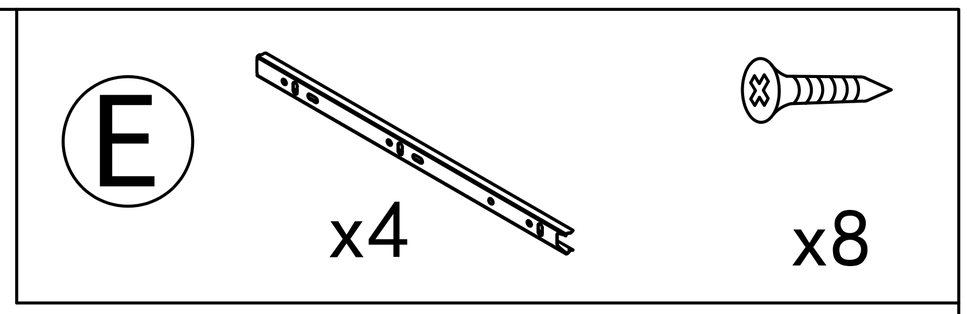

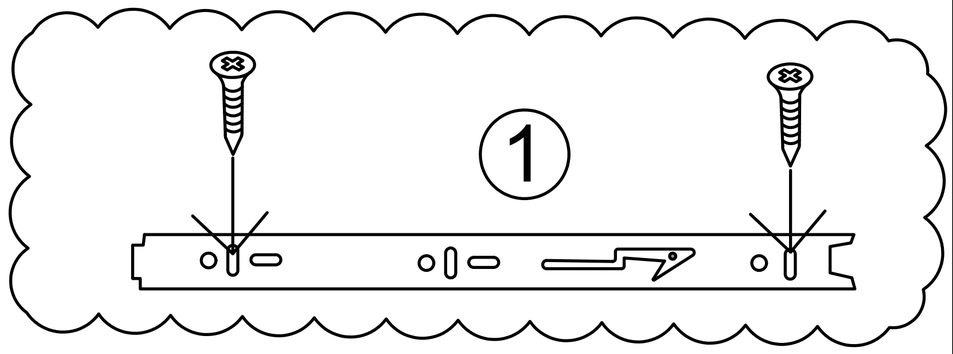

Install with Material No.E here.

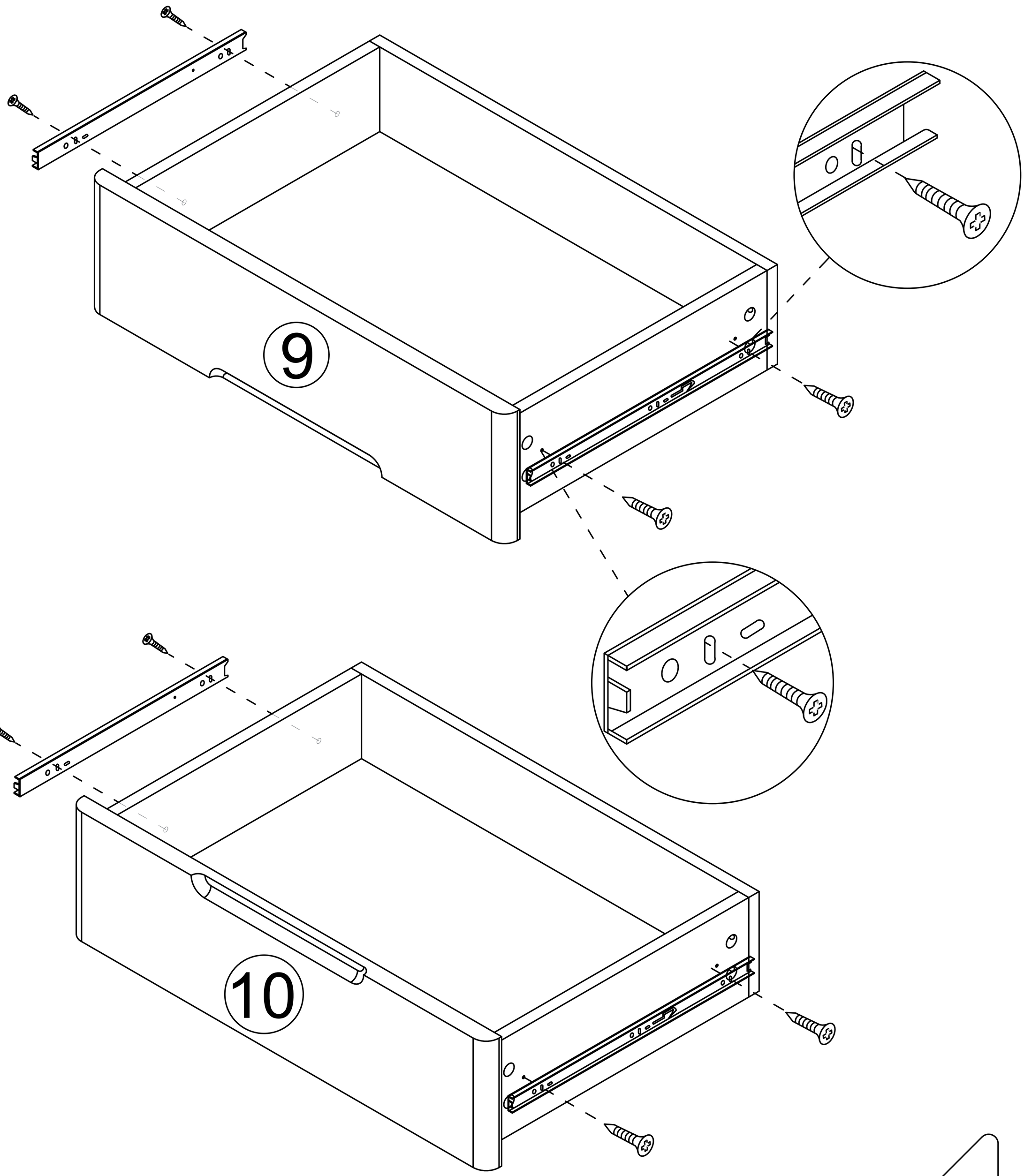

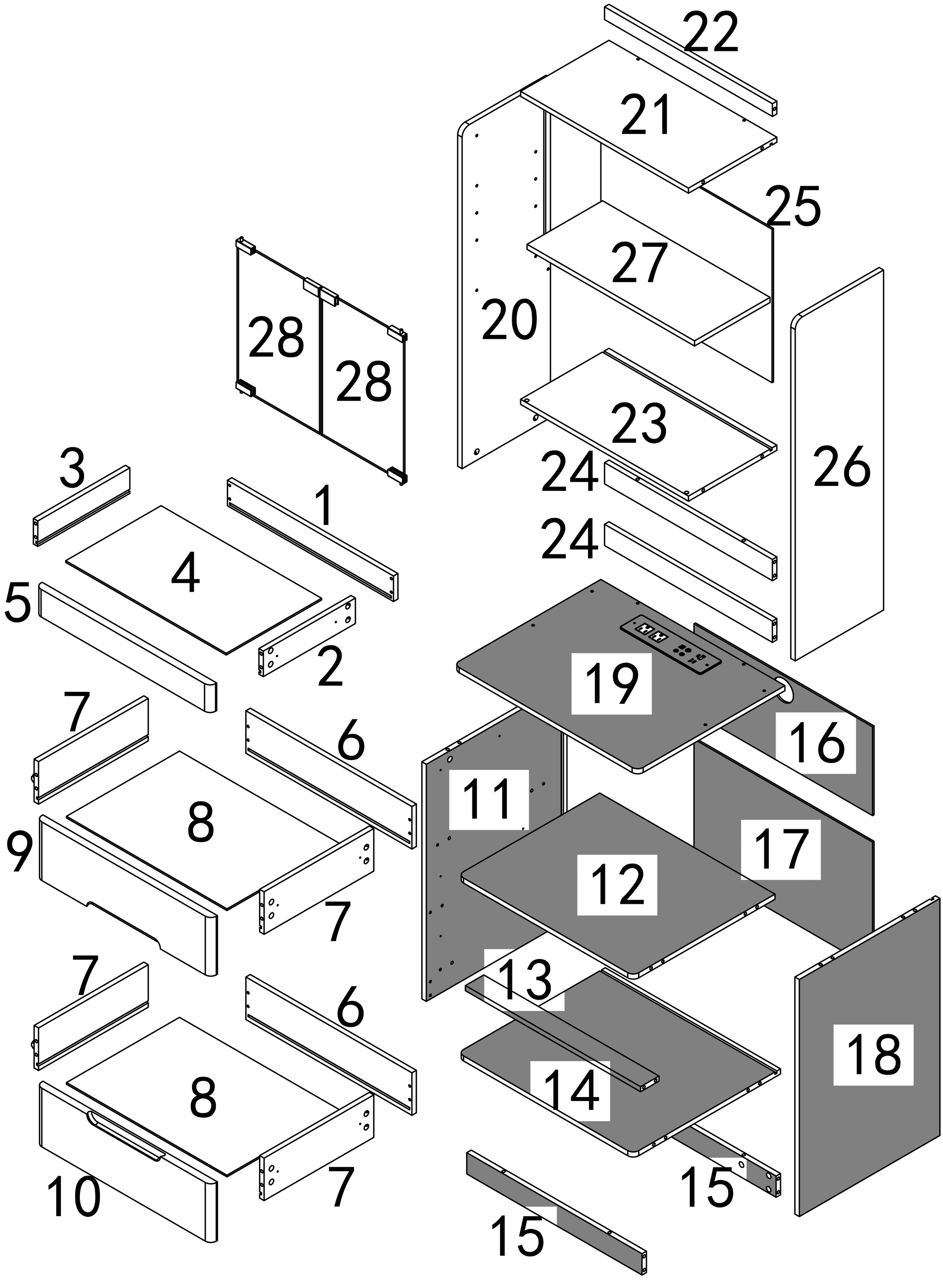
22
21
25
27
20
28
28
23
24
24
26
3
1
4
5
2
19
16
7
6
11
8
9
12
17
7
13
7
6
18
8
14
10
7
15
15

Step 14

A x10

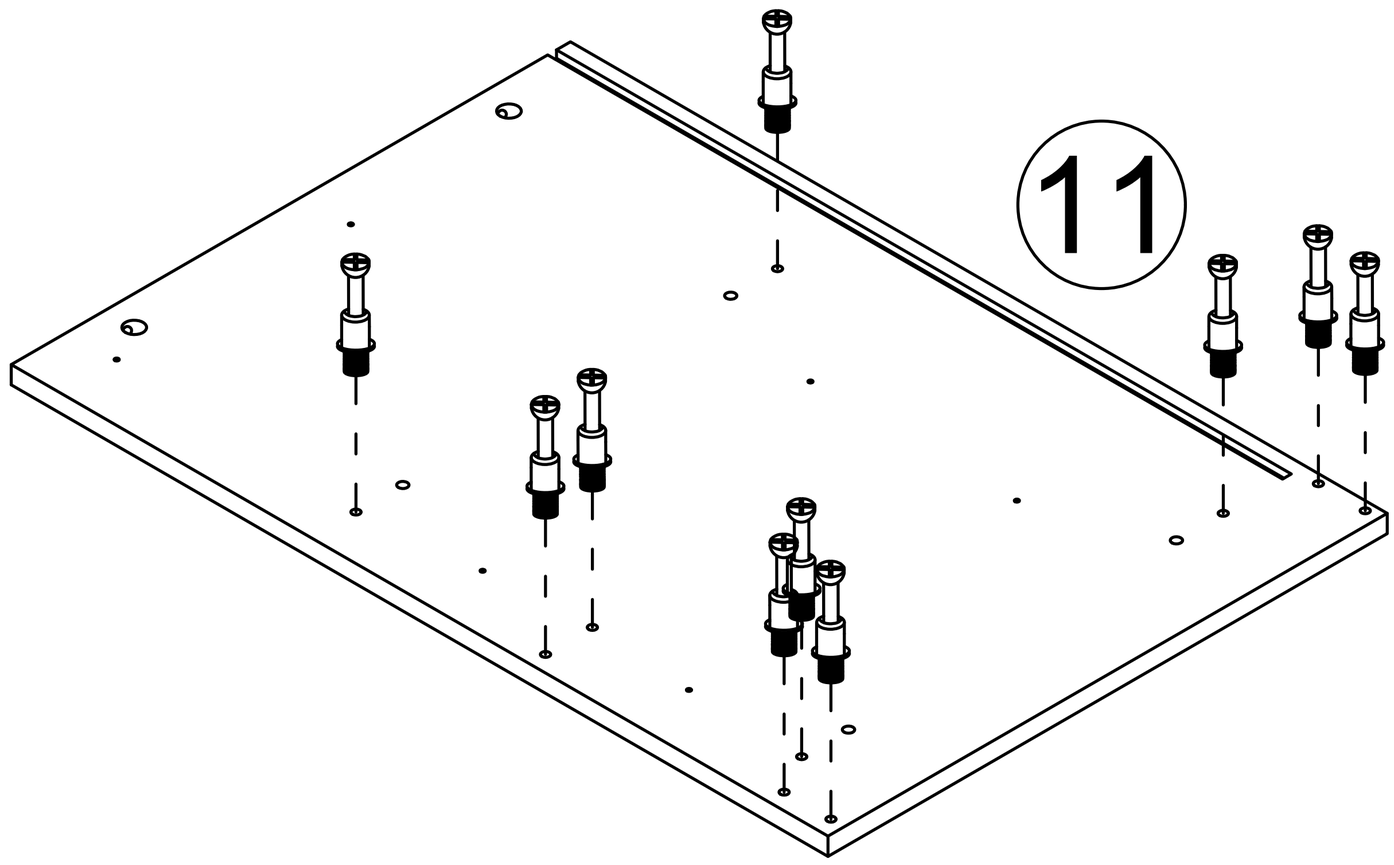

Step 15

C x4

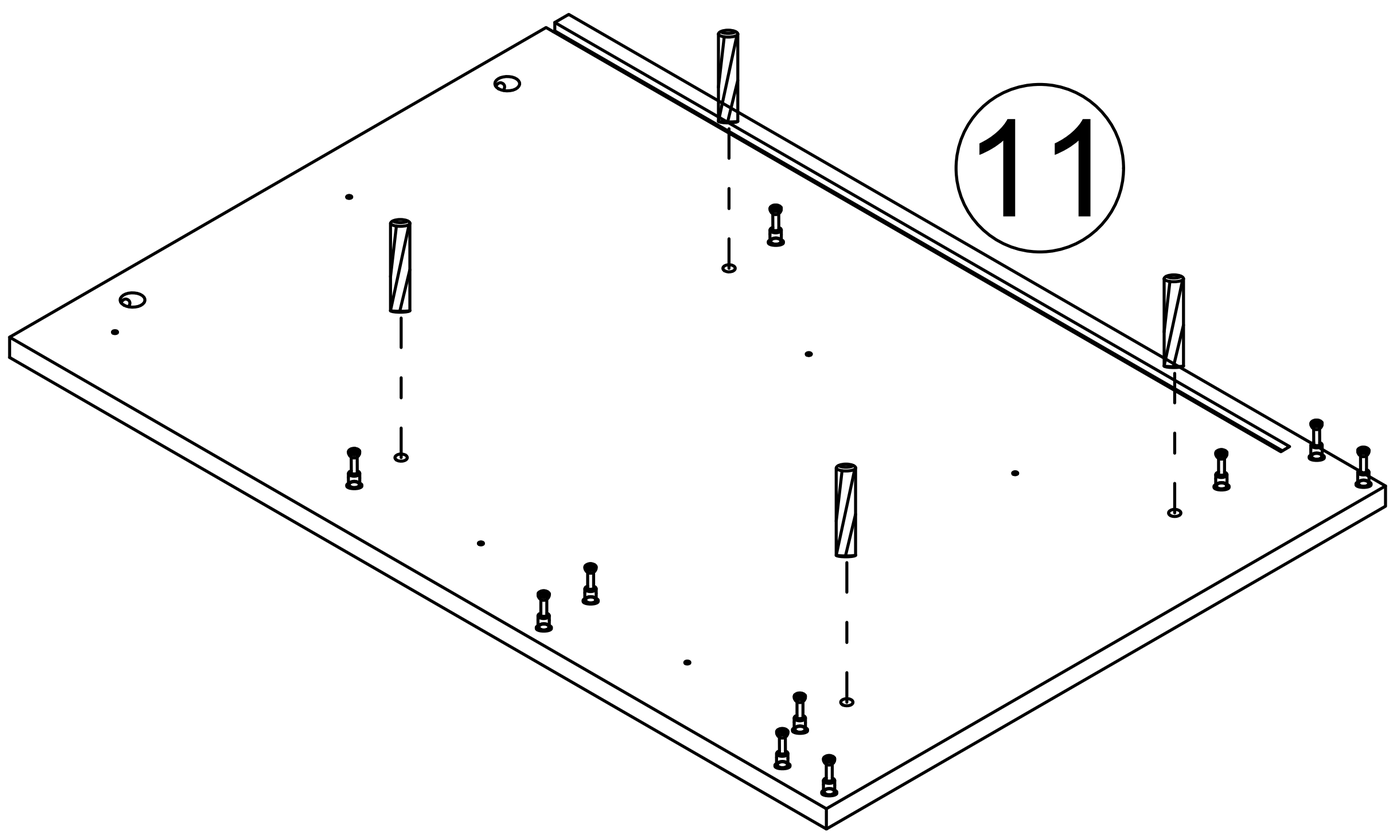

Step 16

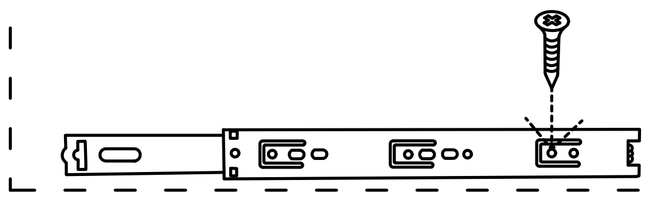

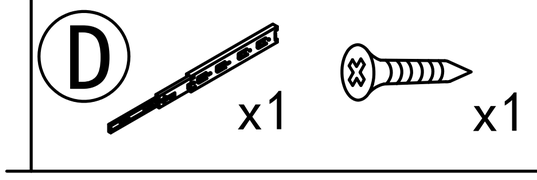

All that is needed here is to install one screw first.

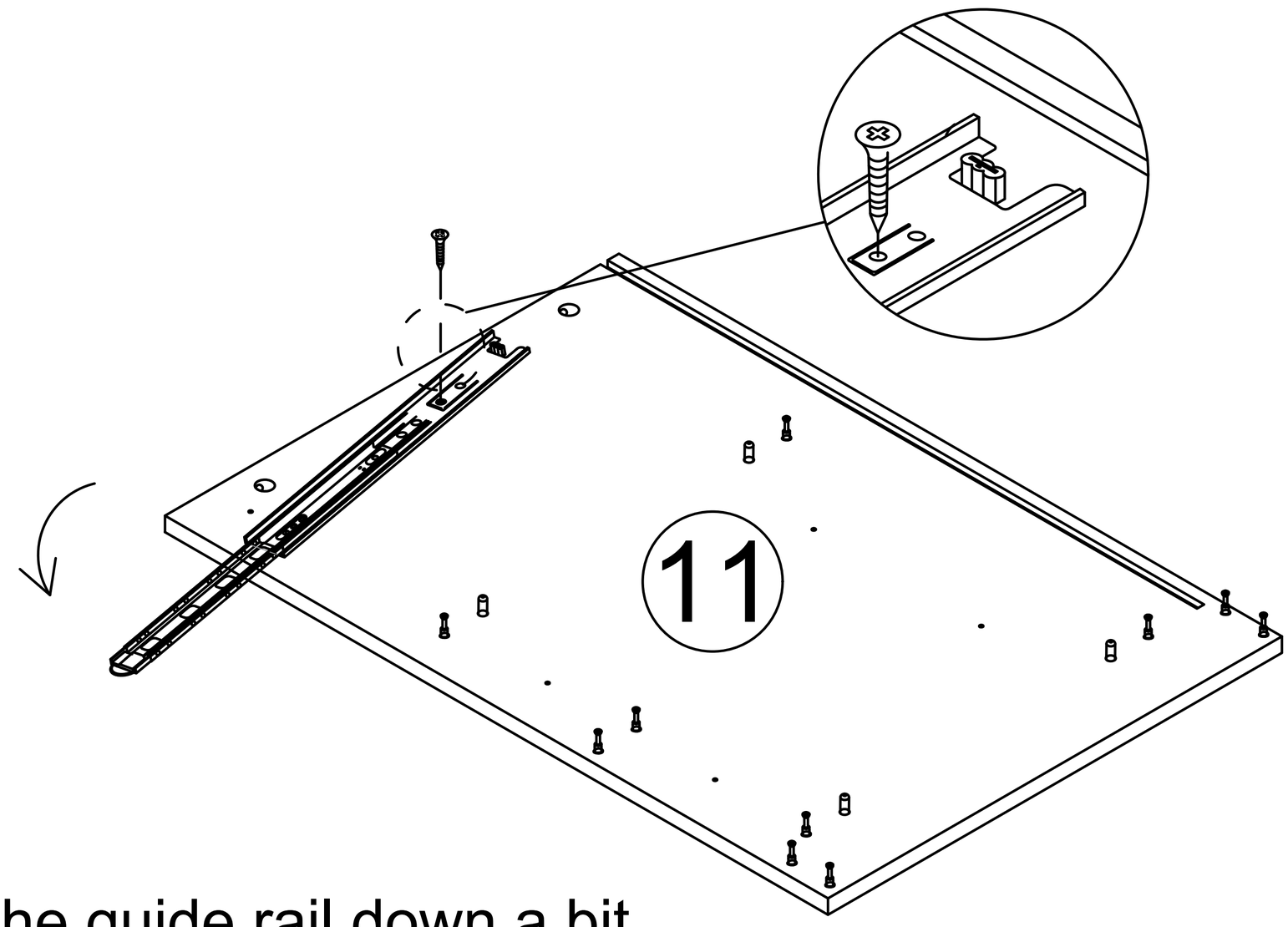

Move the guide rail down a bit
do not let it block the hole

Step 17

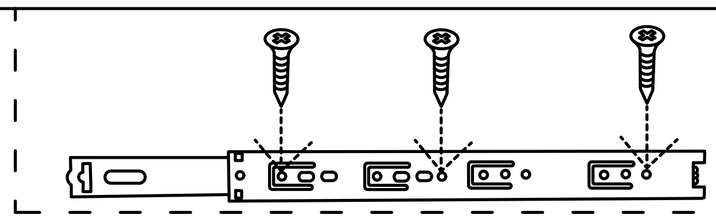

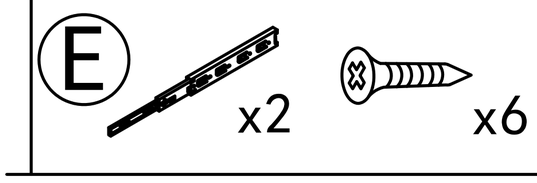

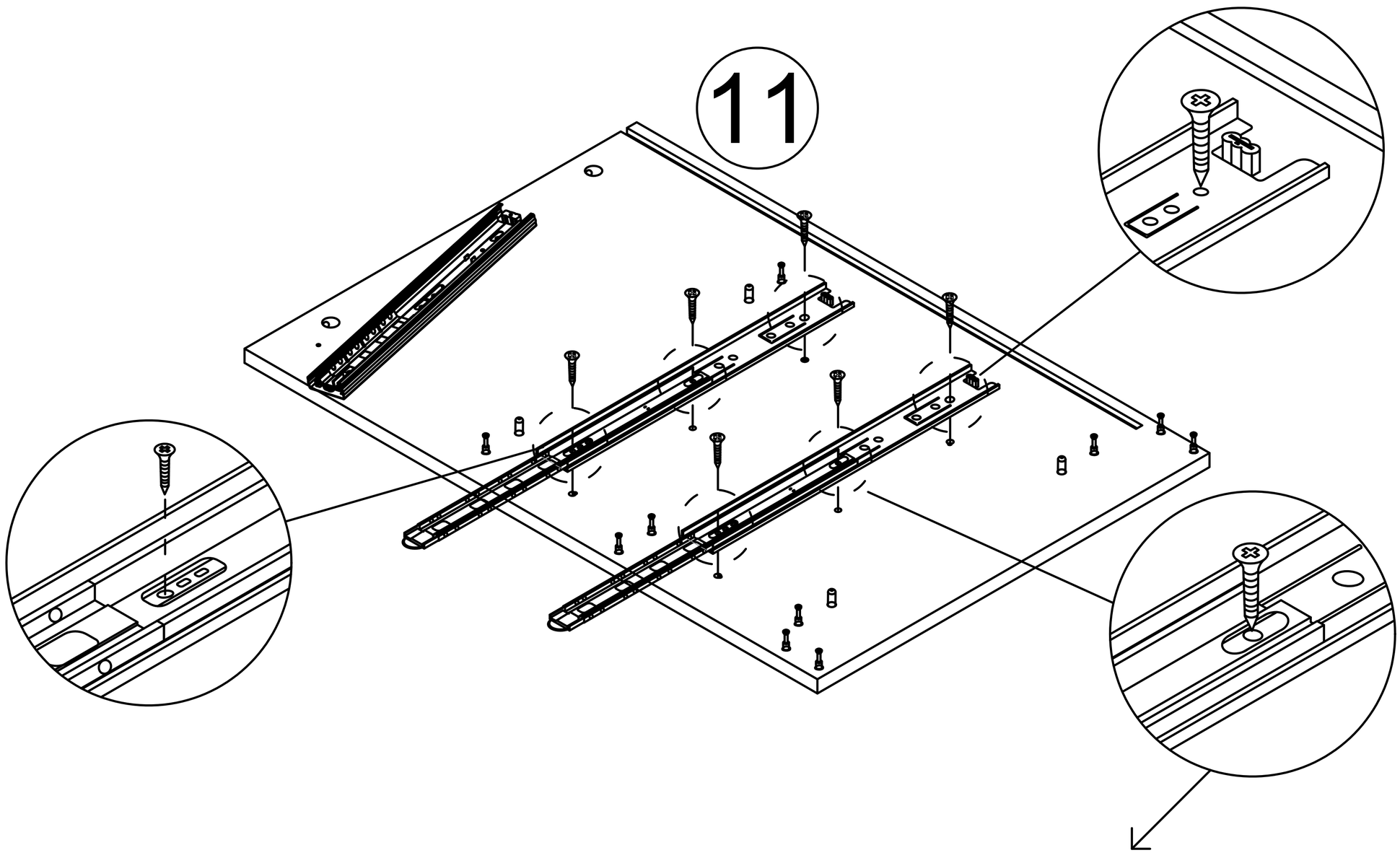

This hole is for strengthening fixed hole customers
can choose to install according to their needs.

Step 18

B x2

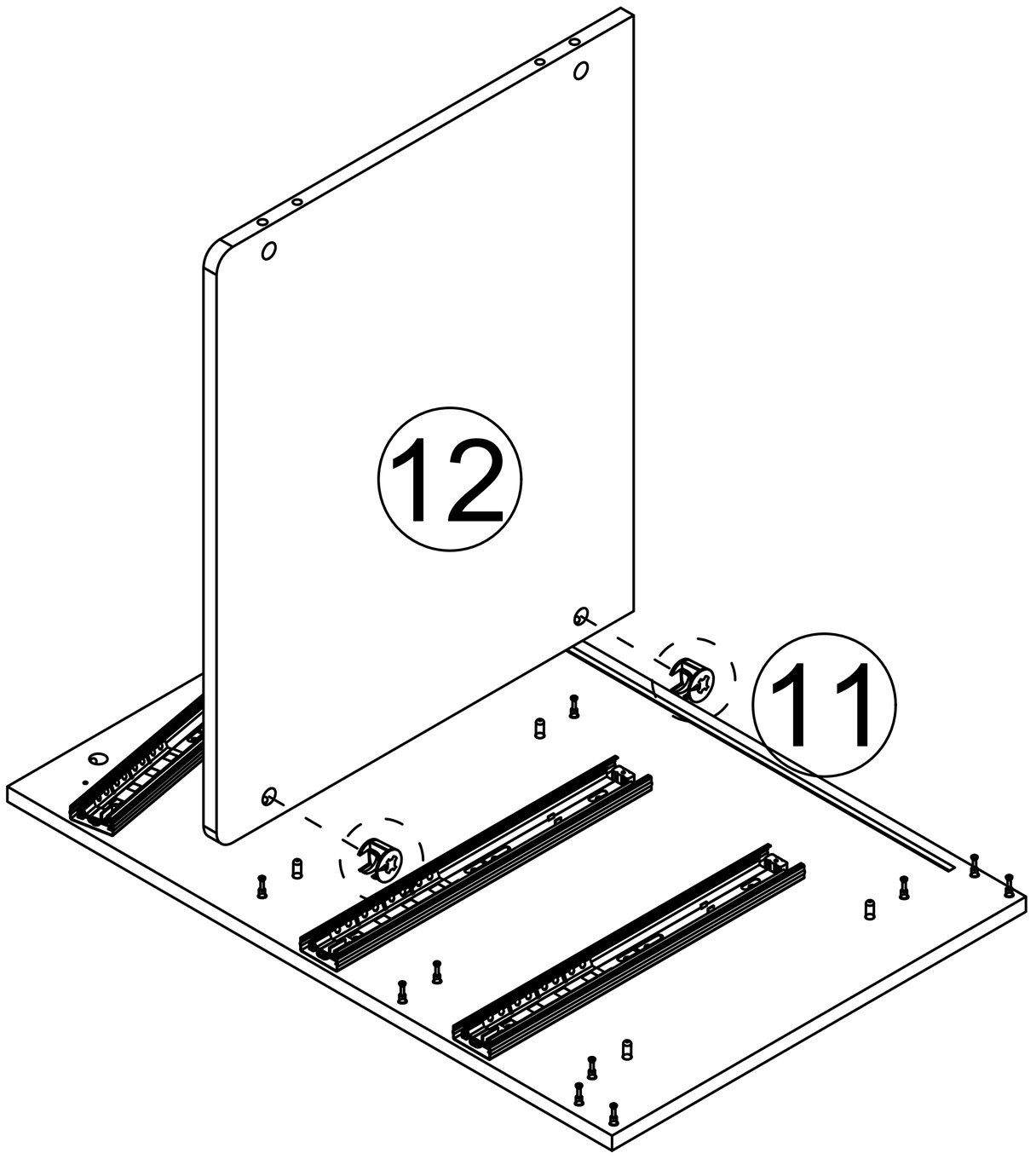

Step 19

B x2

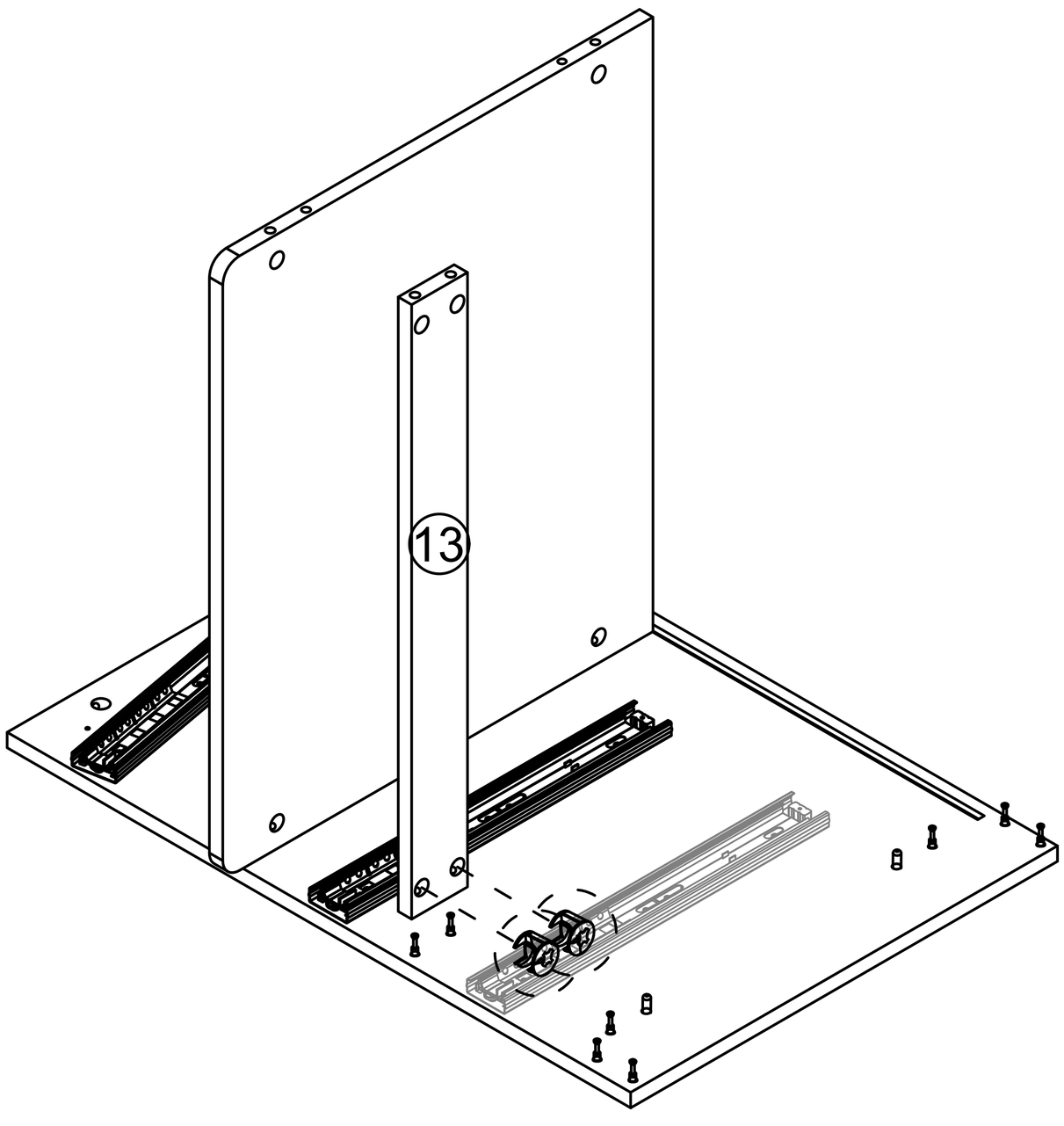

Step 20

A x4

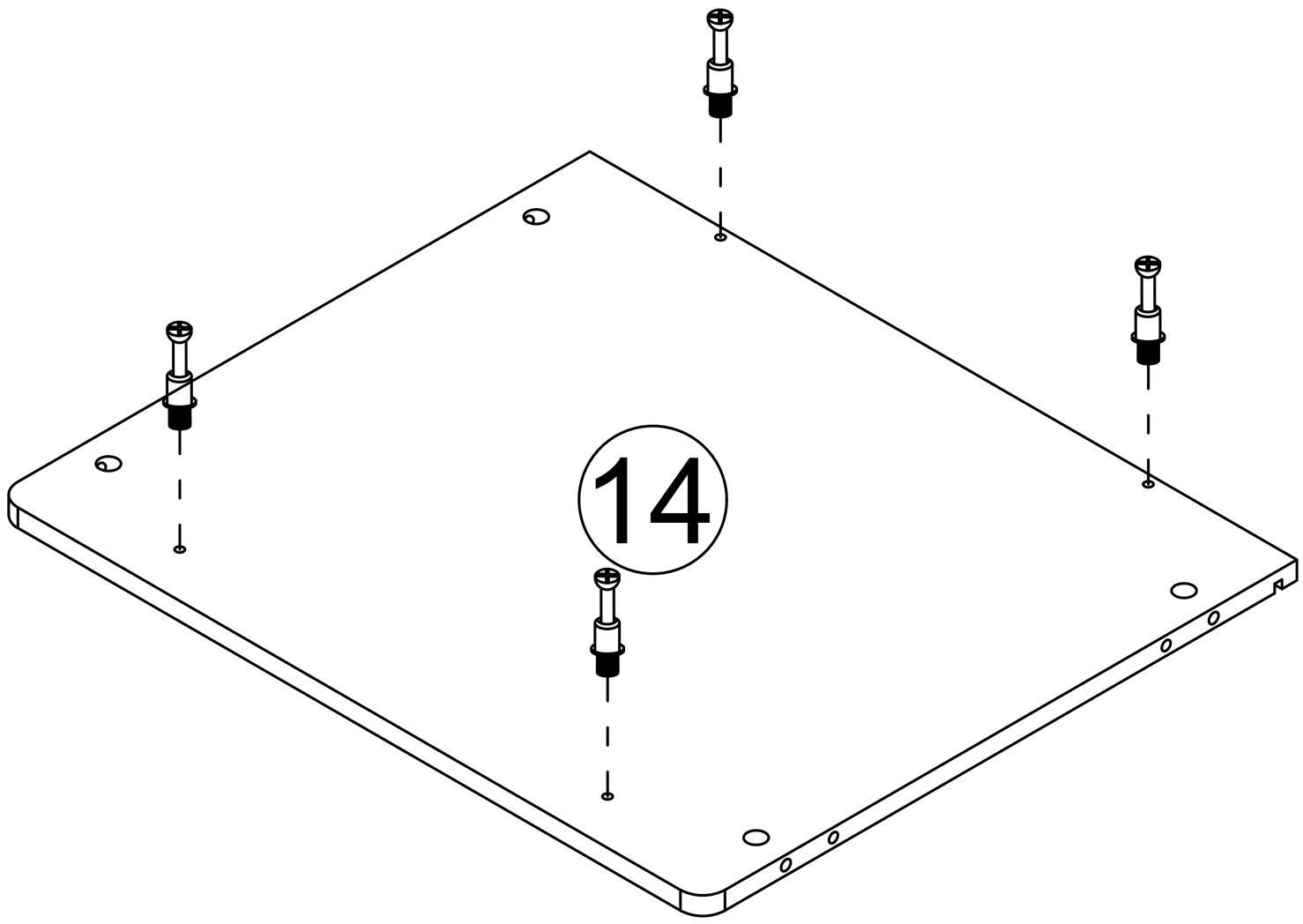

Step 21

B x4

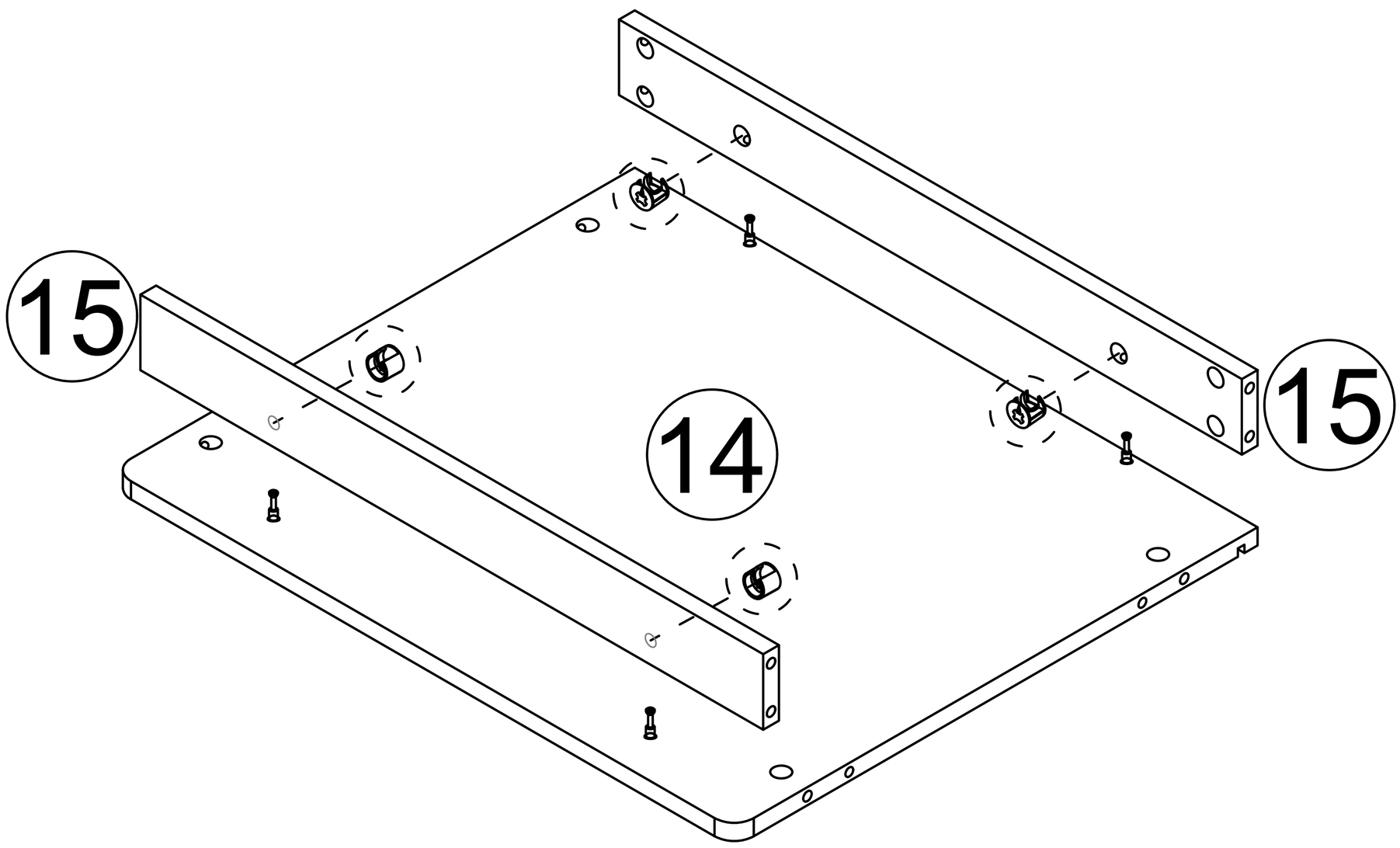

Step 22

B

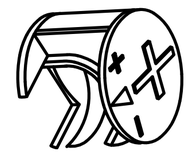

x6

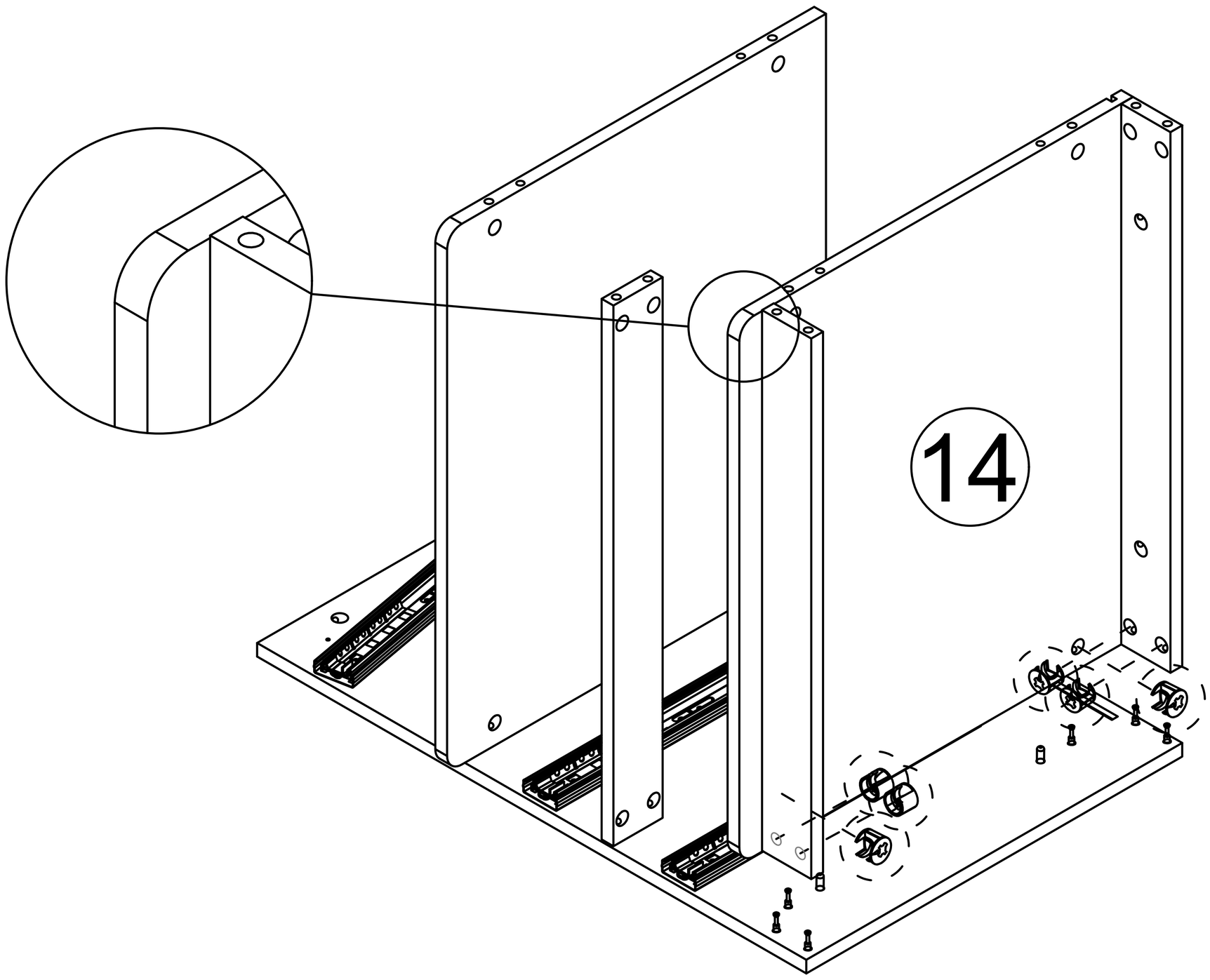

Step 23

C



x4

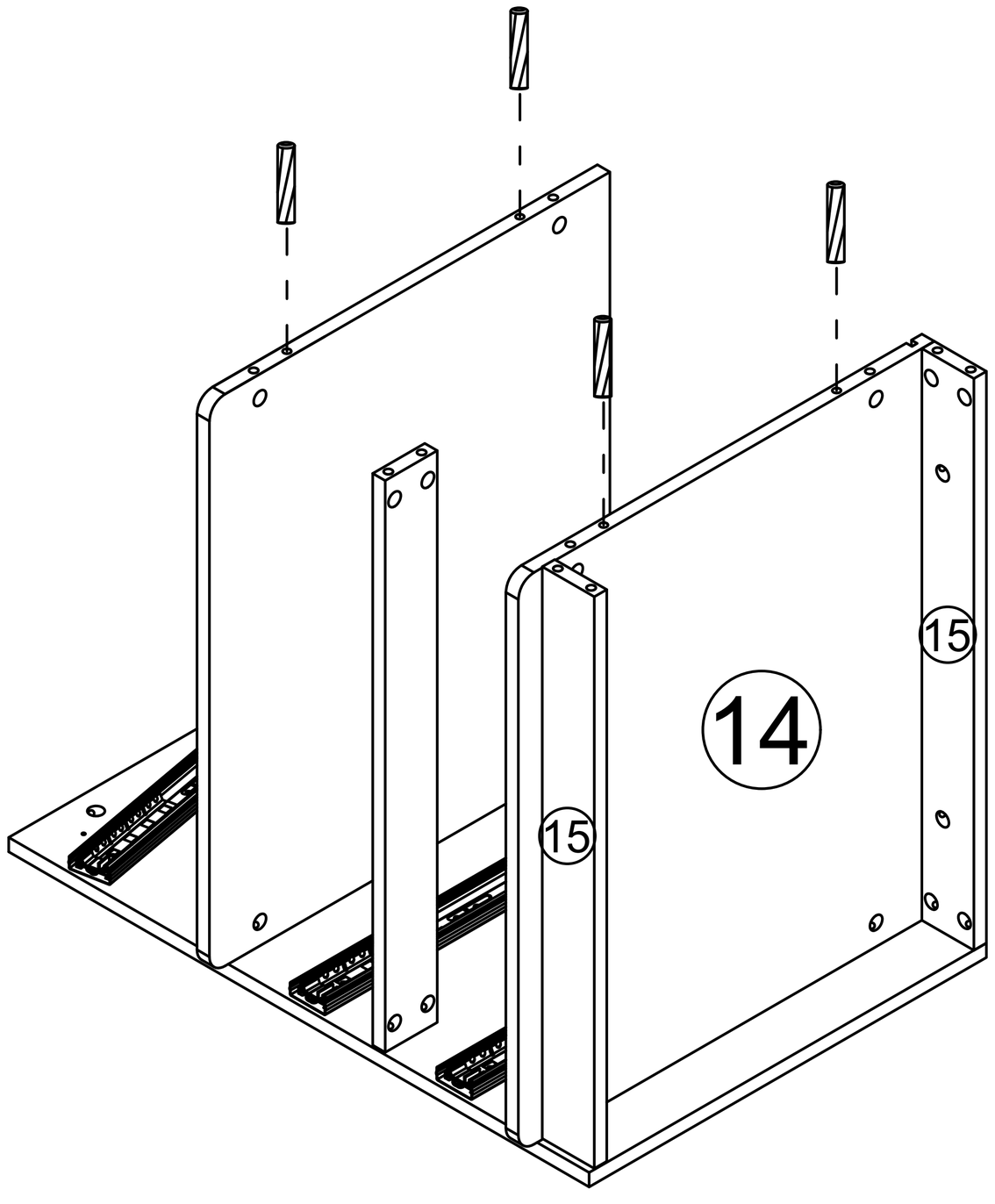

Step 24

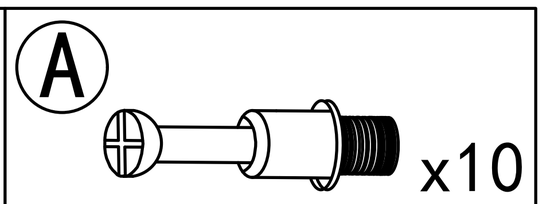

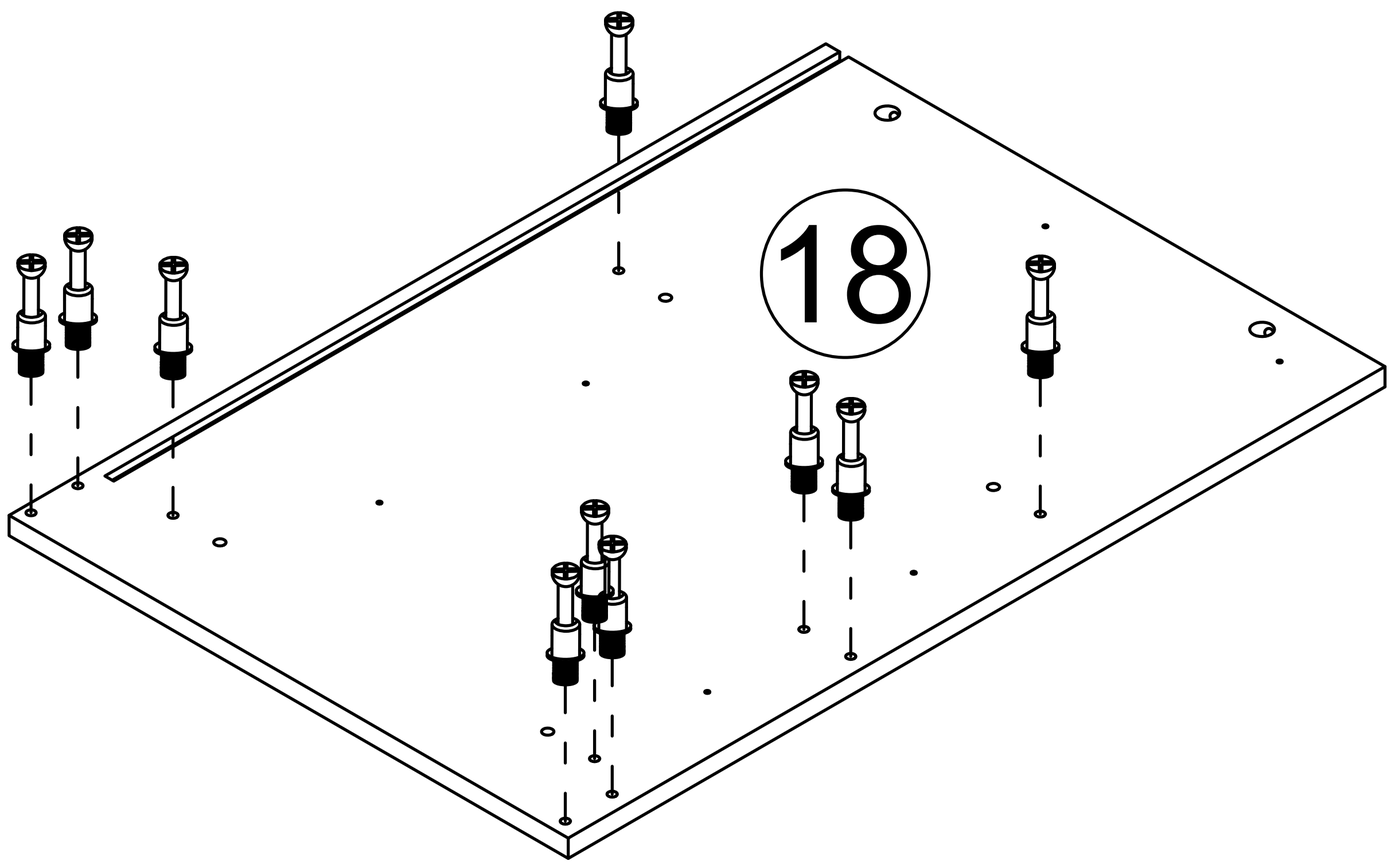

Step 25

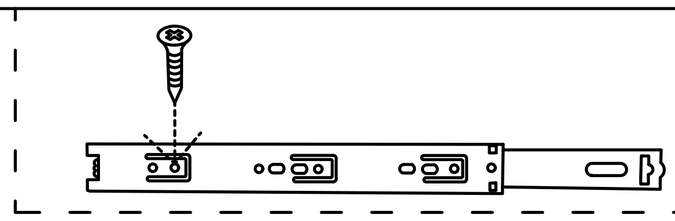

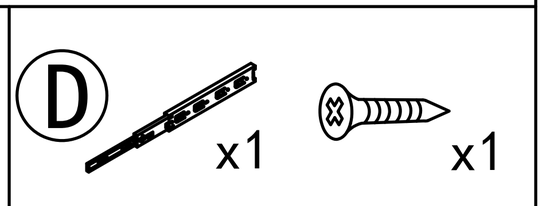

All that is needed here is to install one screw first.

Move the guide rail down a bit
do not let it block the hole

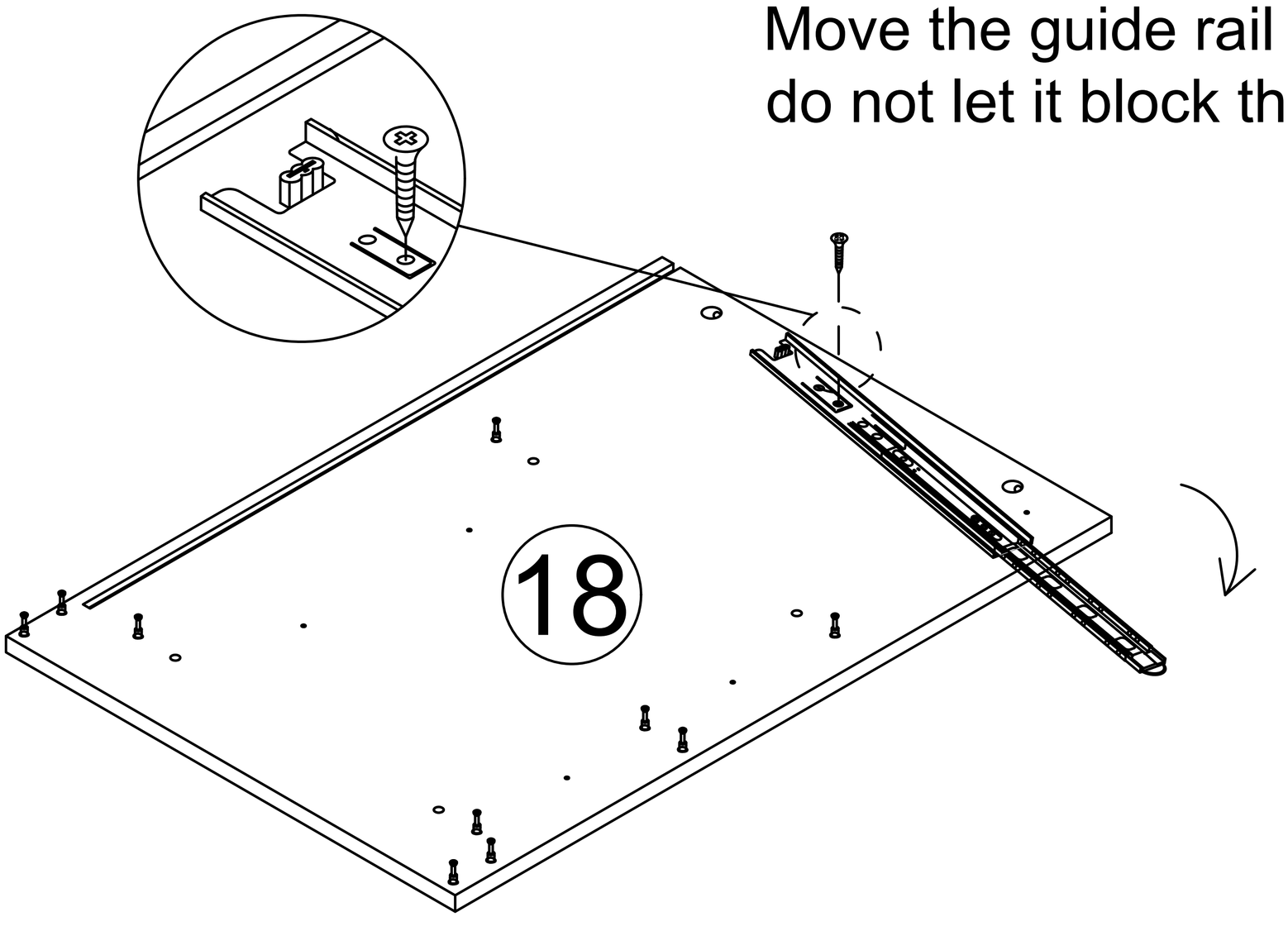

22

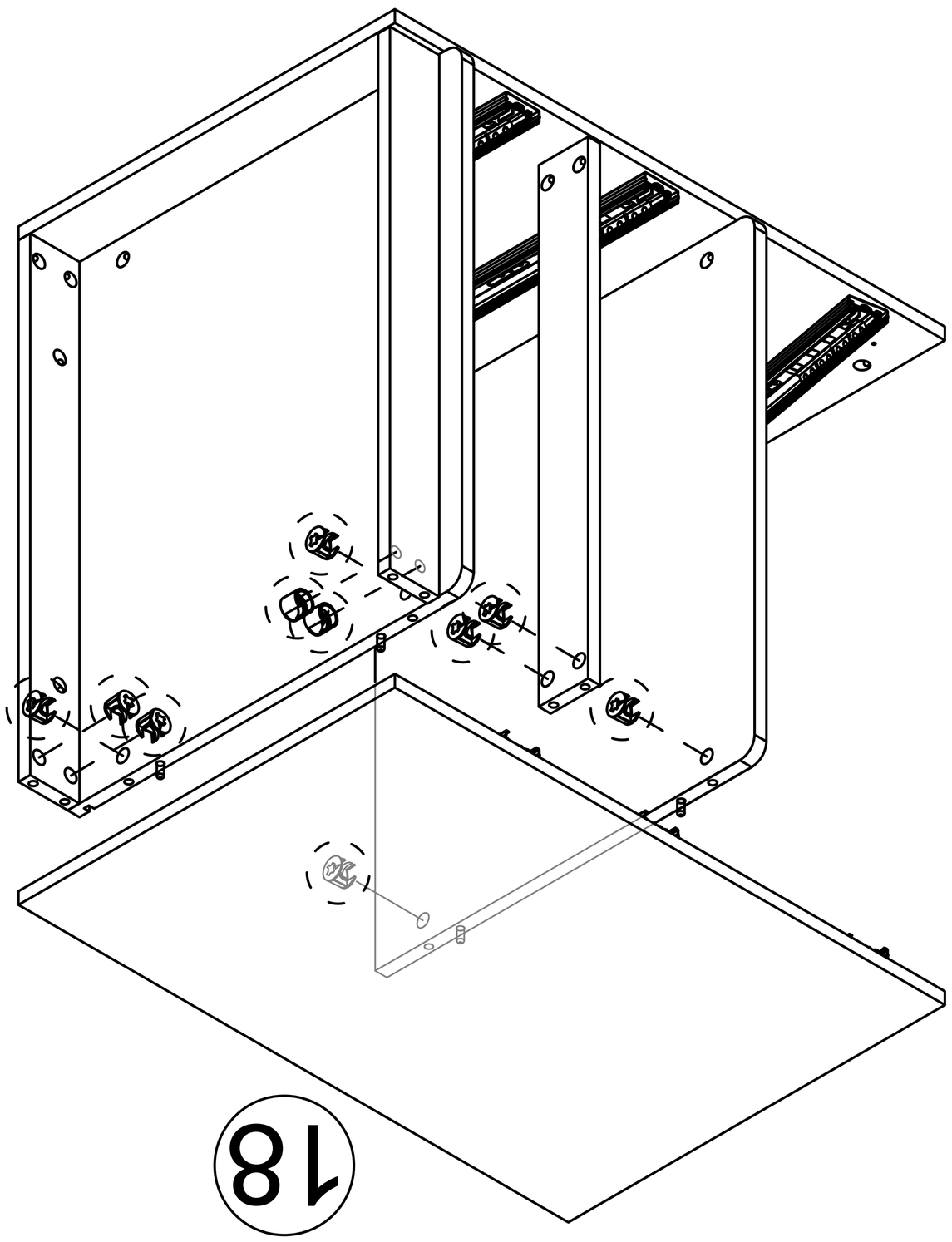

B x10

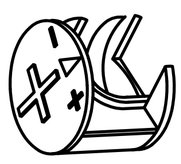

Step 27

This hole is for strengthening fixed hole customers
can choose to install according to their needs.

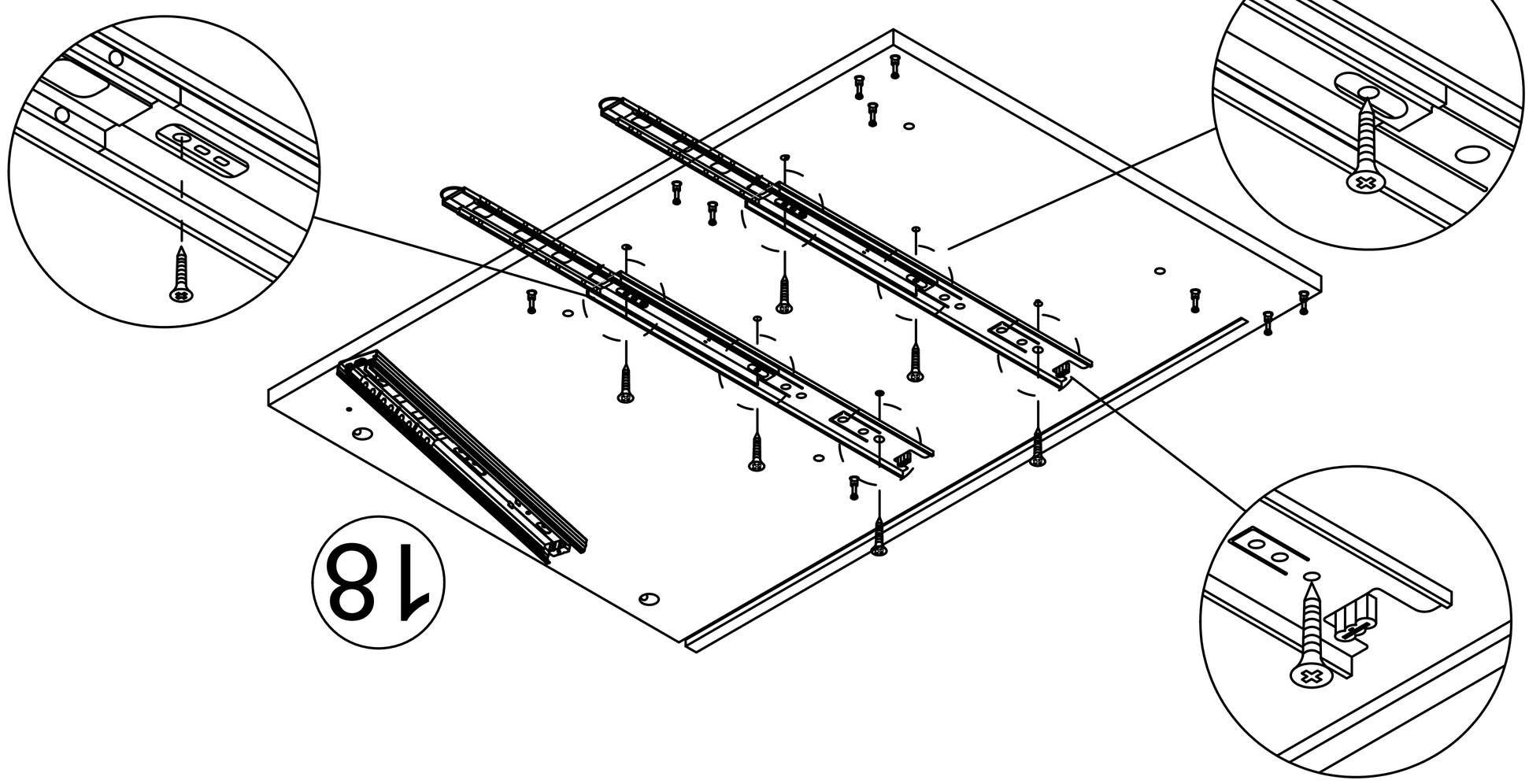

E x2 x6

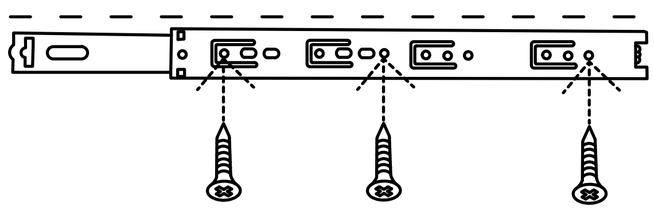

Step 26

Step 28

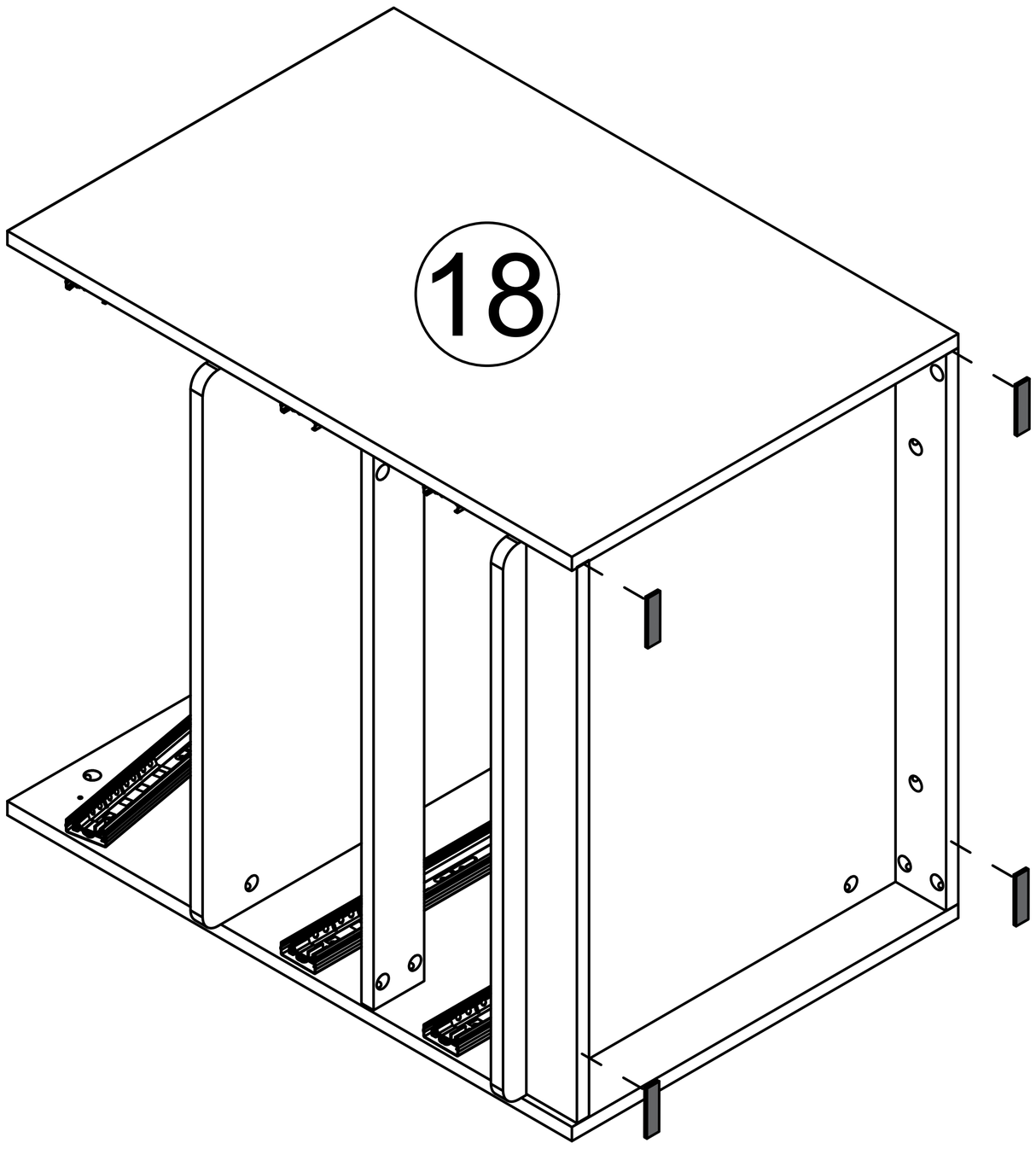

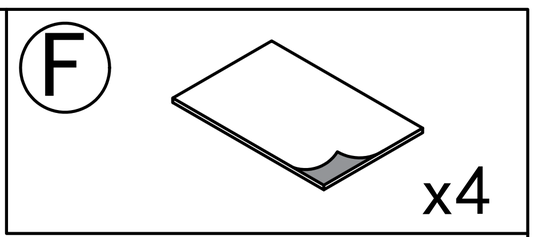

Tear off release paper and stick the black foot pad on the board

Step 29

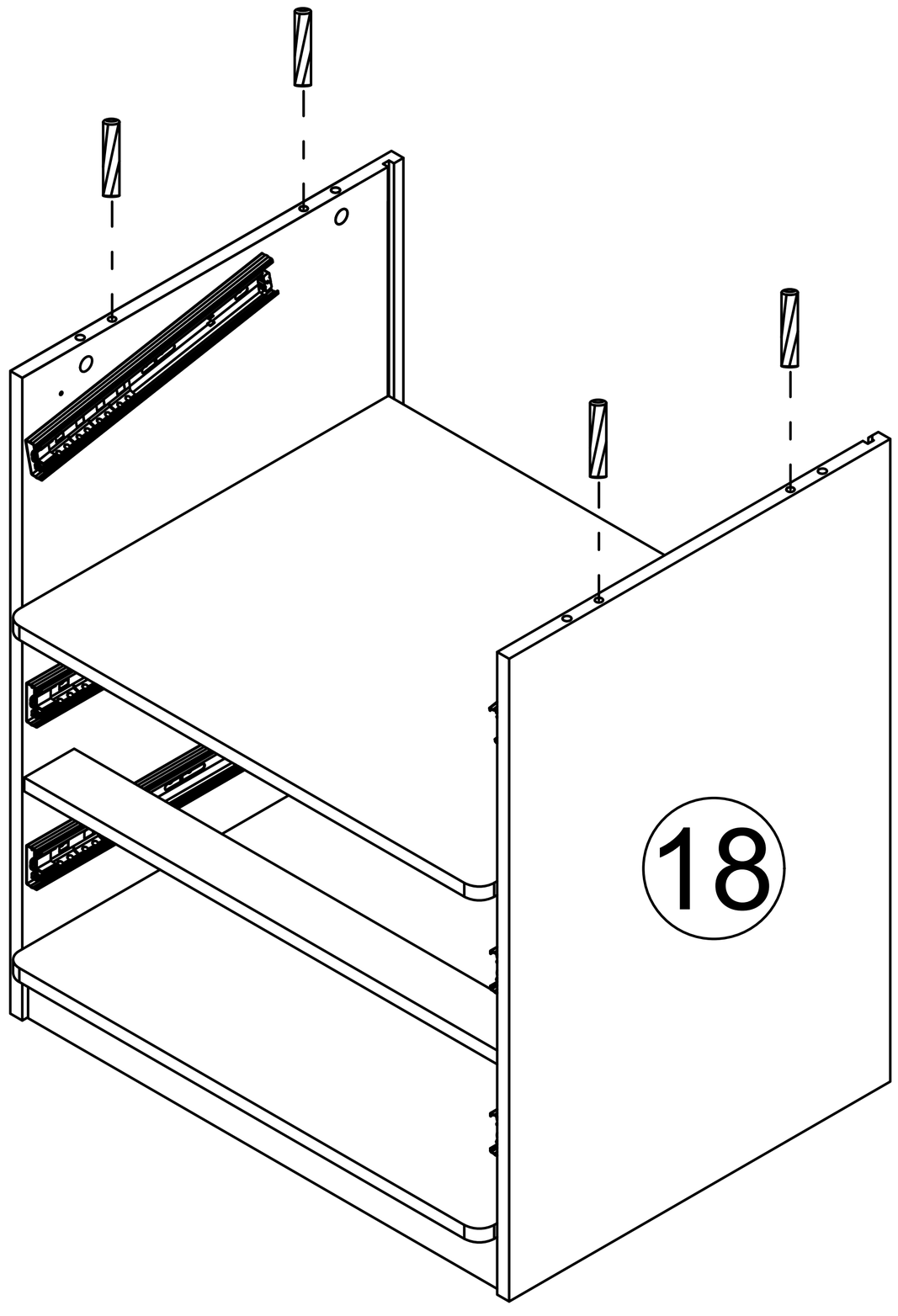

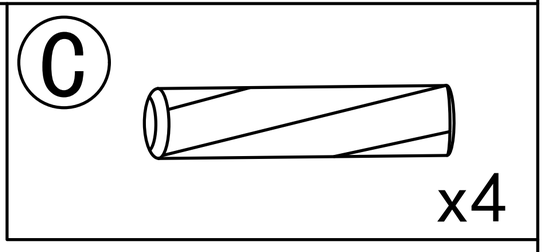

Step 30

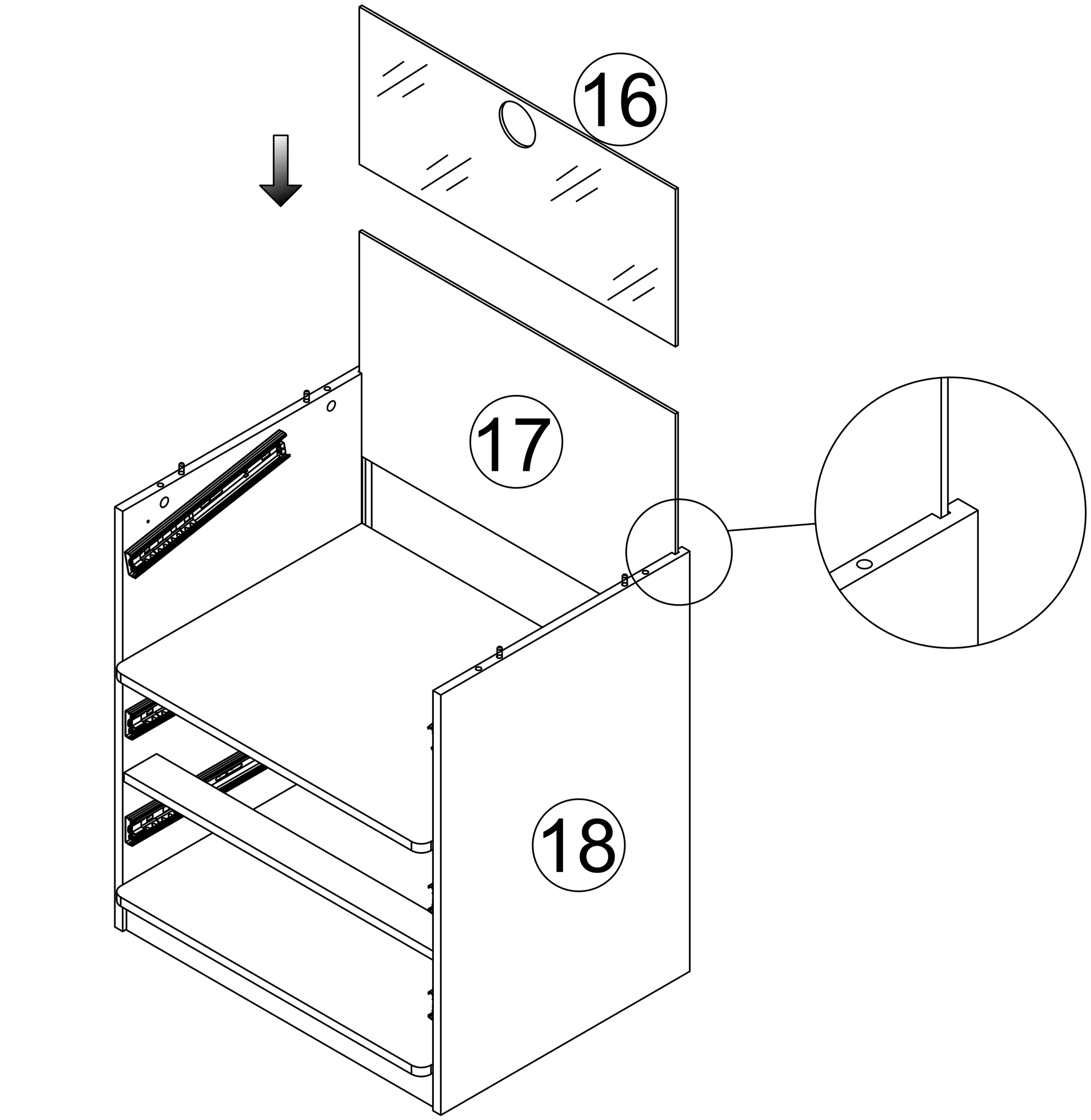

Step 31

A x4

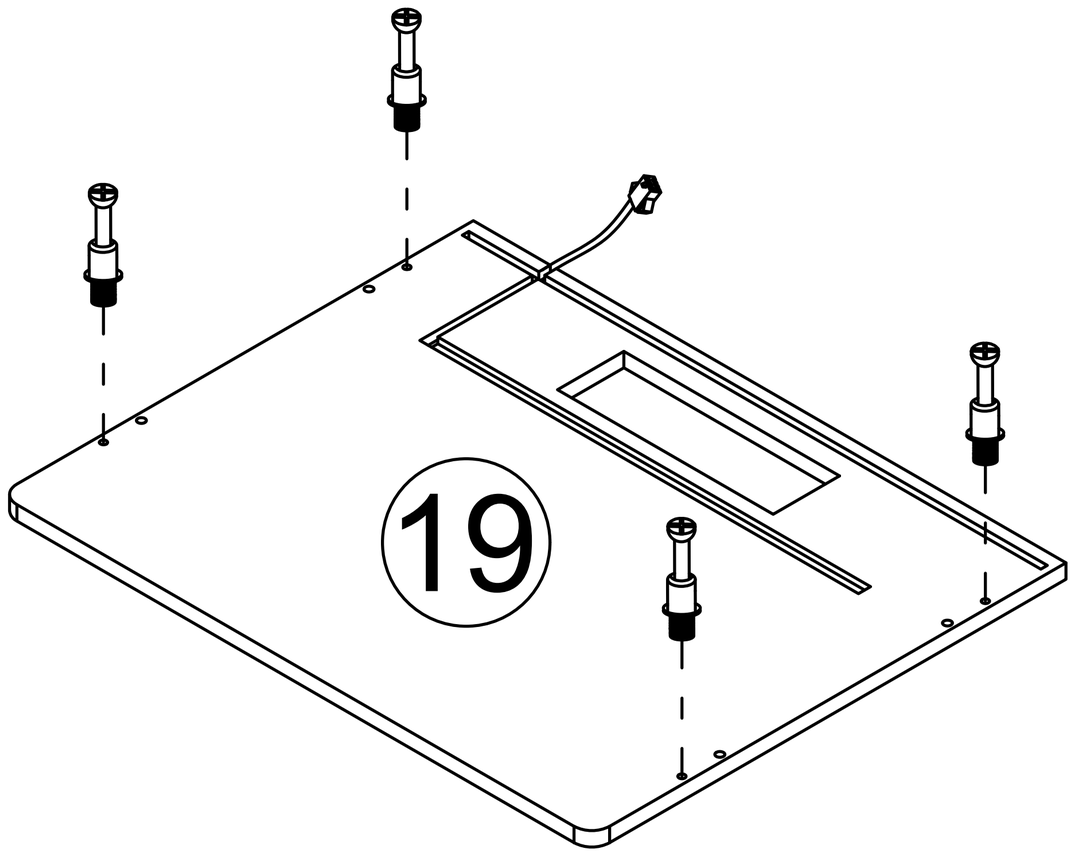

Step 32

B x4

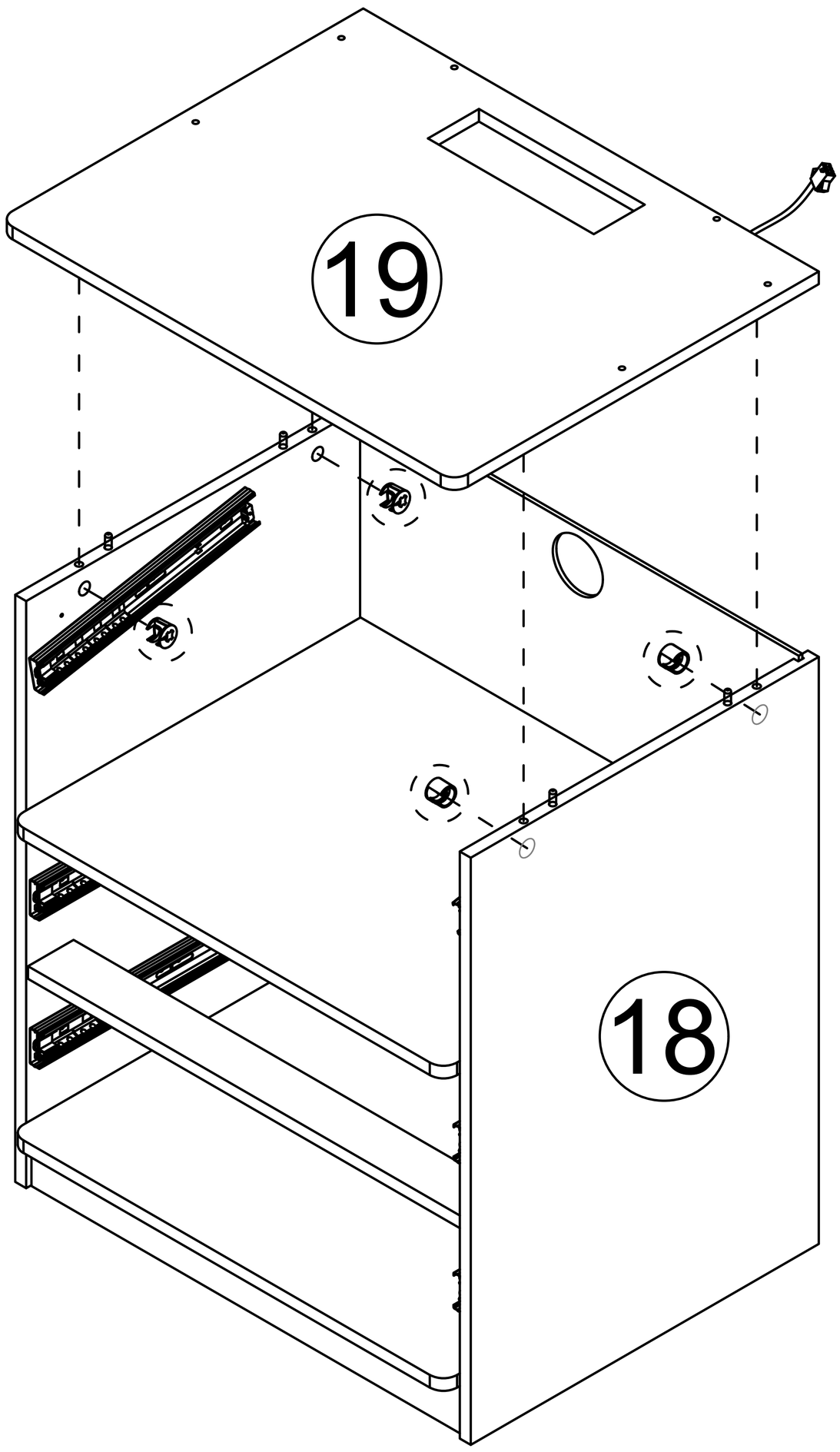

Step 33

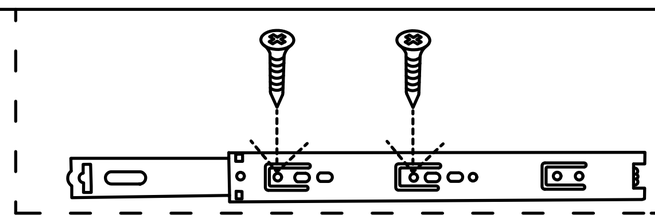

D x2

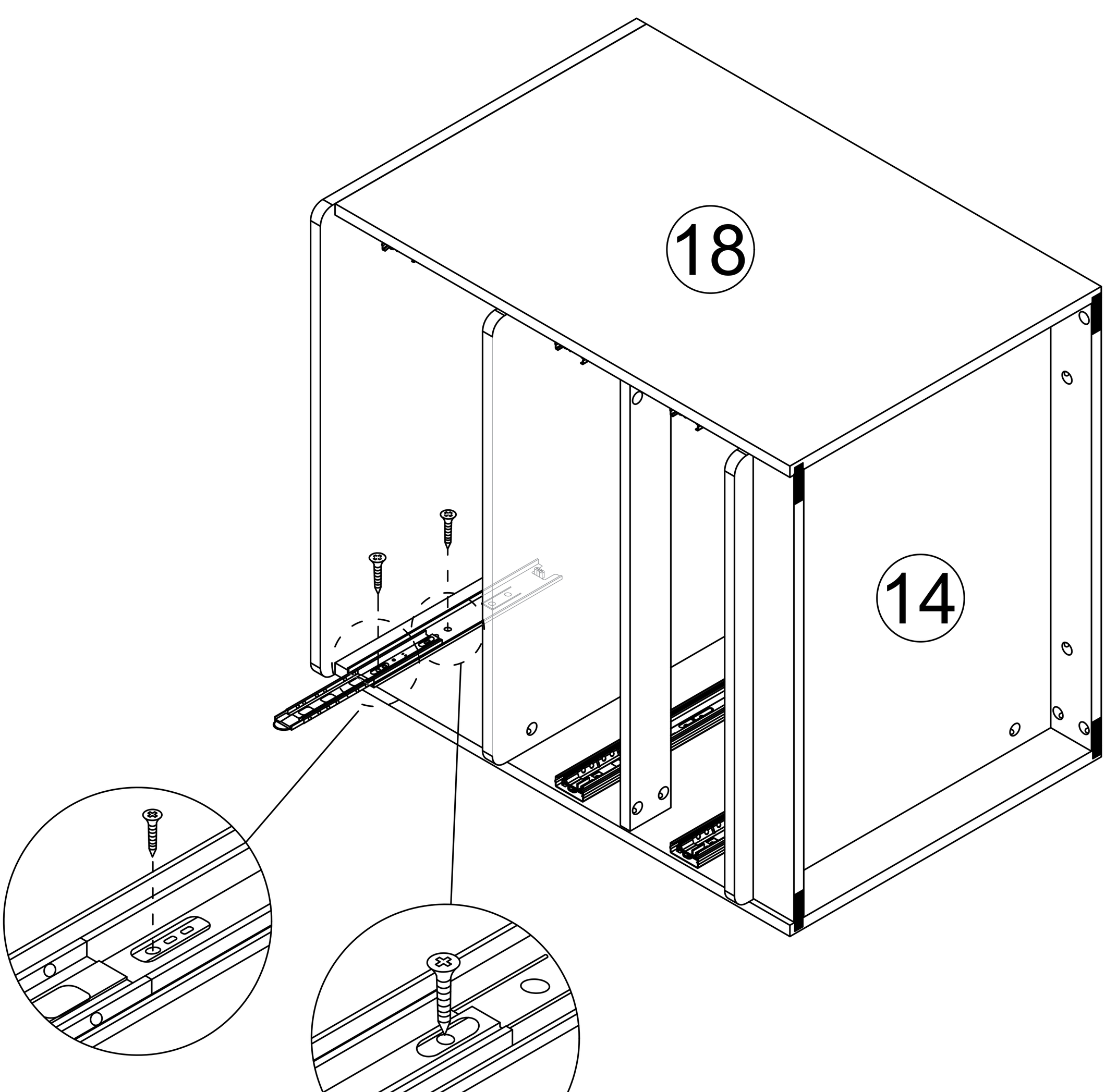

This hole is for strengthening fixed hole customers can choose to install according to their needs.

Step 34

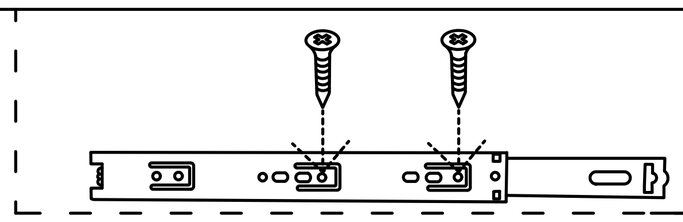

D x2

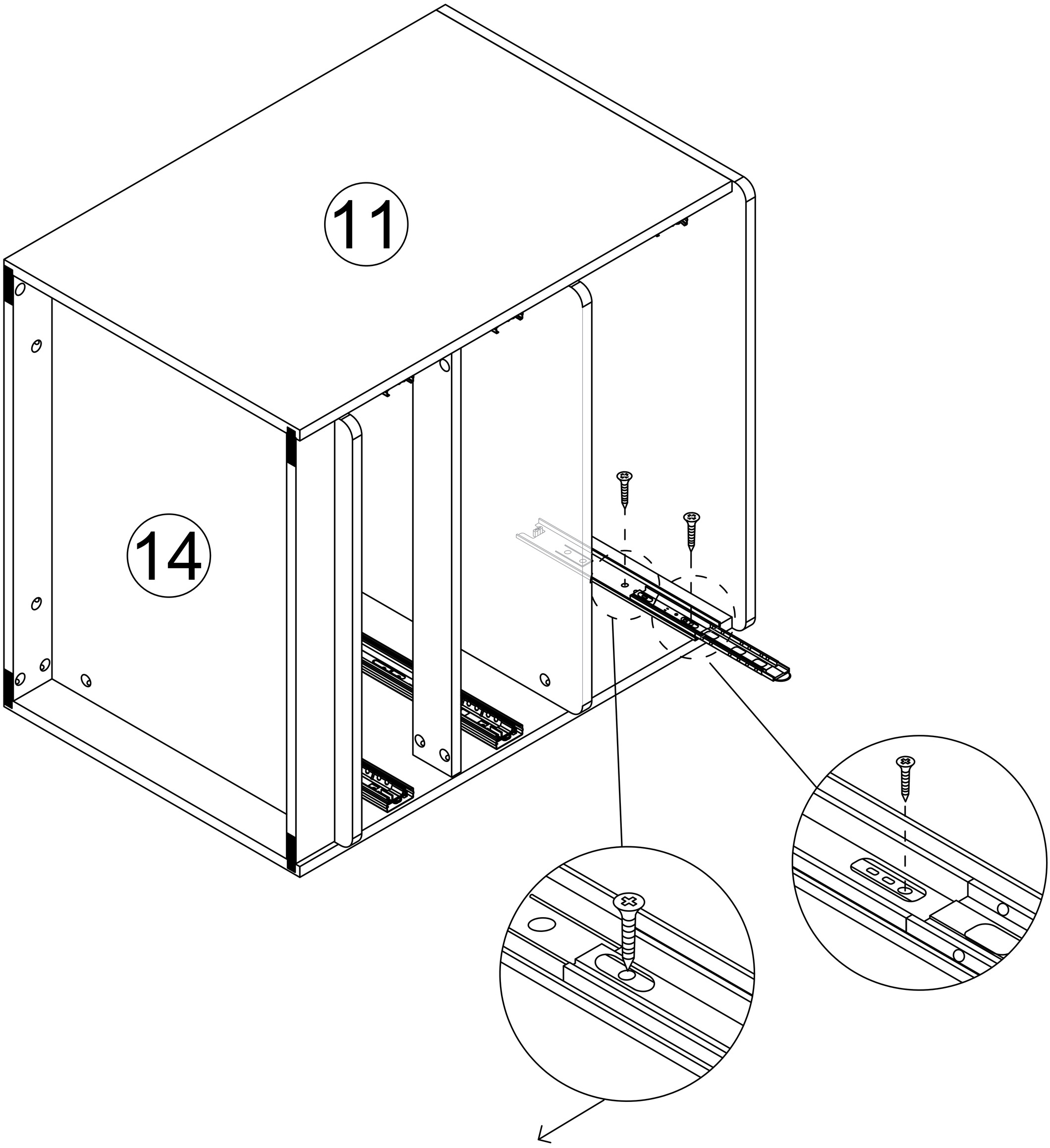

This hole is for strengthening fixed hole customers can choose to install according to their needs.

Step 35

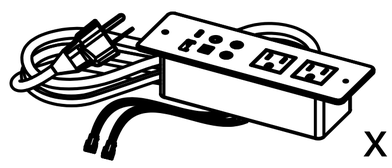
x1

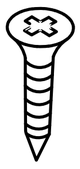
x2

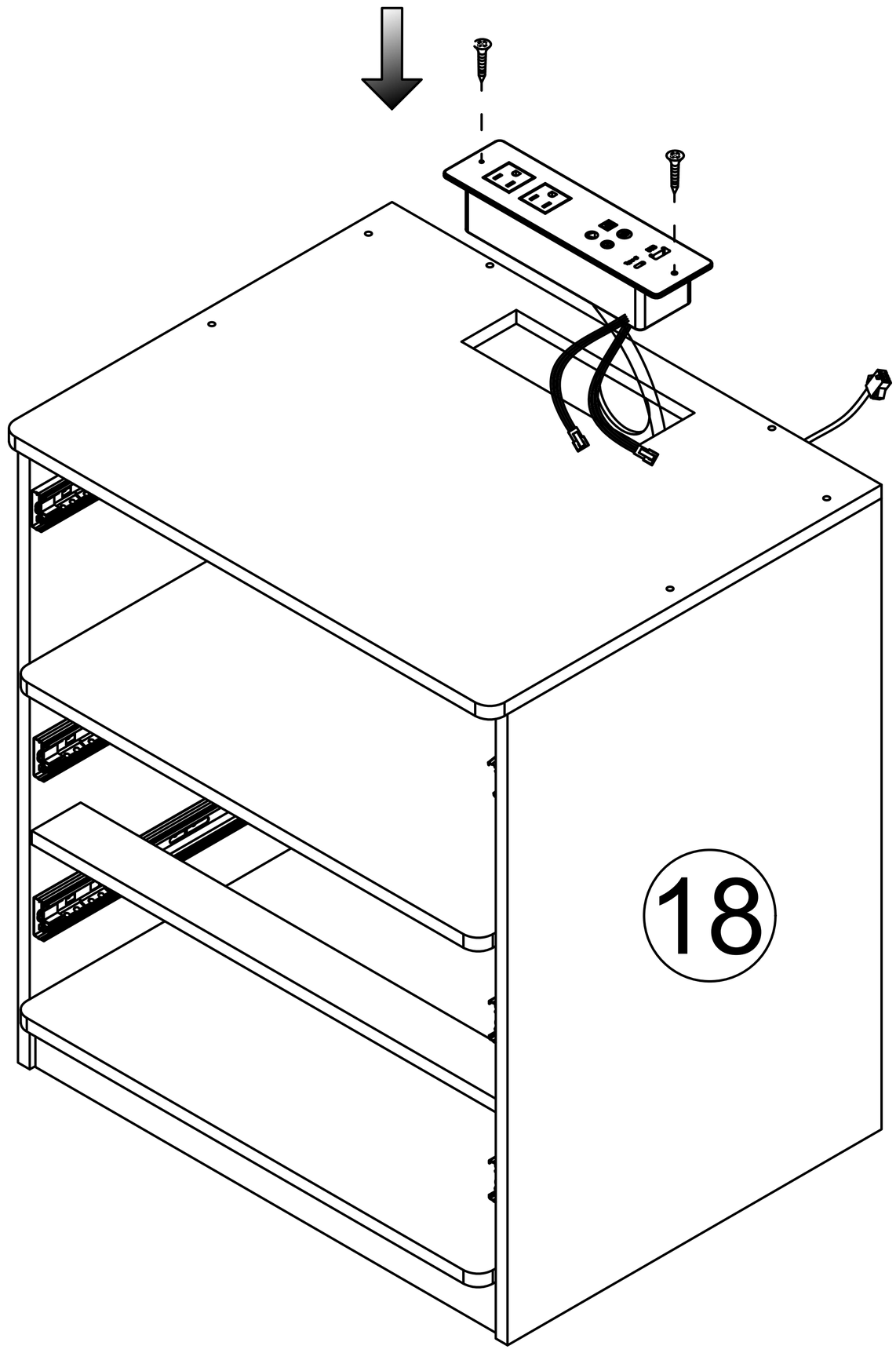

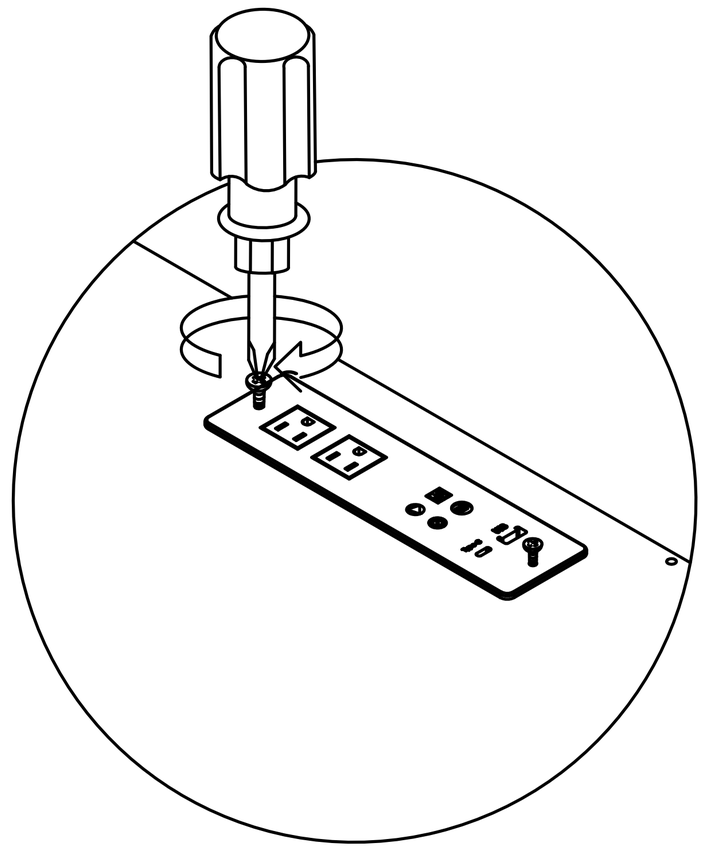

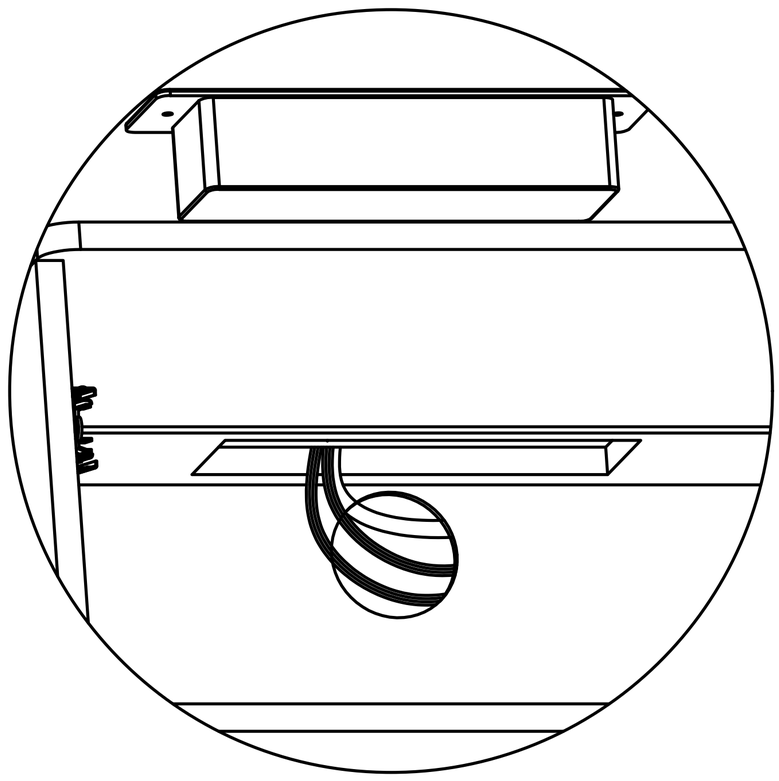

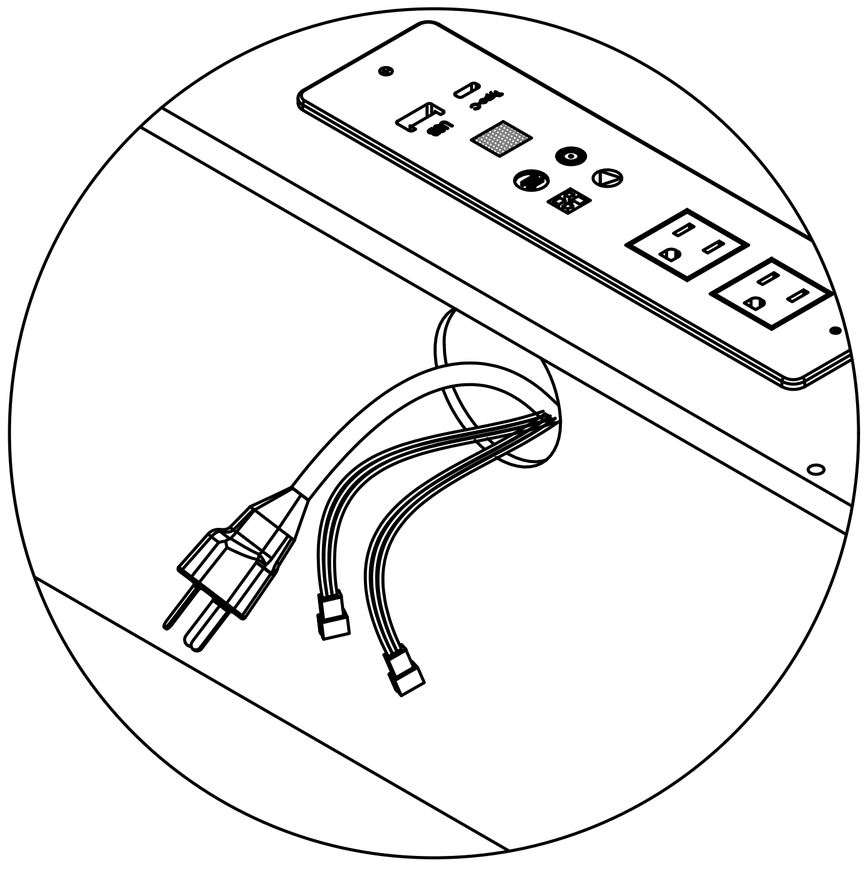

The wire exits through the back panel hole.

Step 36

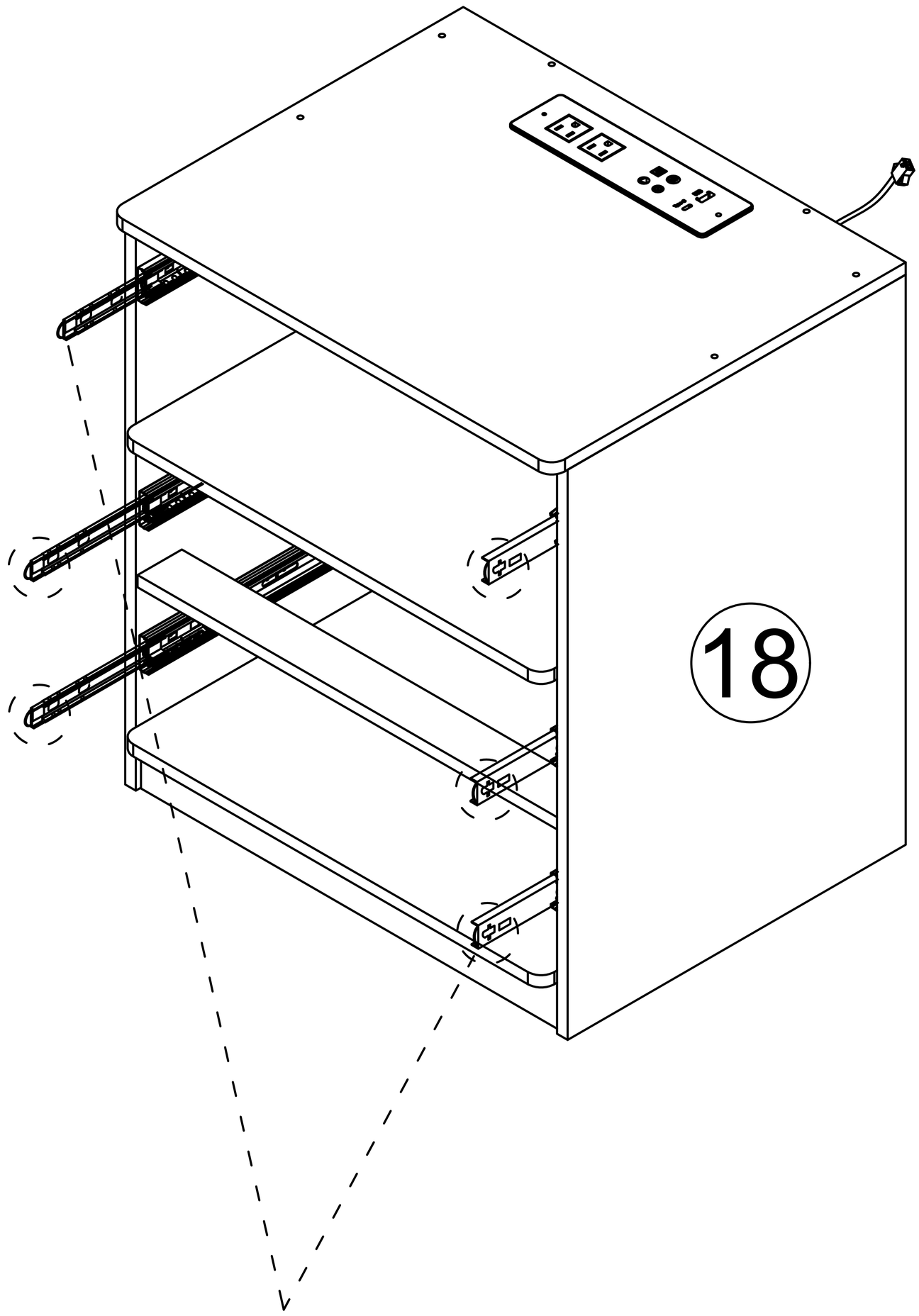

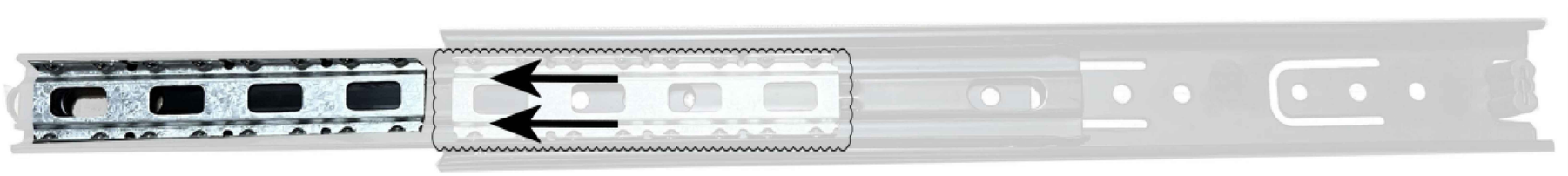

As shown，When installing the drawer,
pull the guide rail out first, Slide beads are also pulled out.

Step 37

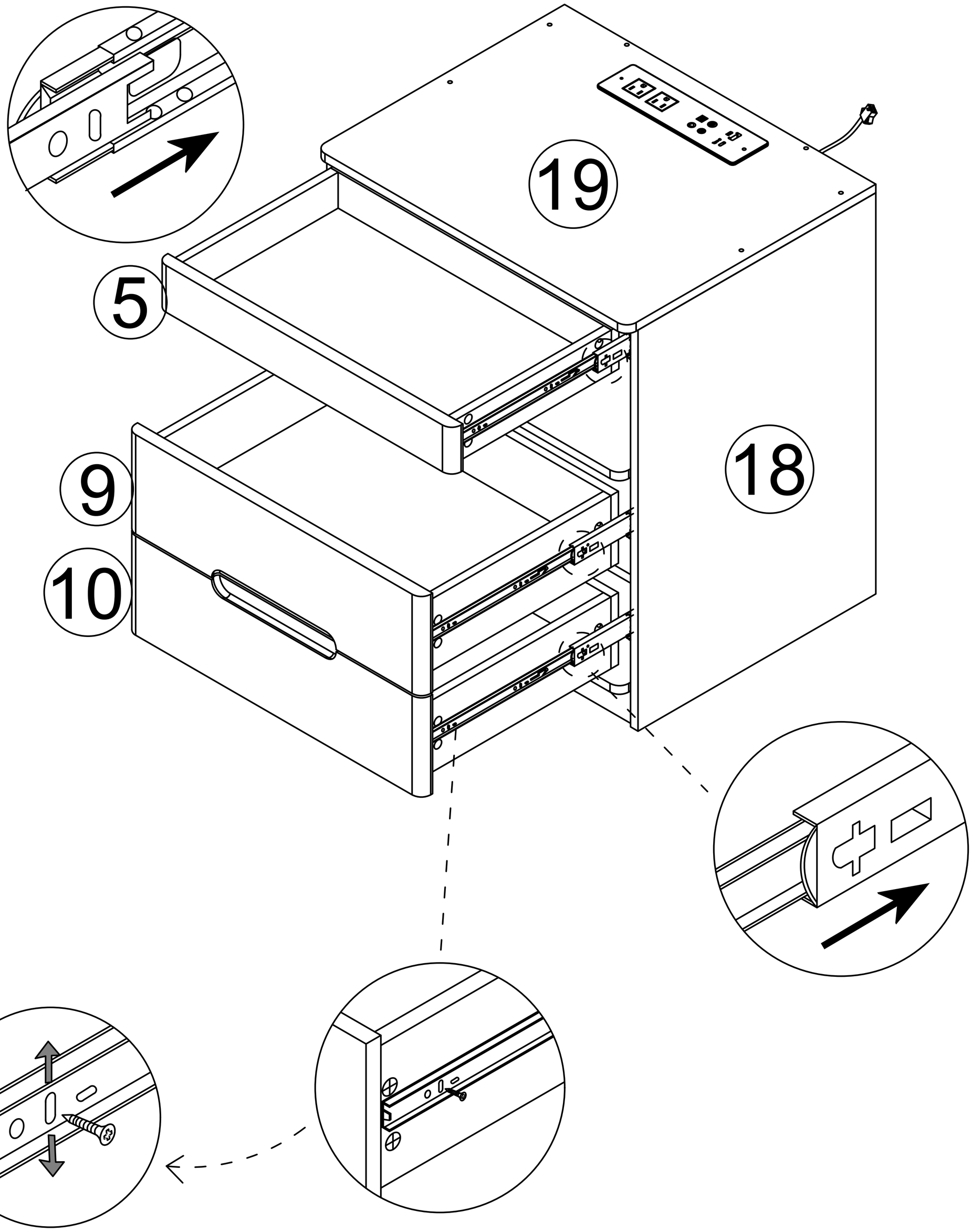

If a large gap is found after installing the drawer the slide rail can be moved up and down to adjust the gap

Step 38

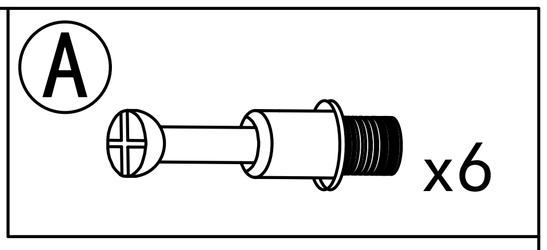

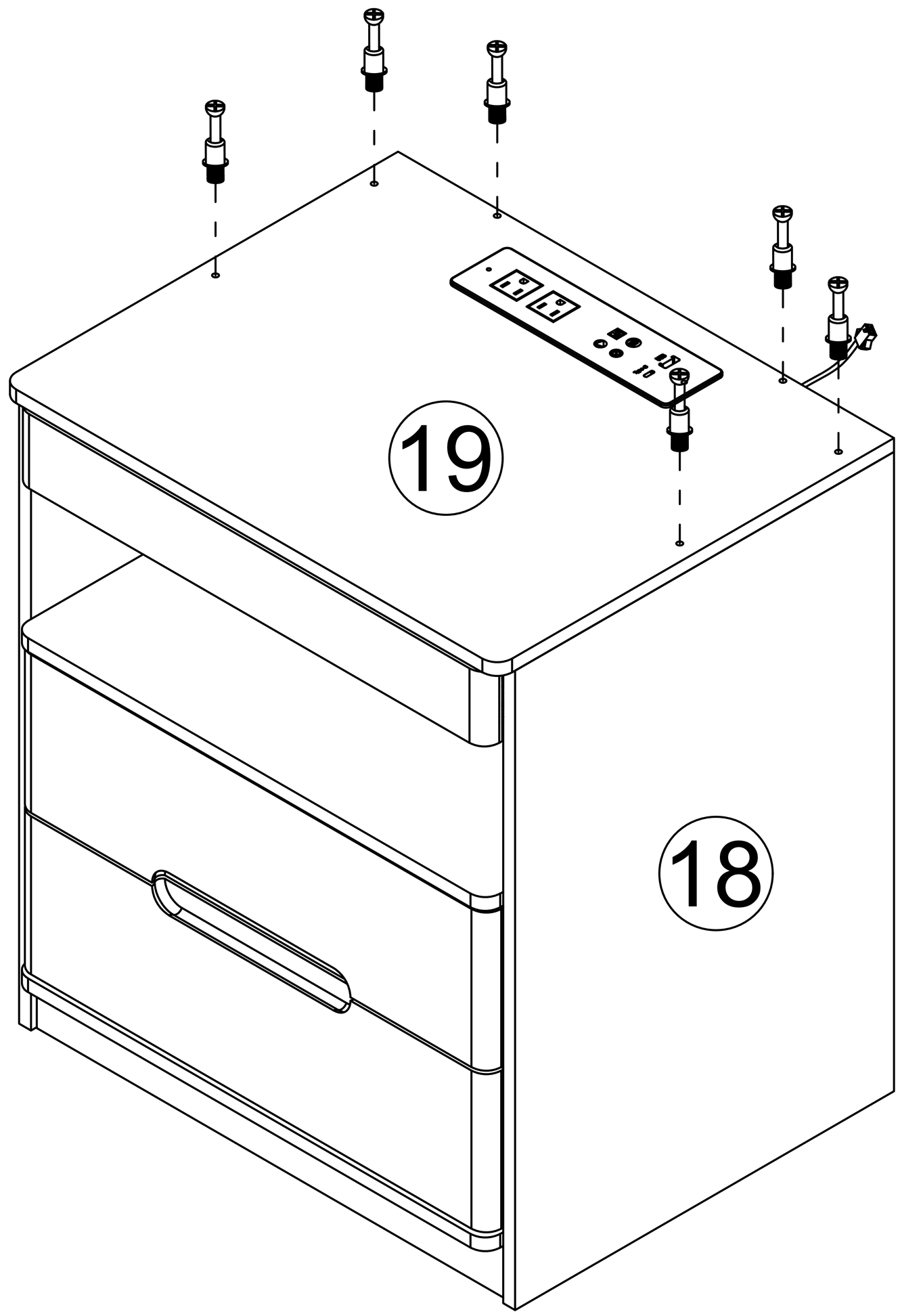

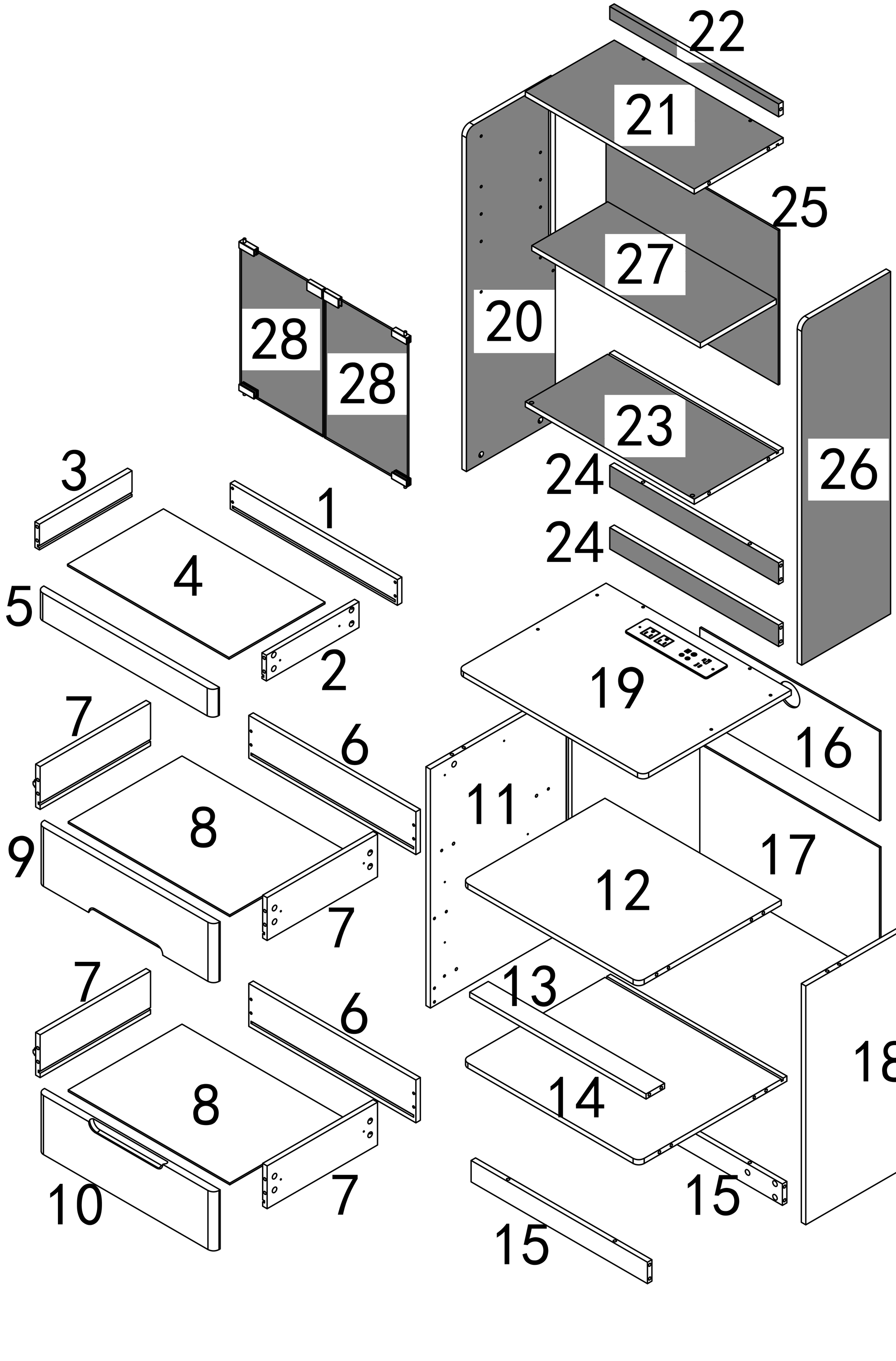
22
21
25
27
20
28
28
23
24
24
26
3
1
4
5
2
19
7
6
16
11
8
9
7
17
12
7
6
13
8
10
7
14
15
15
18

Step 39

A x9

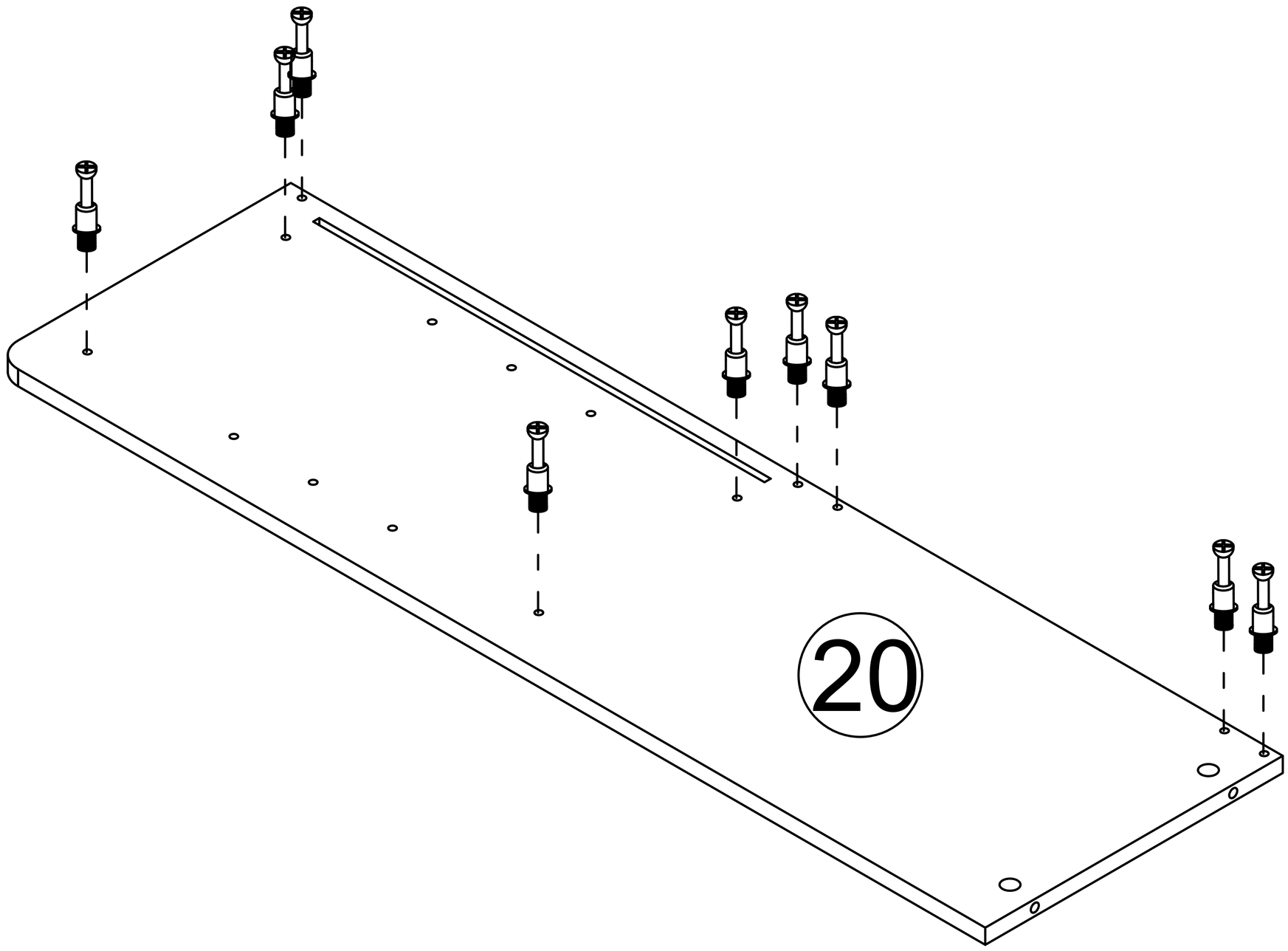

Step 40

A x2

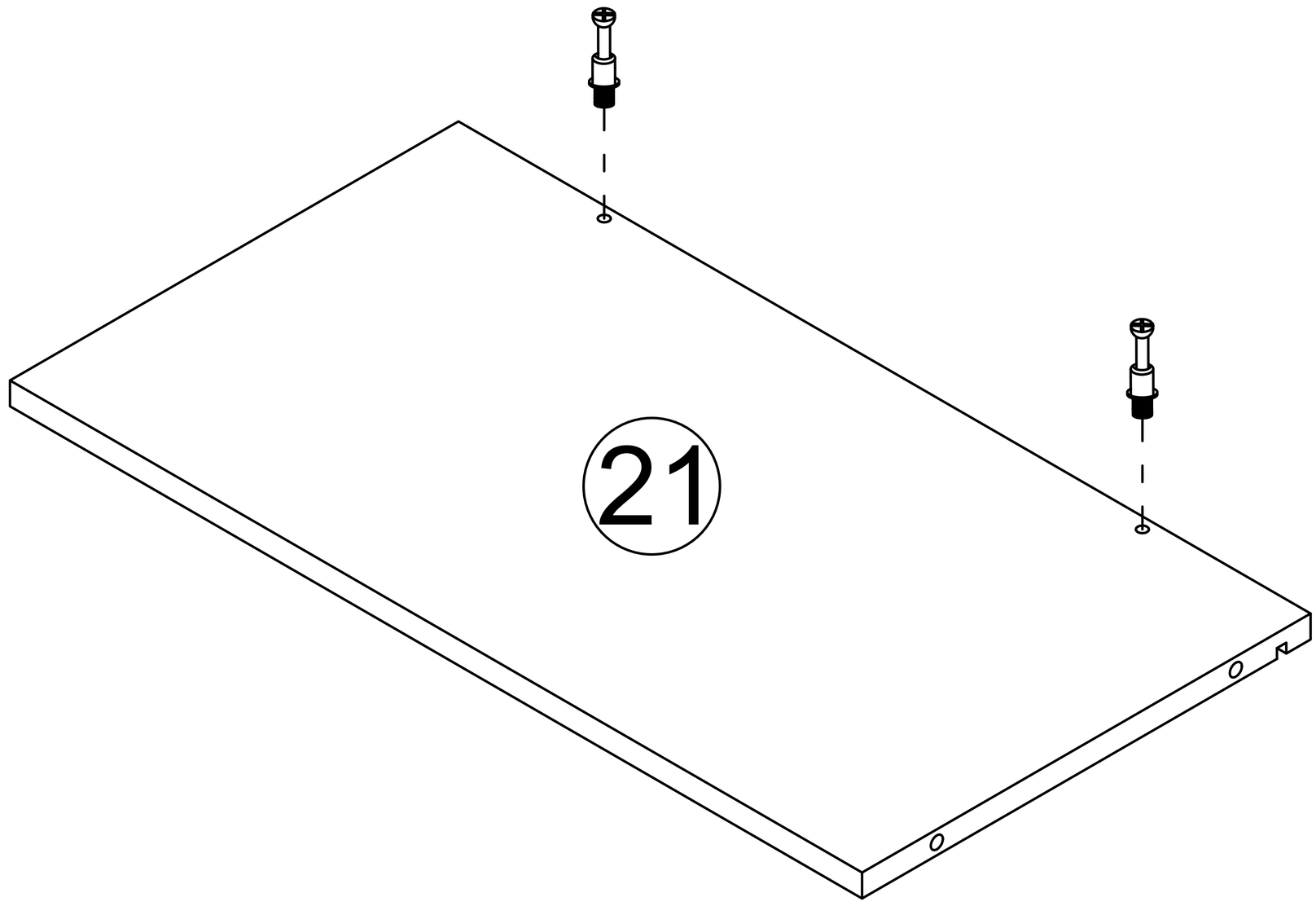

Step 41

B x2

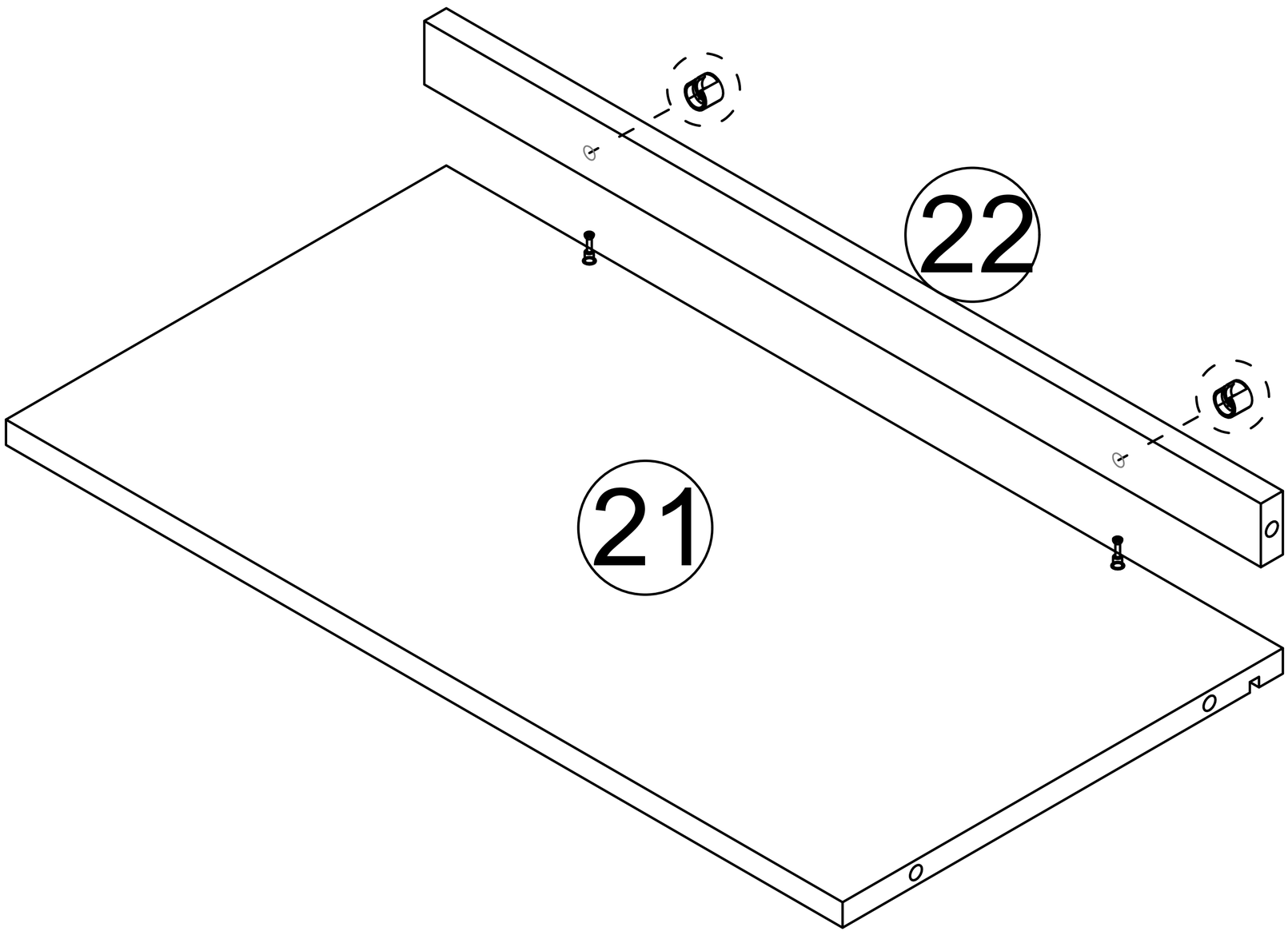

Step 42

B x3

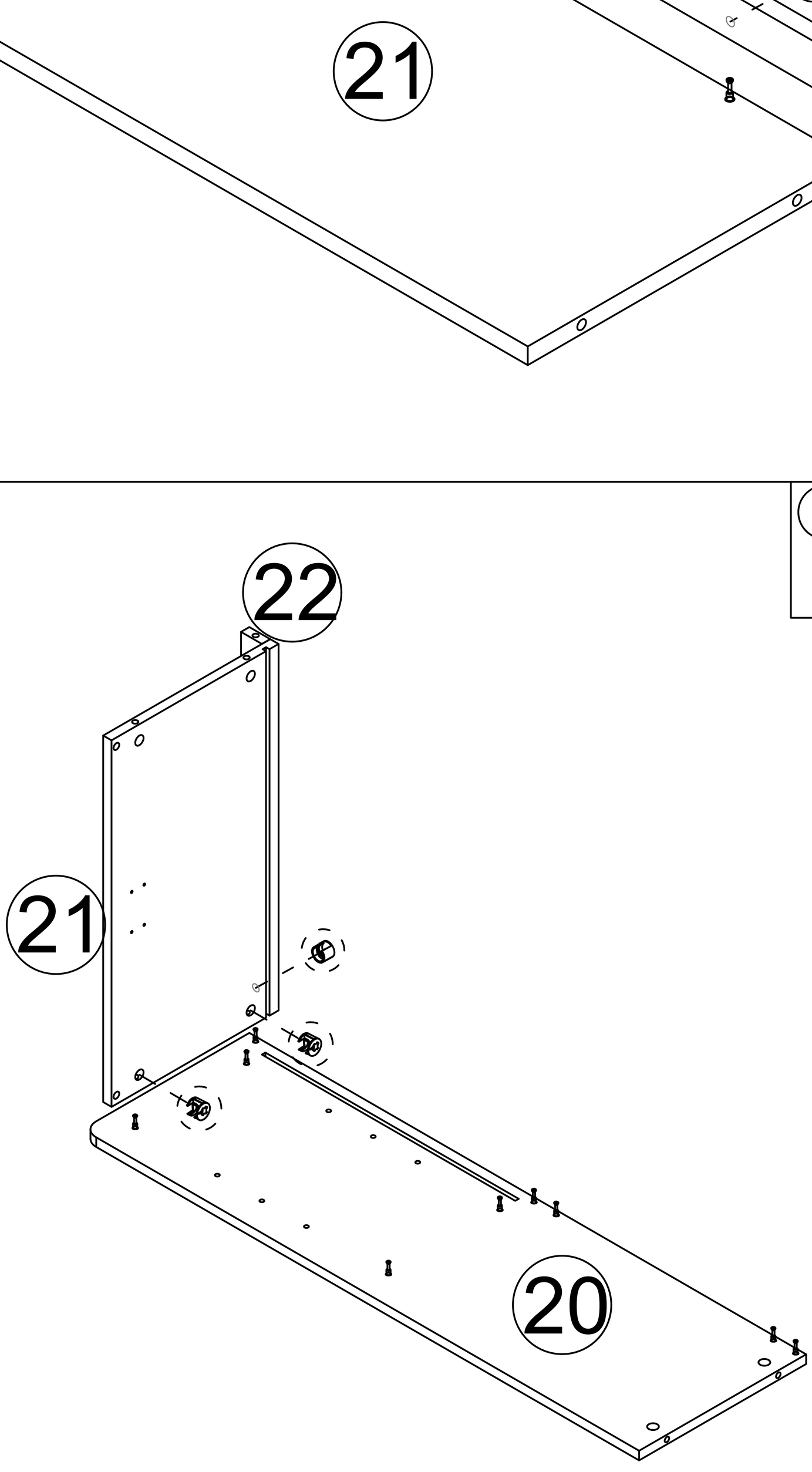

Step 43

A x2

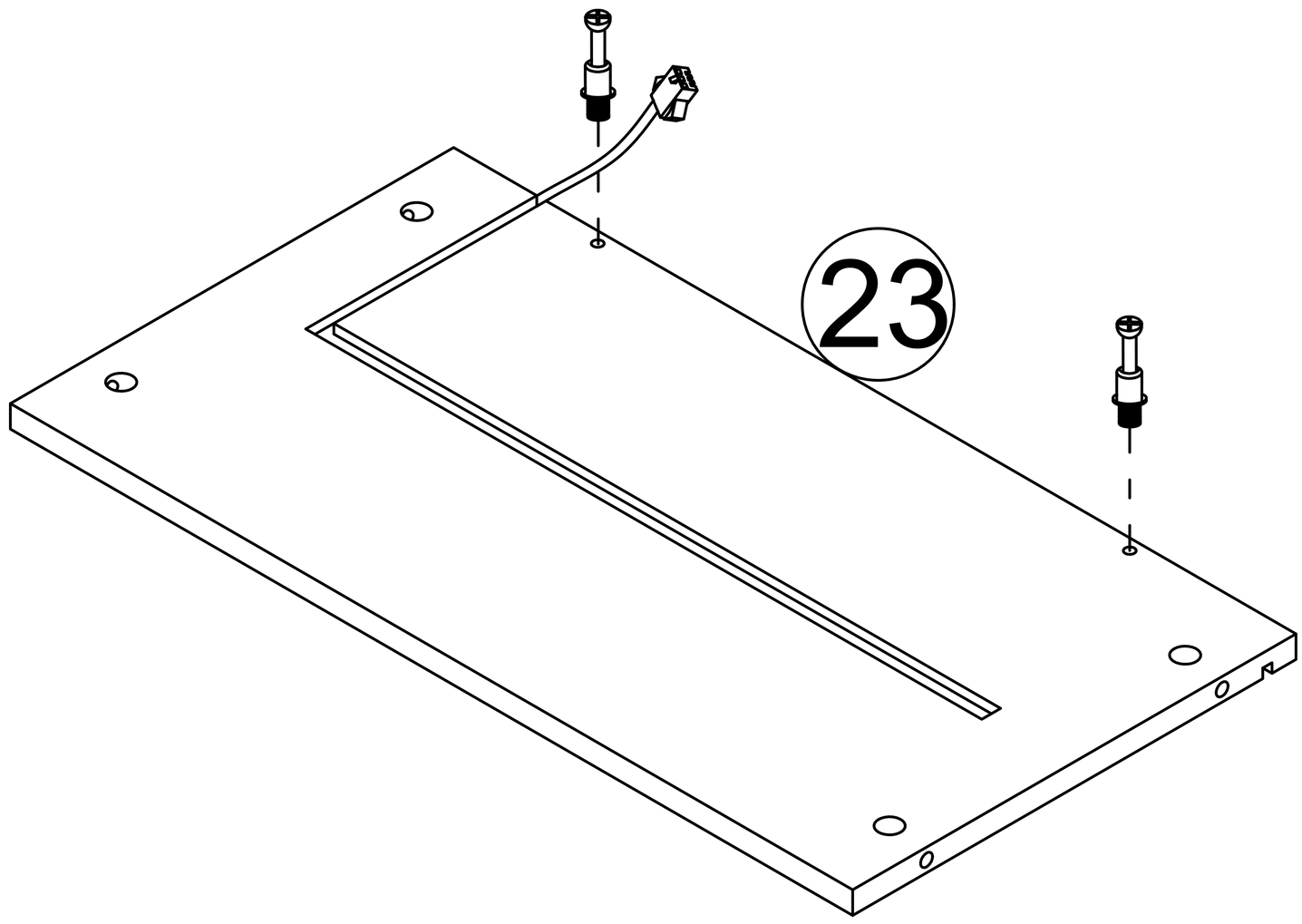

Step 44

B x2

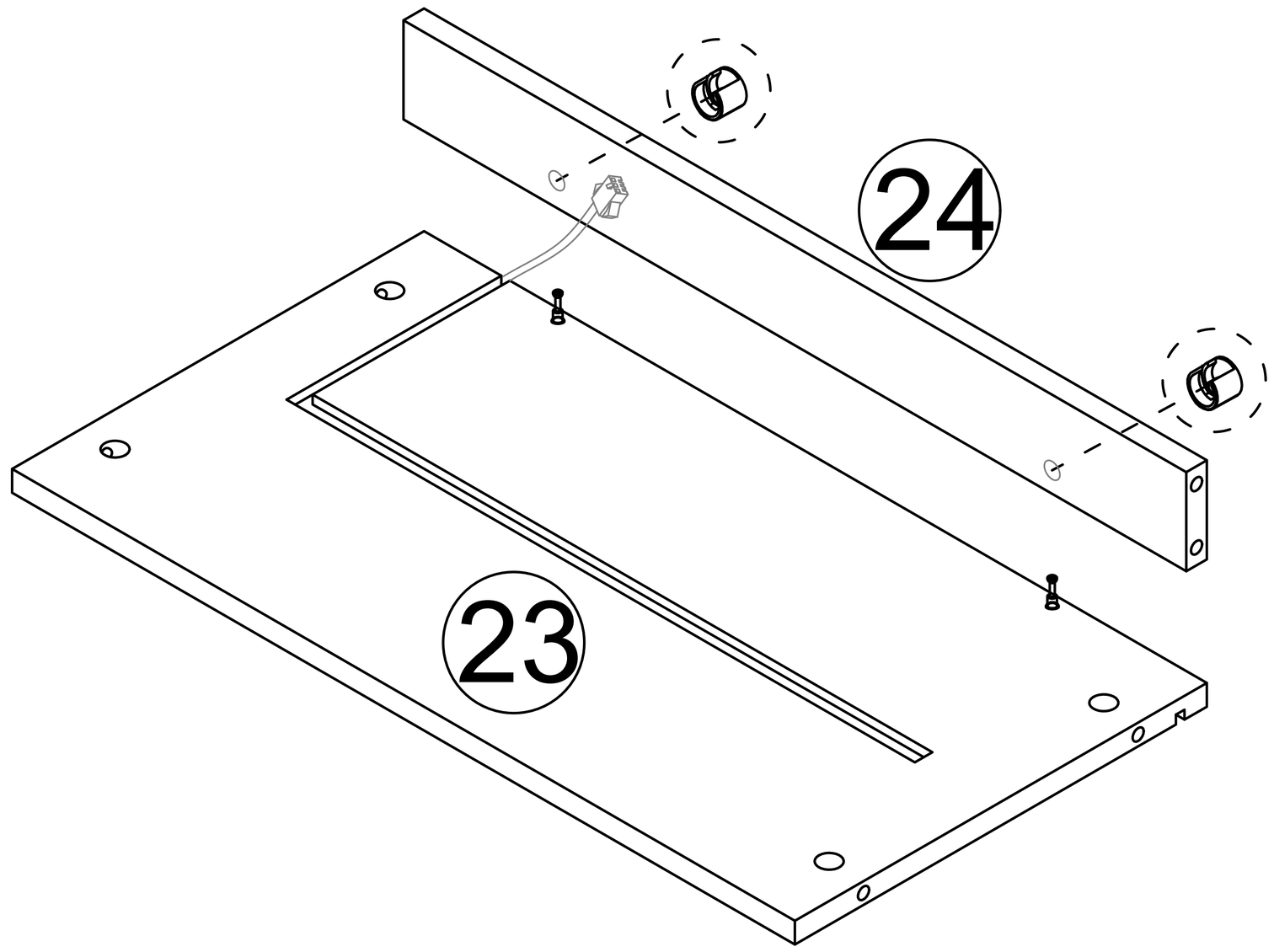

Step 45

B

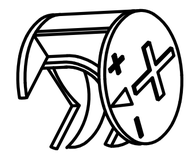

x4

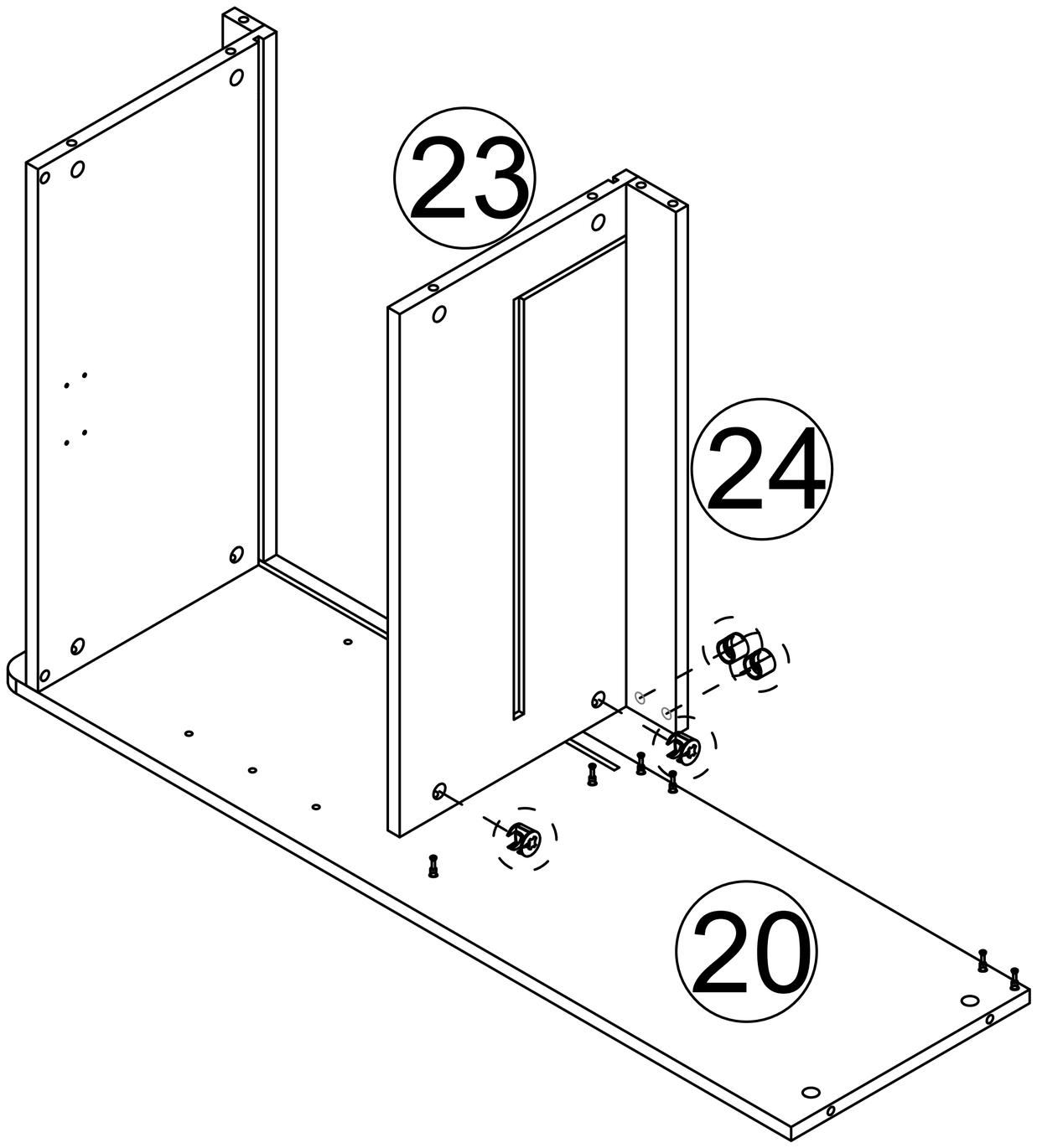

Step 46

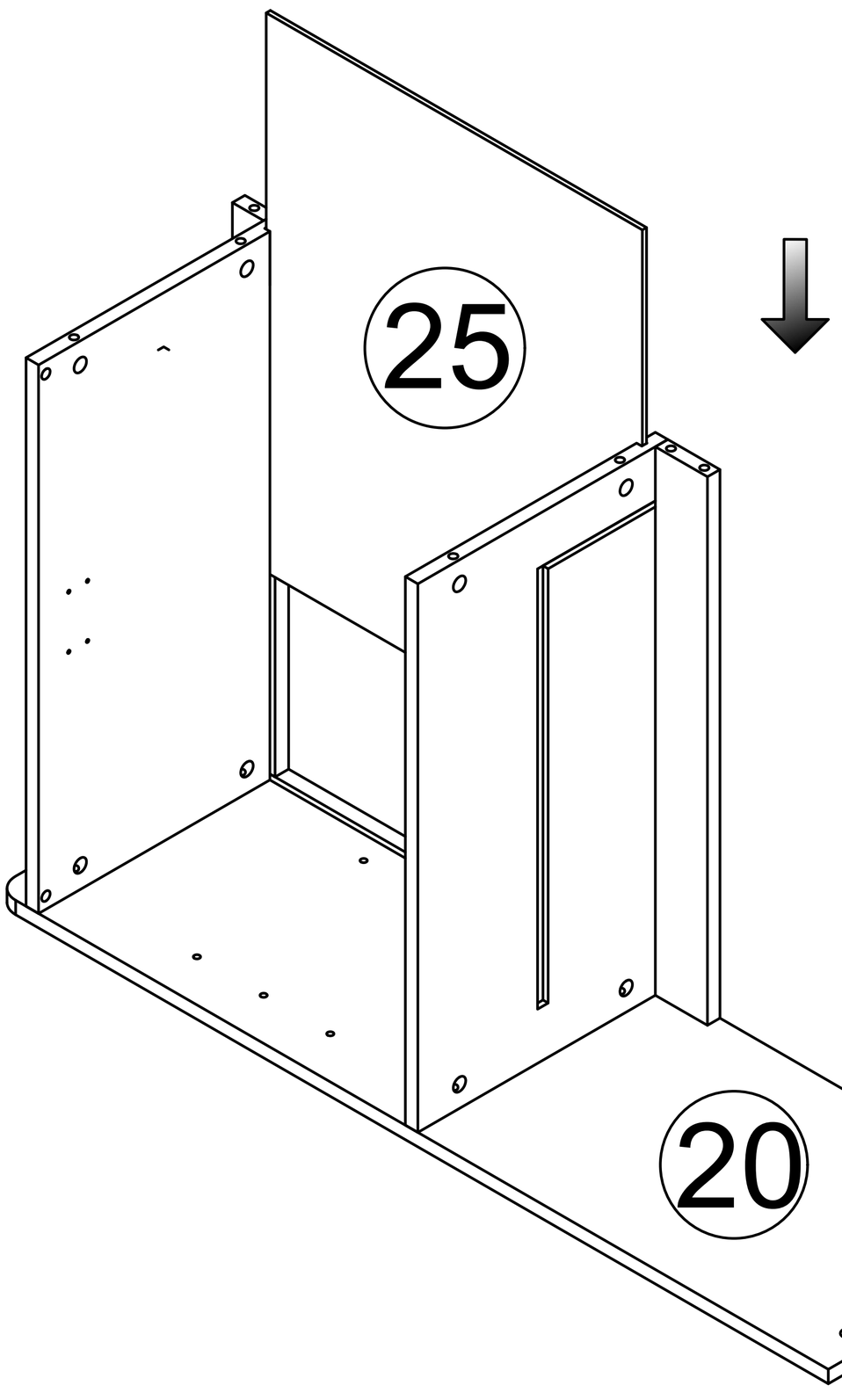

Step 47

B x2

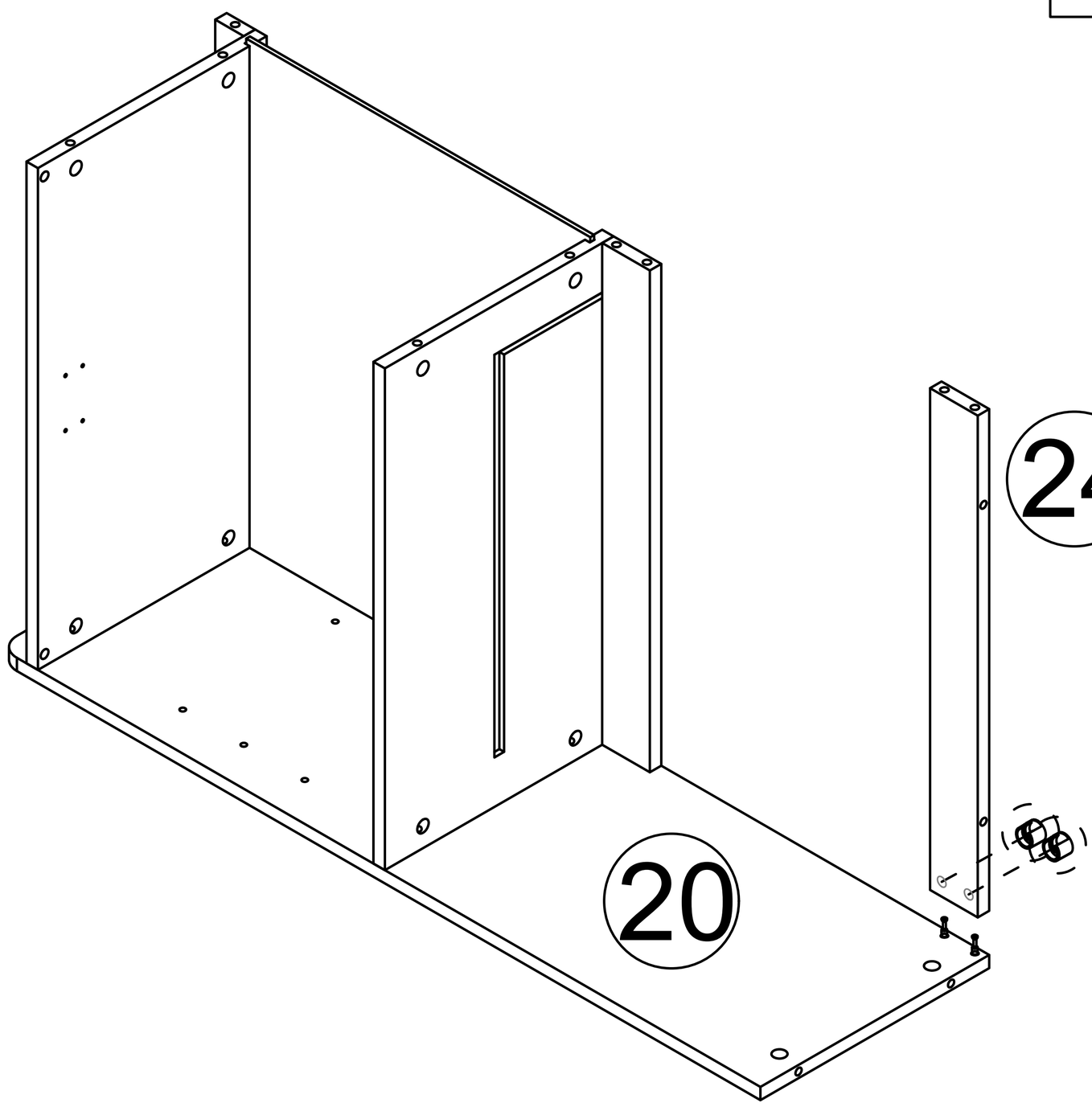

Step 48

A x9

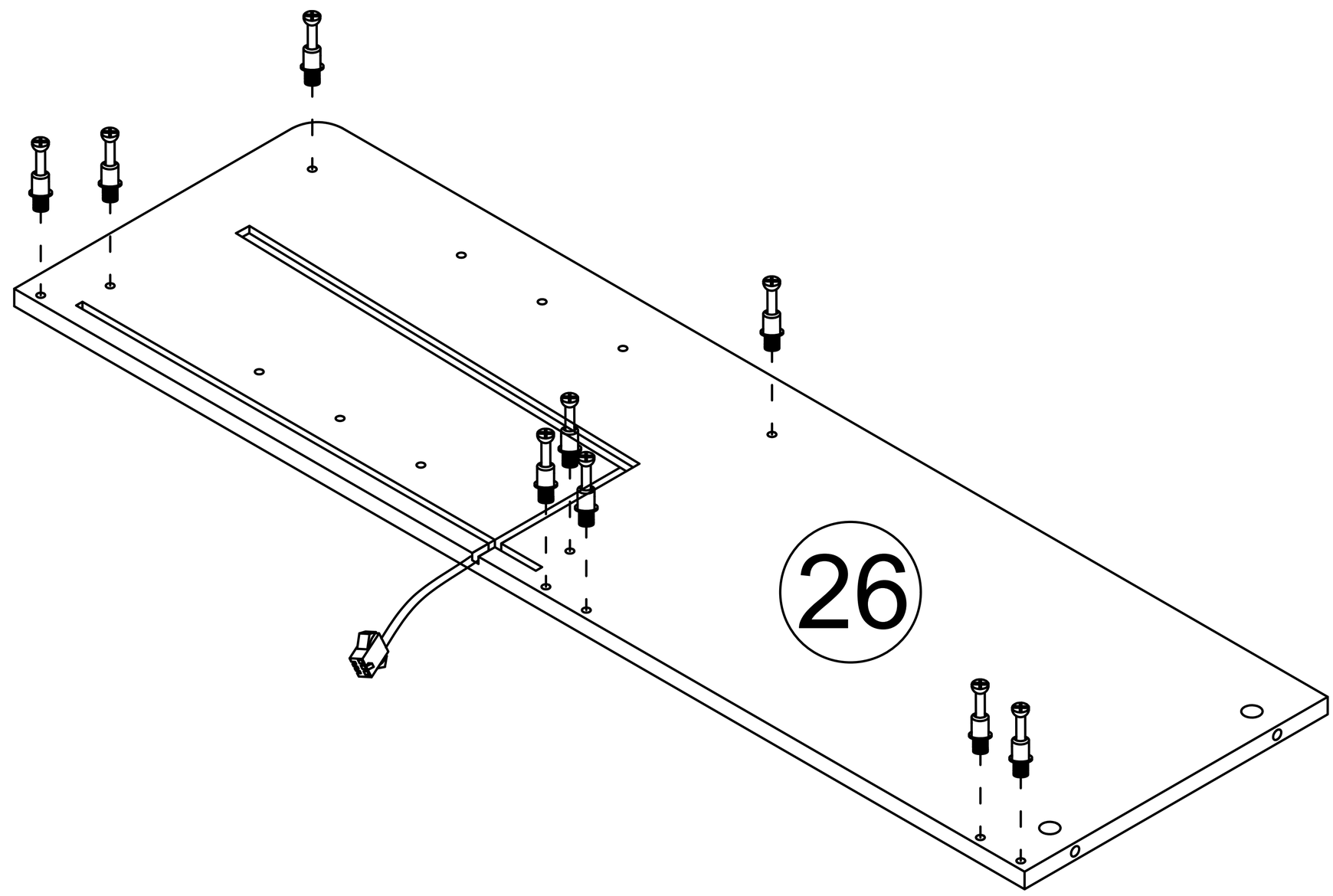

Step 49

B

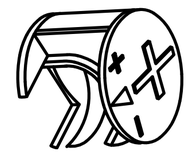

x9

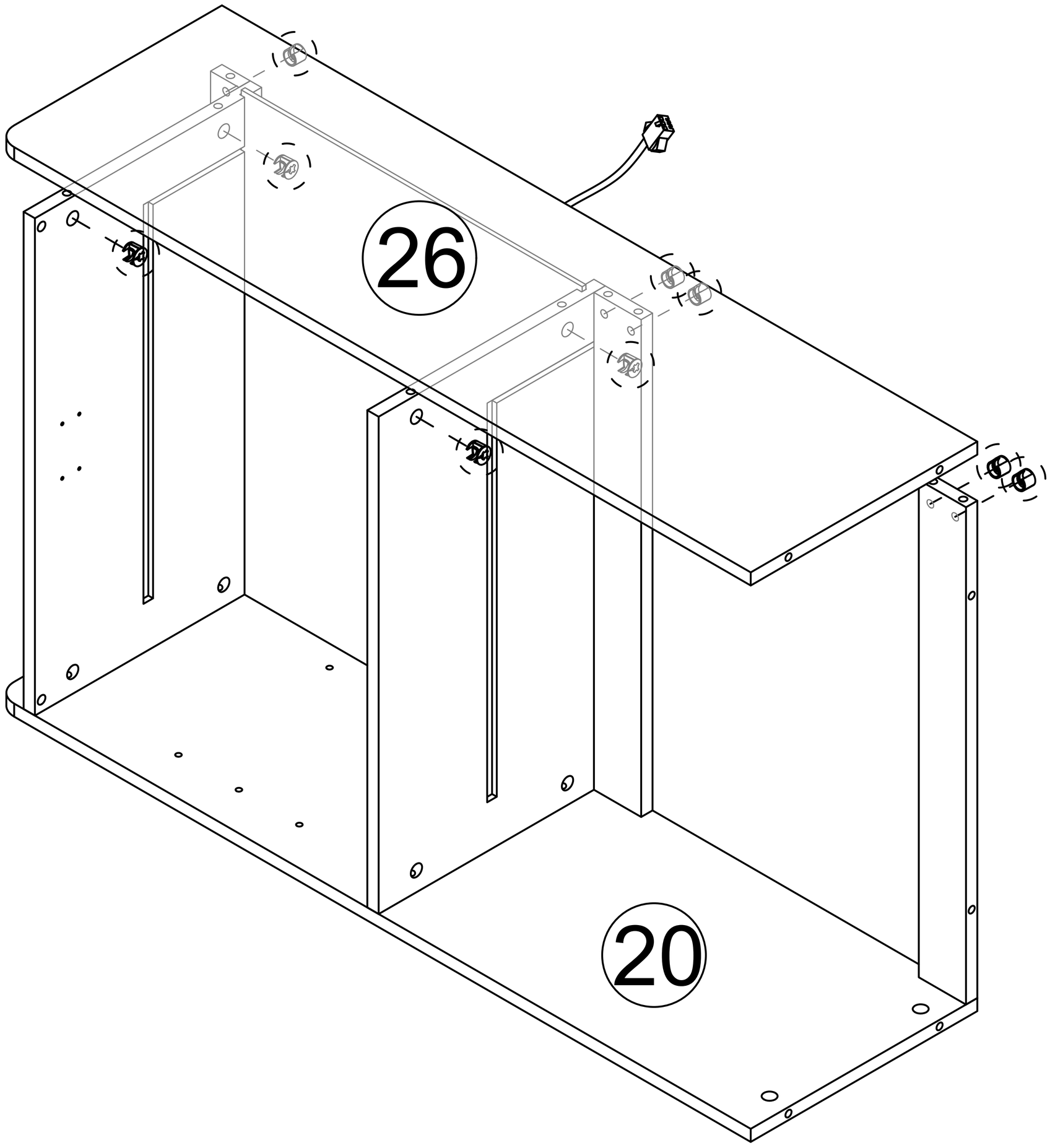

Step 50

B

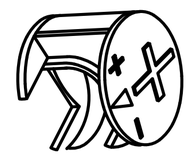

x6

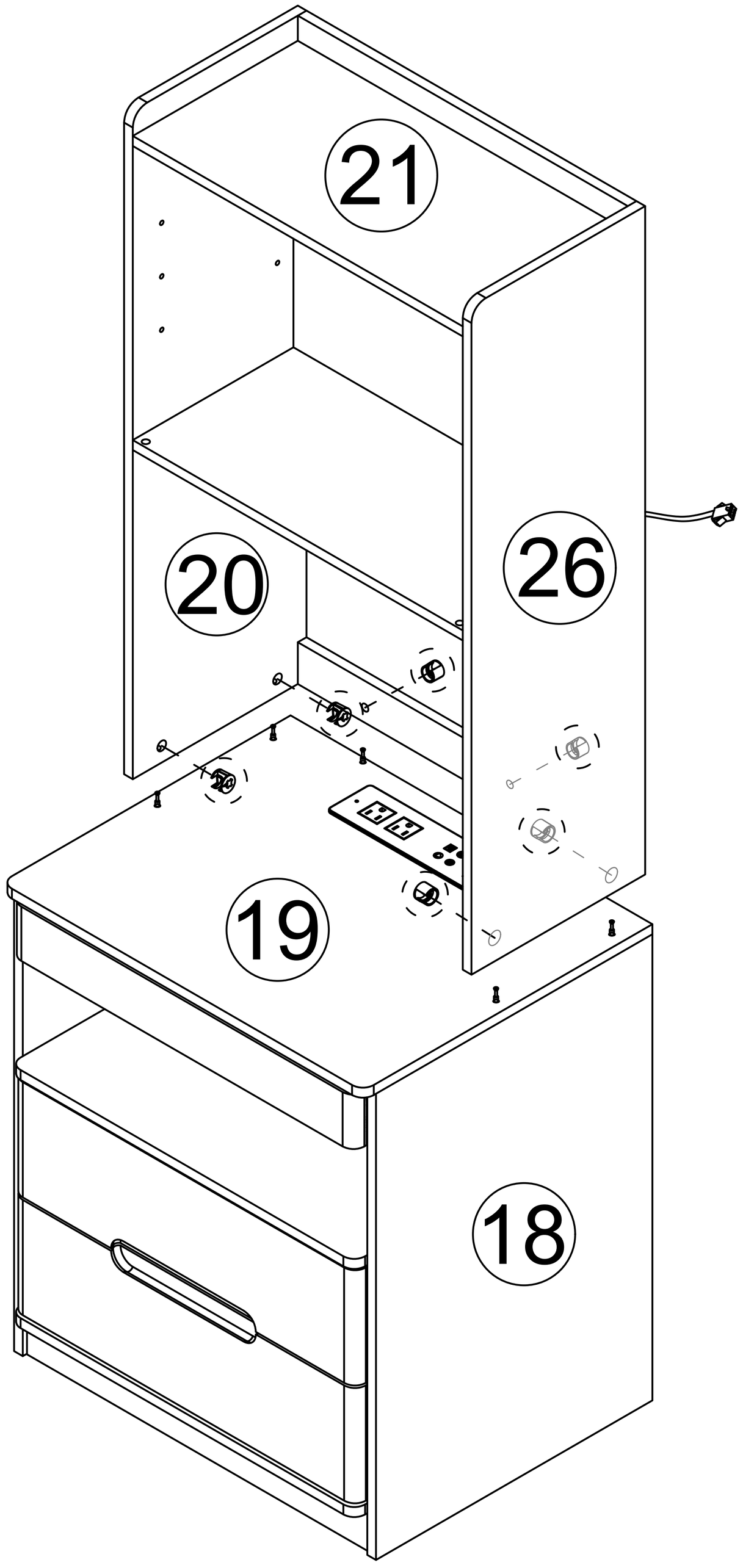

Step 51

G

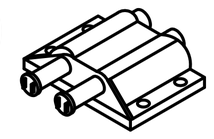

x1



x4

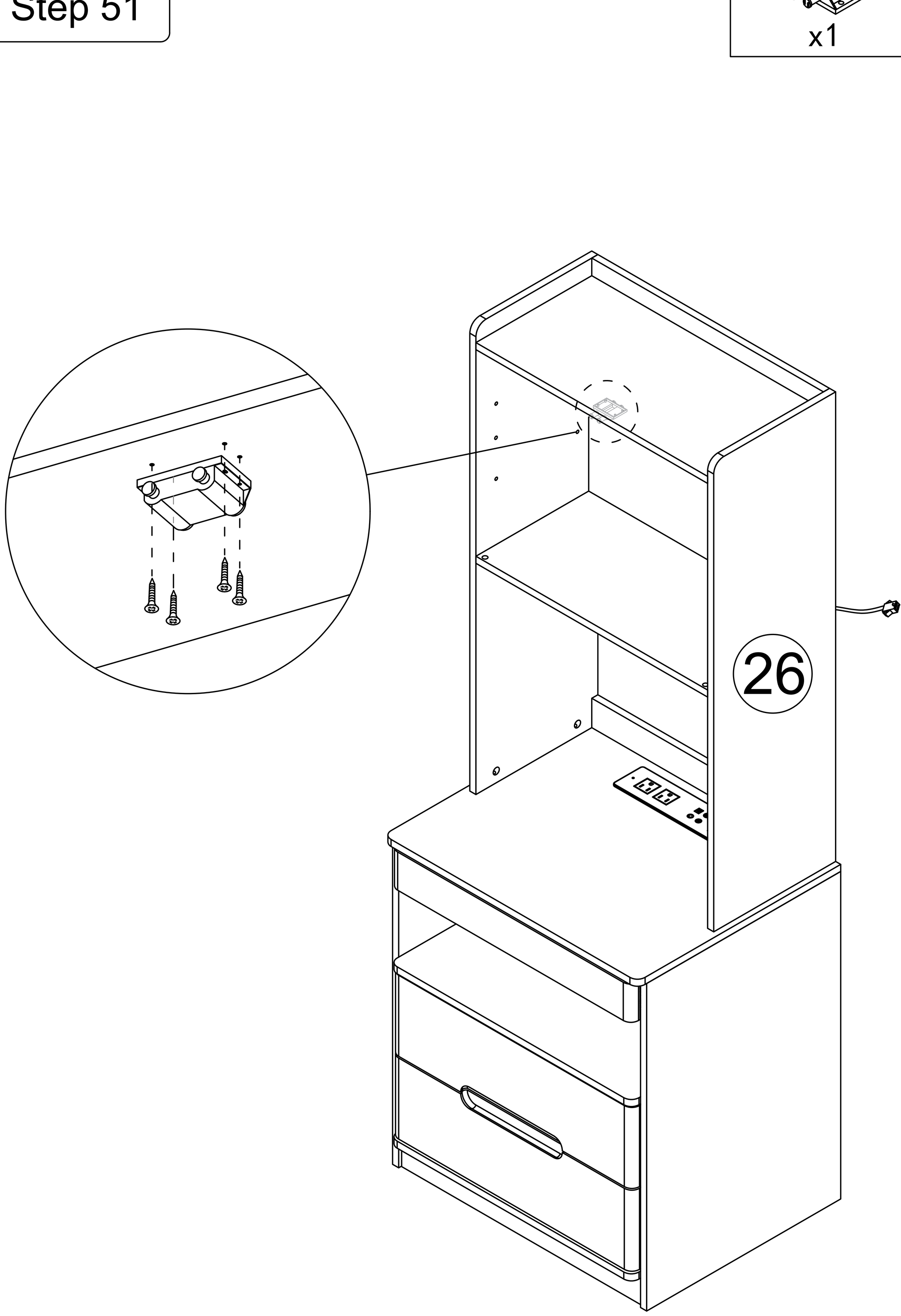

Step 52

H

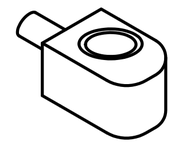

x4

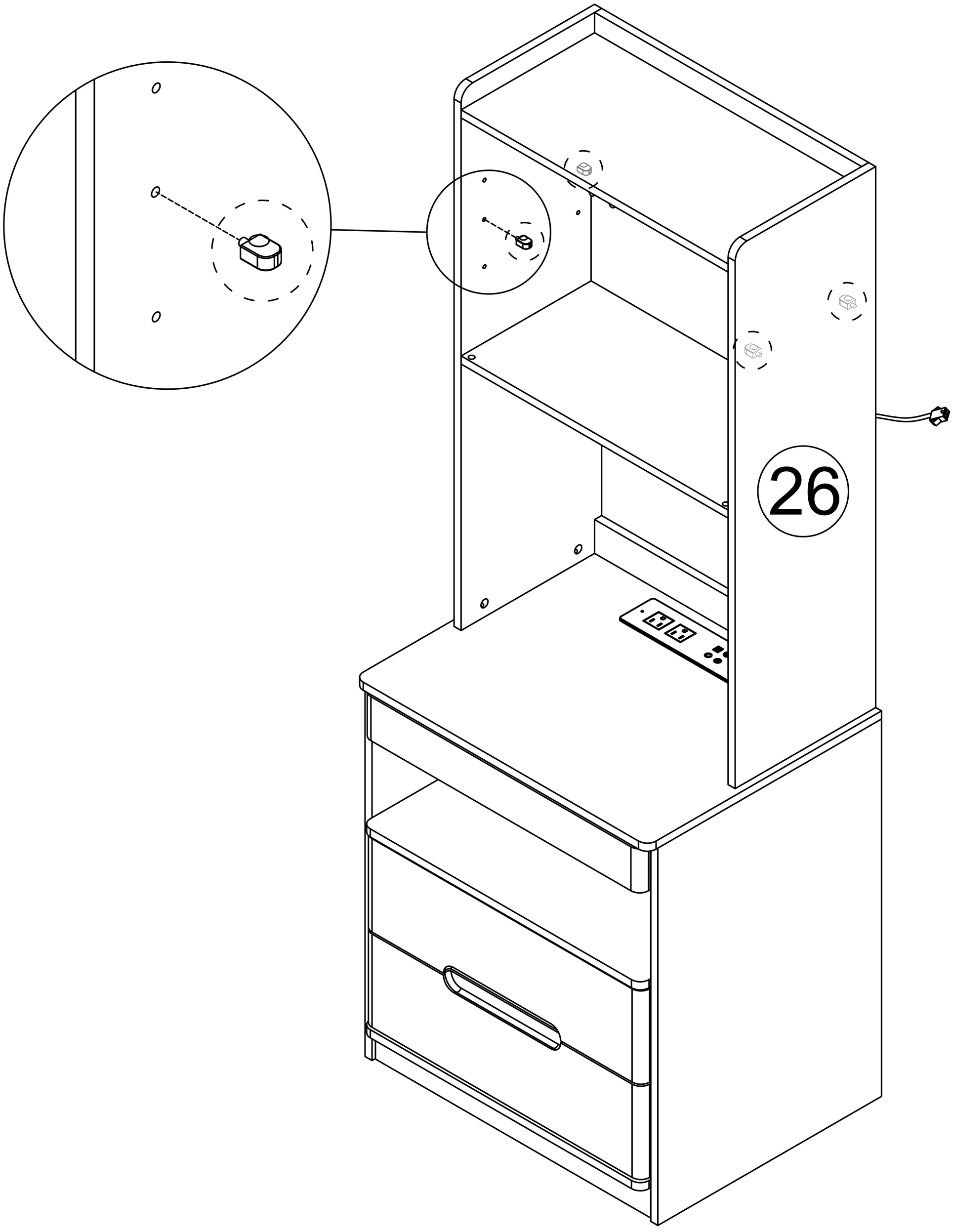

Step 53

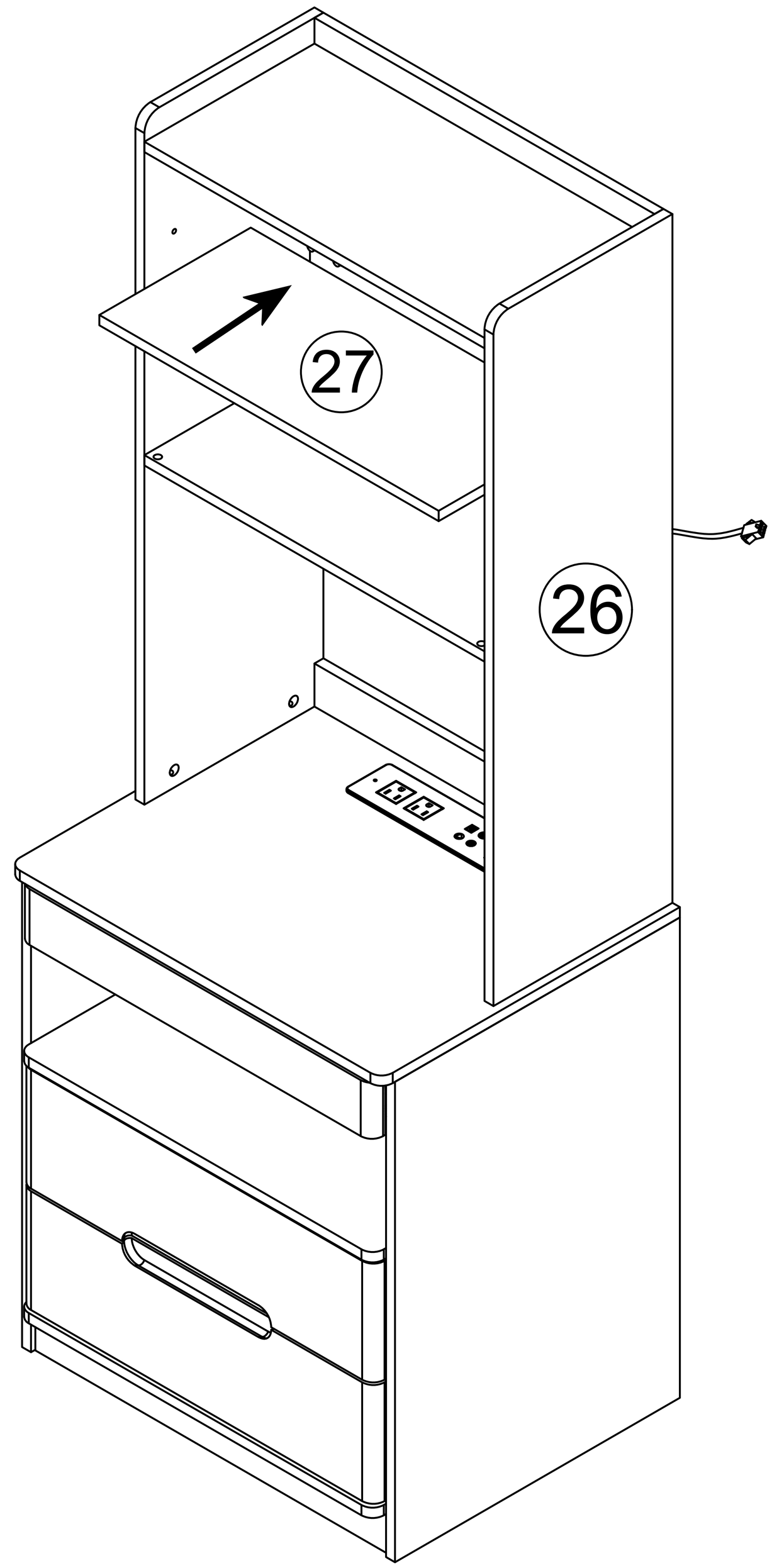

Step 54

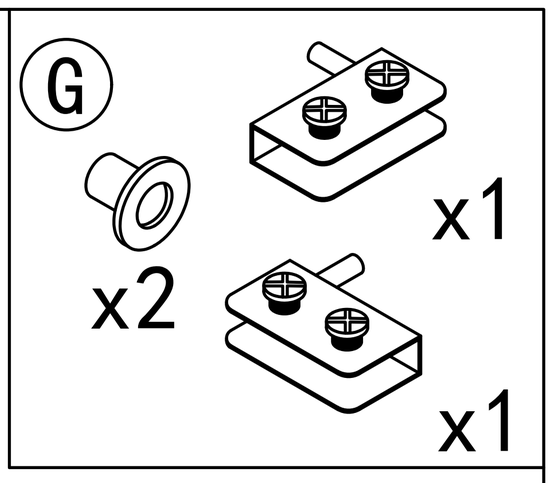

First, loosen the screws.

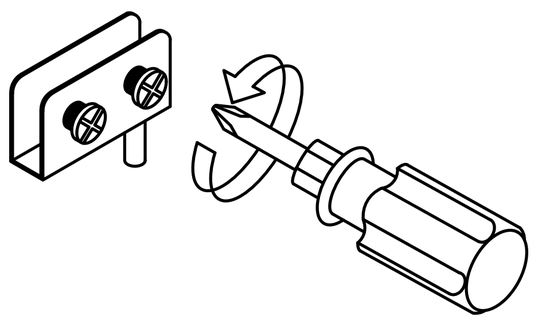

Note the orientation of the door hinge: the end with the screws faces toward the cabinet interior.

Step 55

First, loosen the screws.

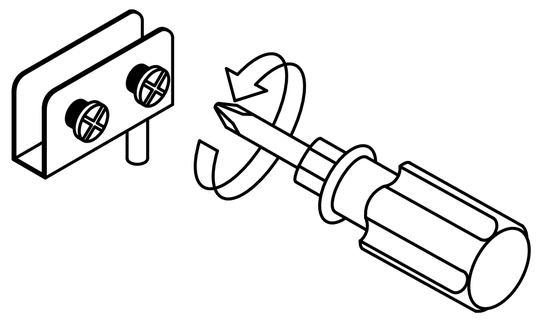

G

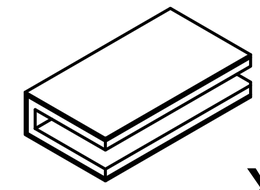

x1

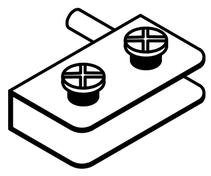

x1

1. Take out the white pad
2. Fit the pad around the edge of the glass panel
3. Then slide the metal clamp over the assembled position
4. Finally, tighten the screws securely

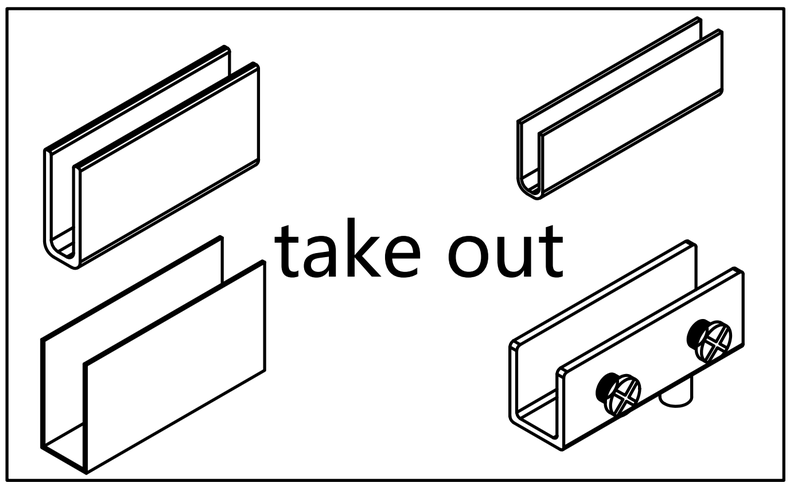

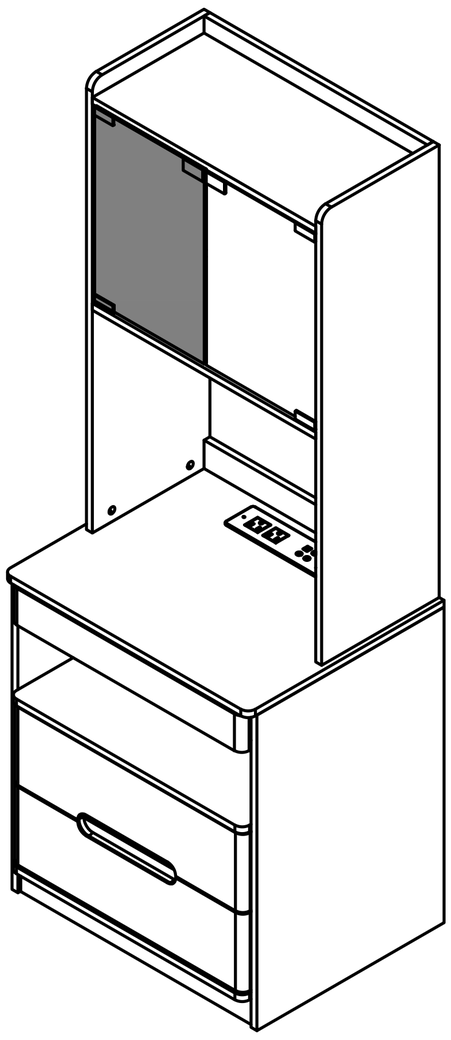

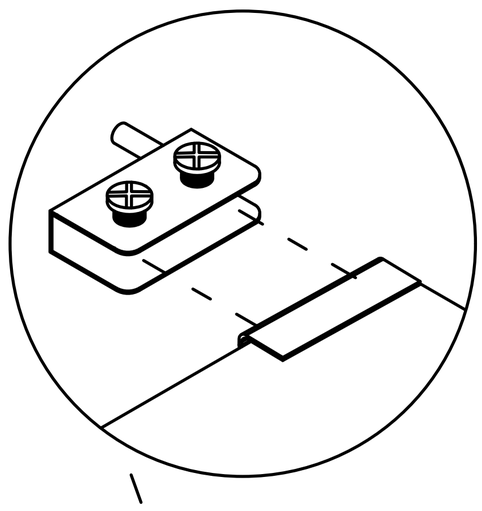

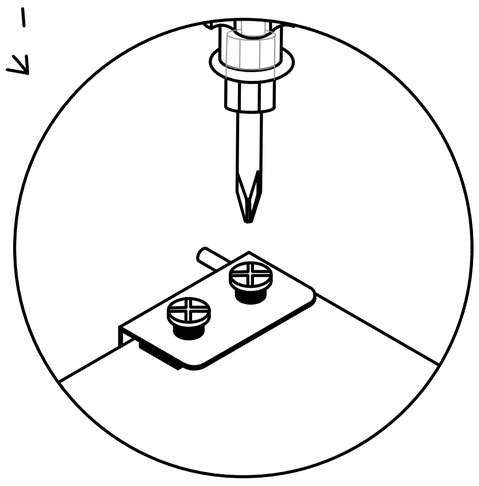

Locking screw

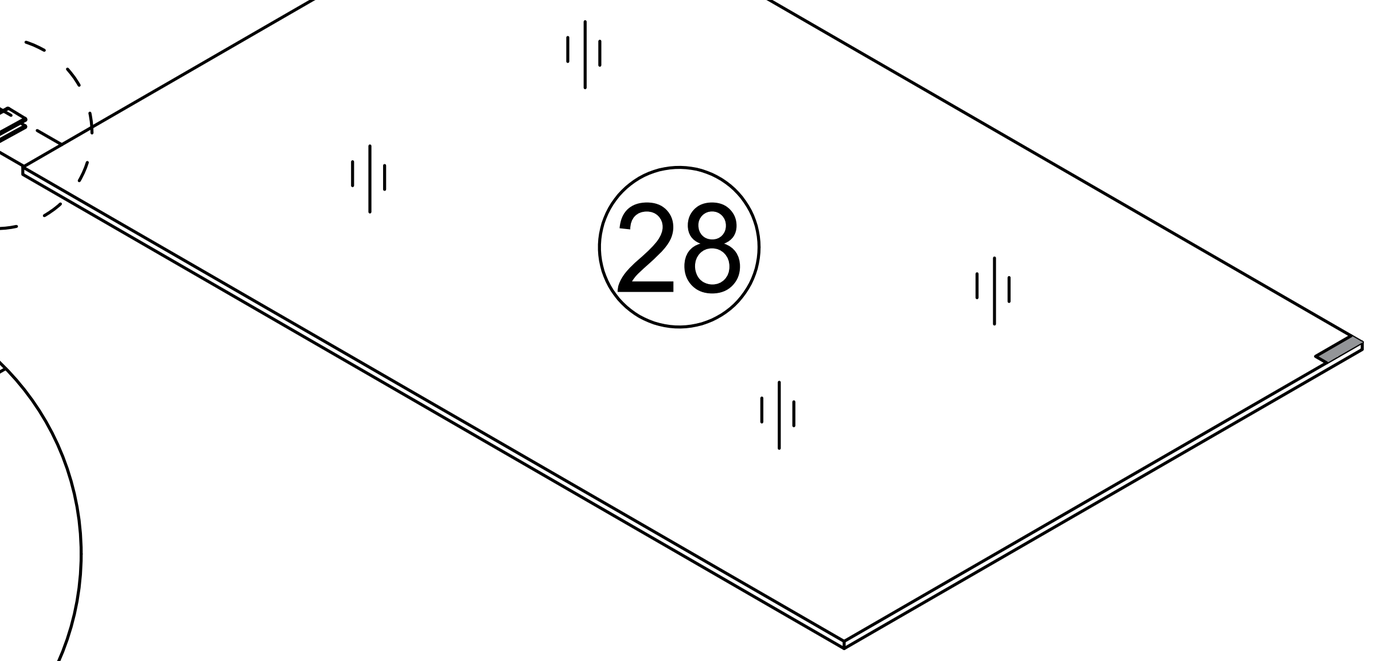

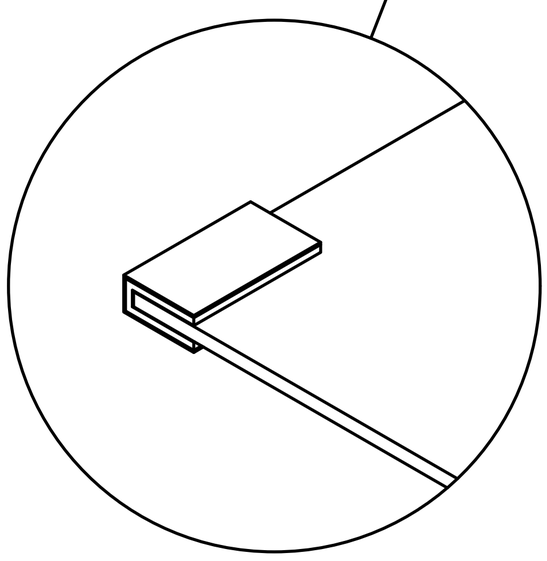

If you feel loose, please pinch
the accessory before installation

Step 56

First, loosen the screws.

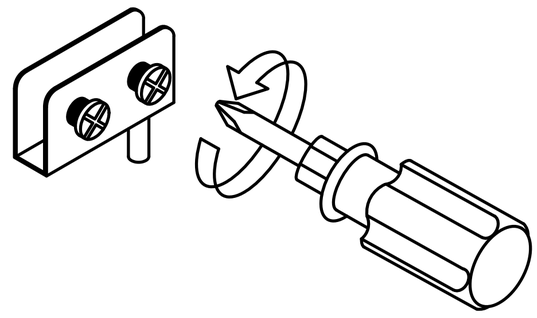

G

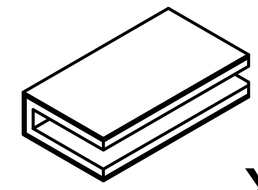

x1

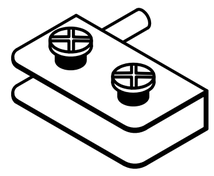

x1

1. Take out the white pad
2. Fit the pad around the edge of the glass panel
3. Then slide the metal clamp over the assembled position
4. Finally, tighten the screws securely

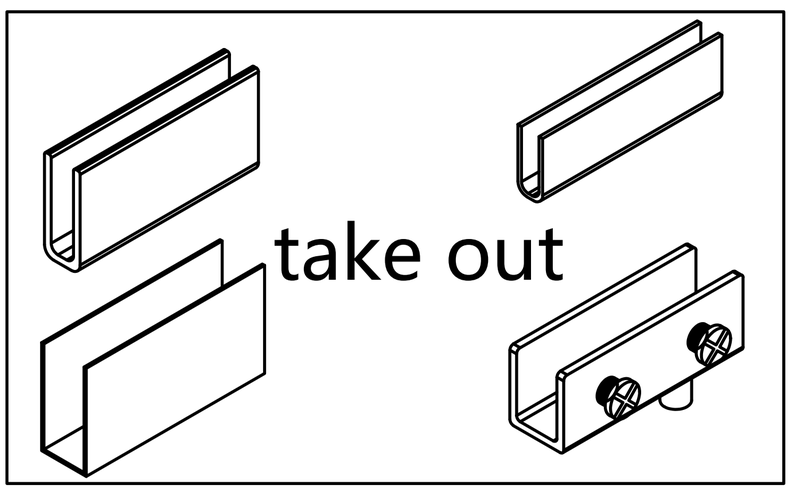

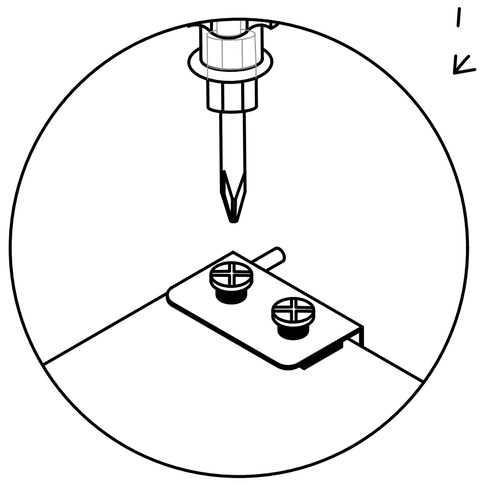

Locking screw

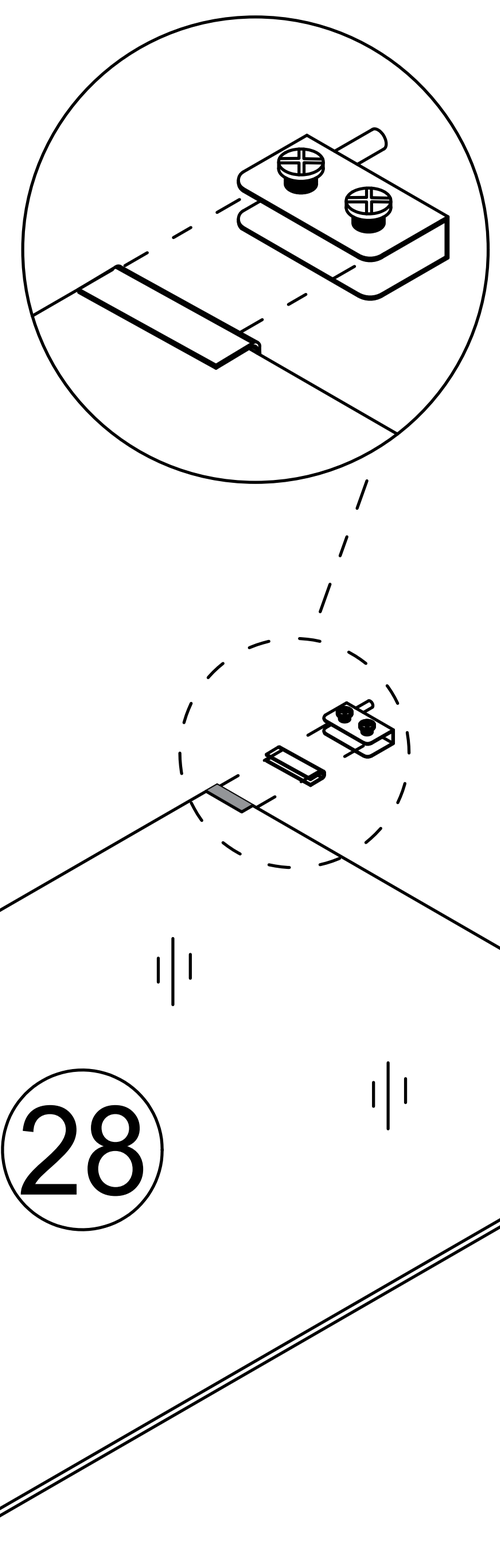

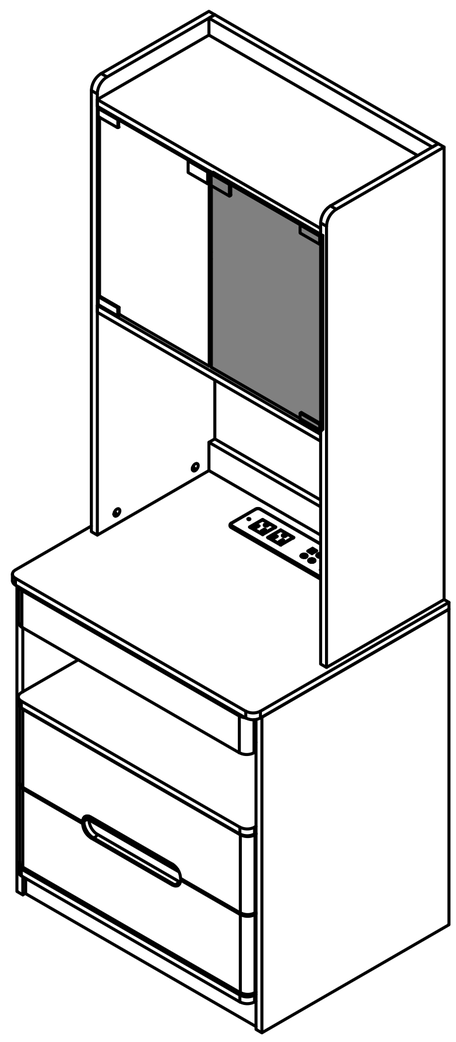

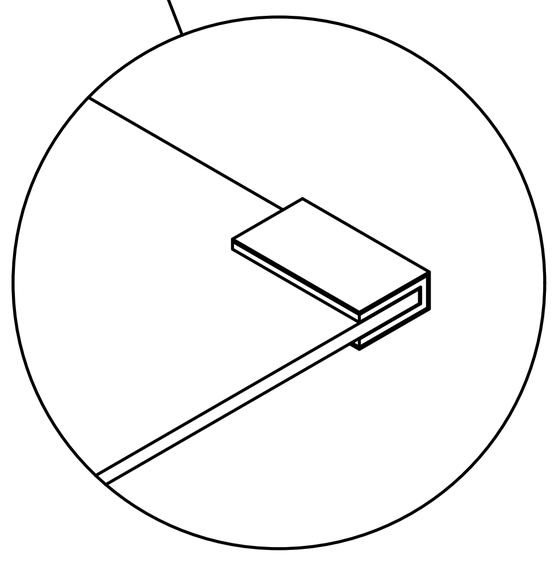

If you feel loose, please pinch
the accessory before installation

Step 57

Pay attention to the direction of
the door hinge during installation

G



x2

When installing a glass door, it is recommended to have two people install it to avoid the glass door colliding or hitting oneself.

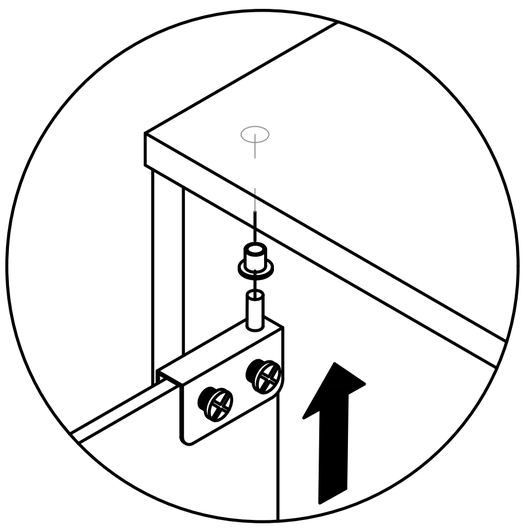

first

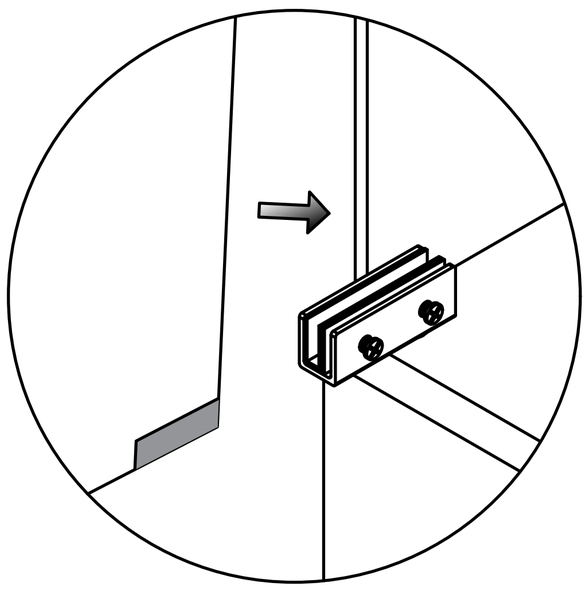

Remove white pad

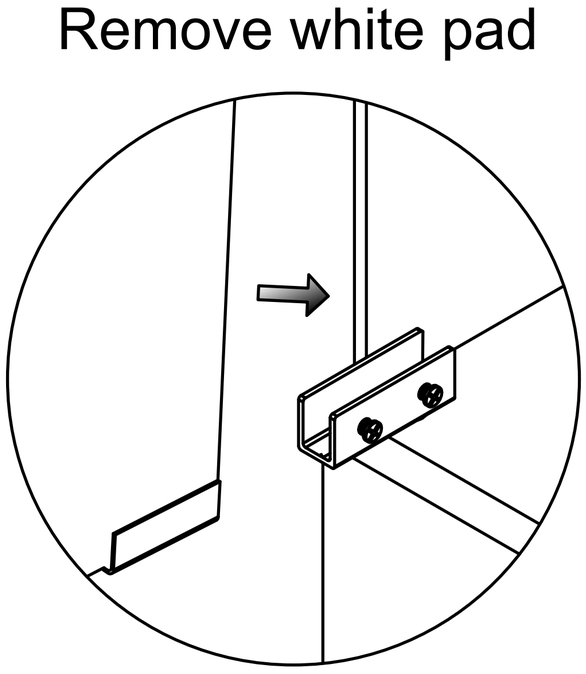

Fit the pad around glass edge

second

Insert the glass into the door hinge's slot.

third

Locking screw

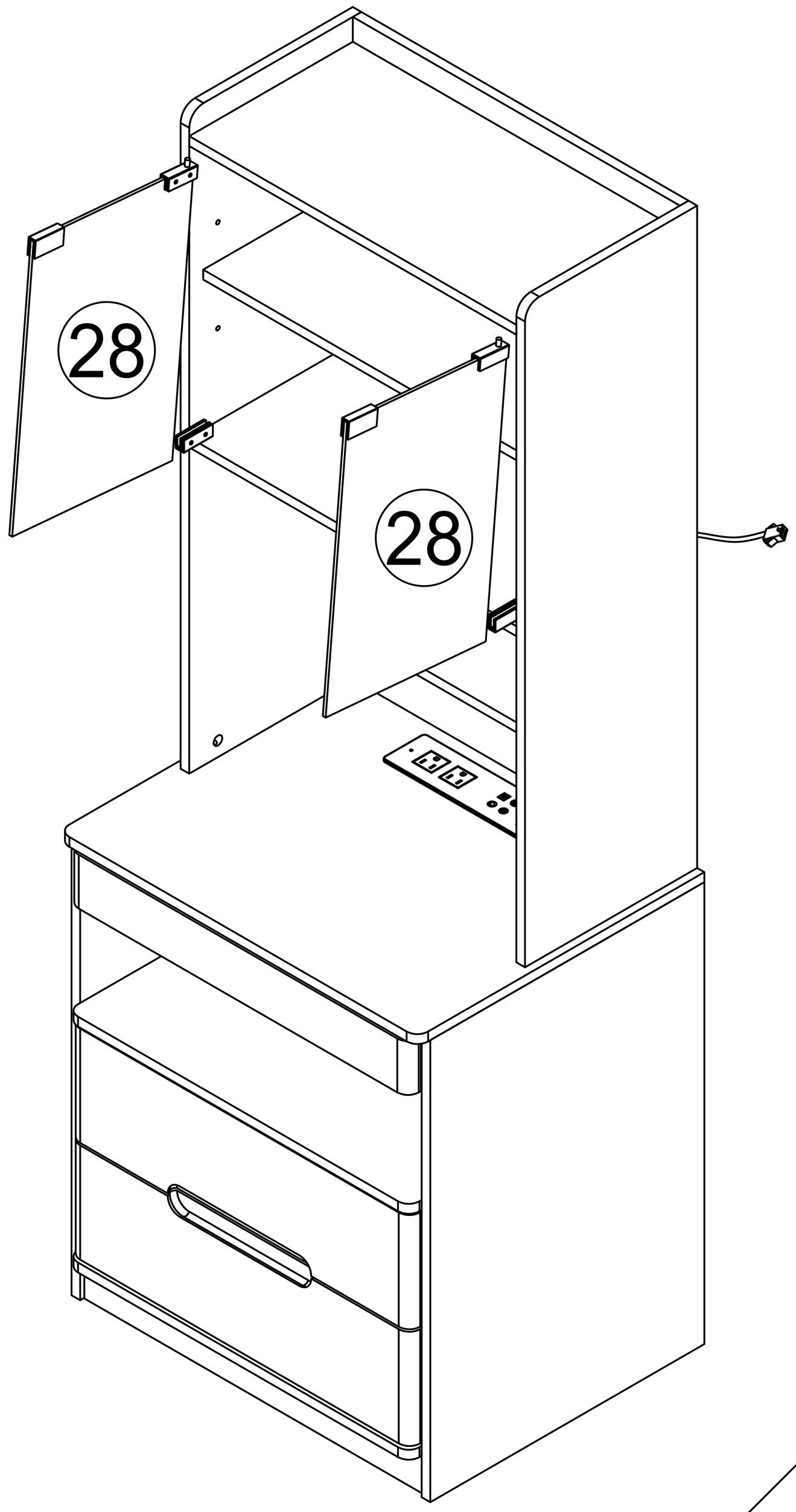

Step 58

Open the glass door

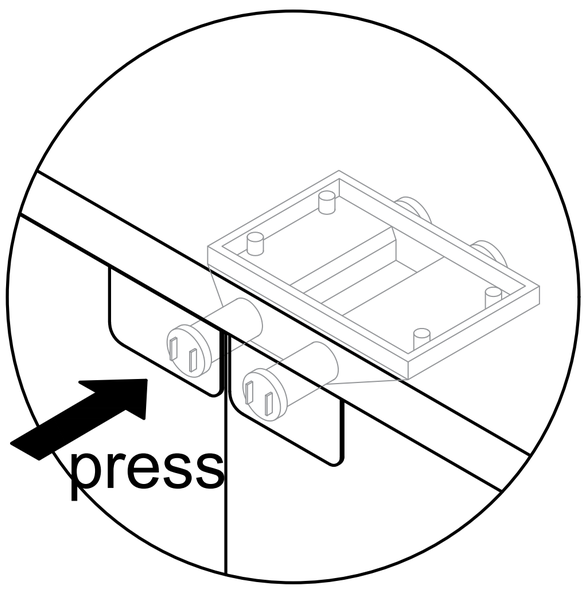

Close the glass door

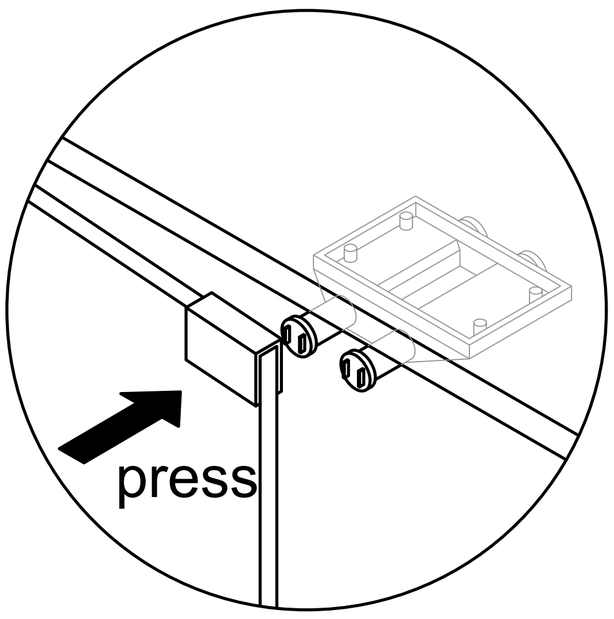

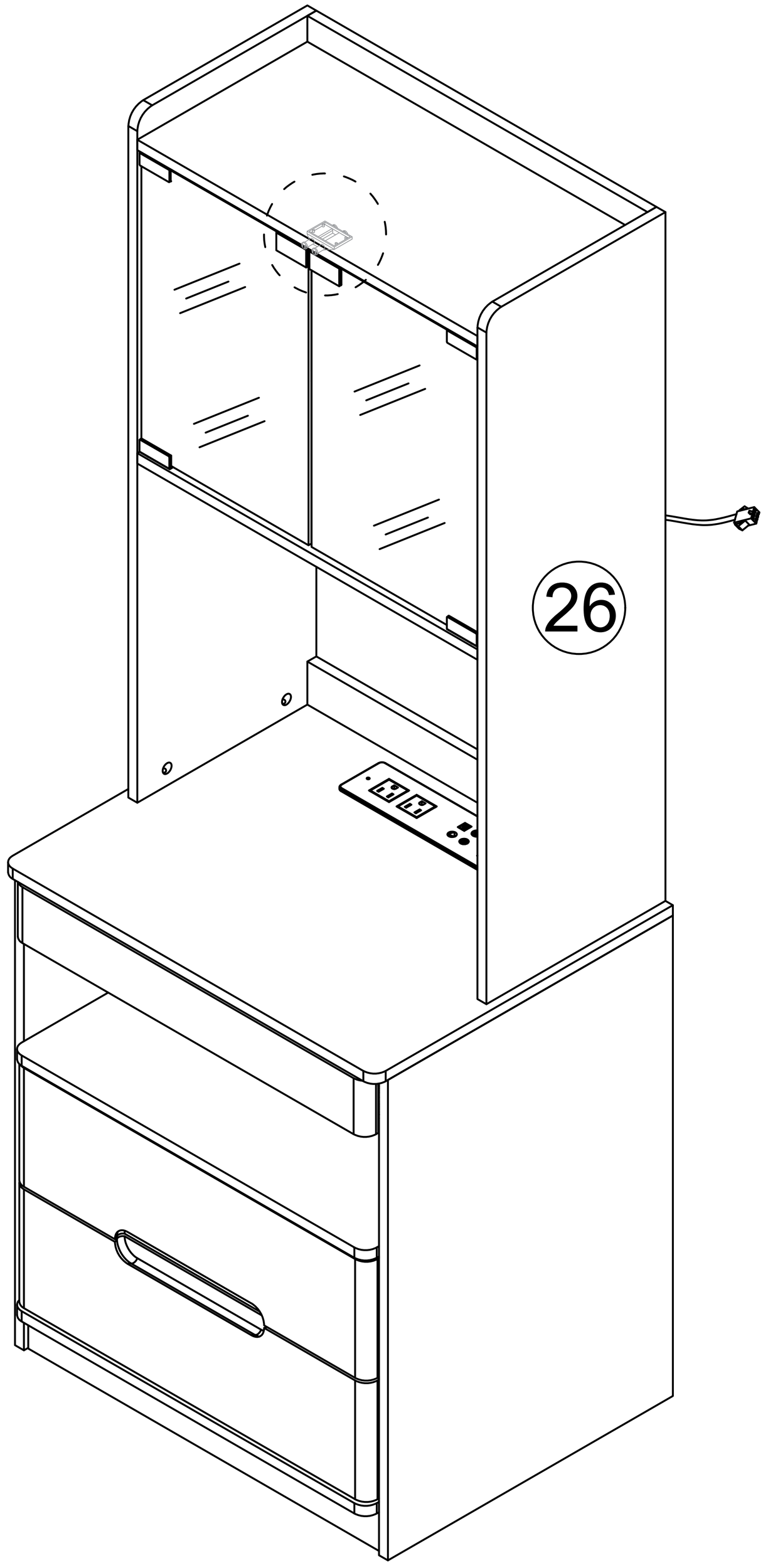

Step 59

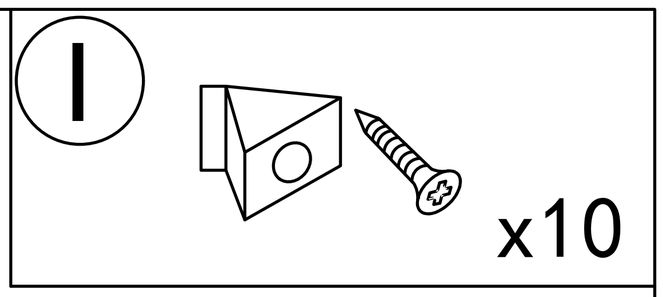

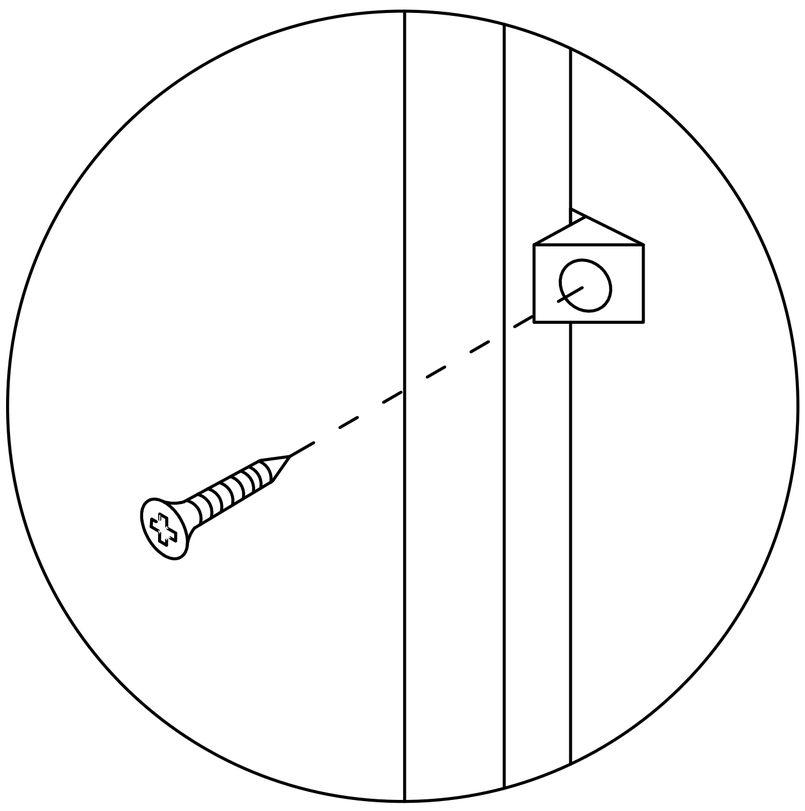

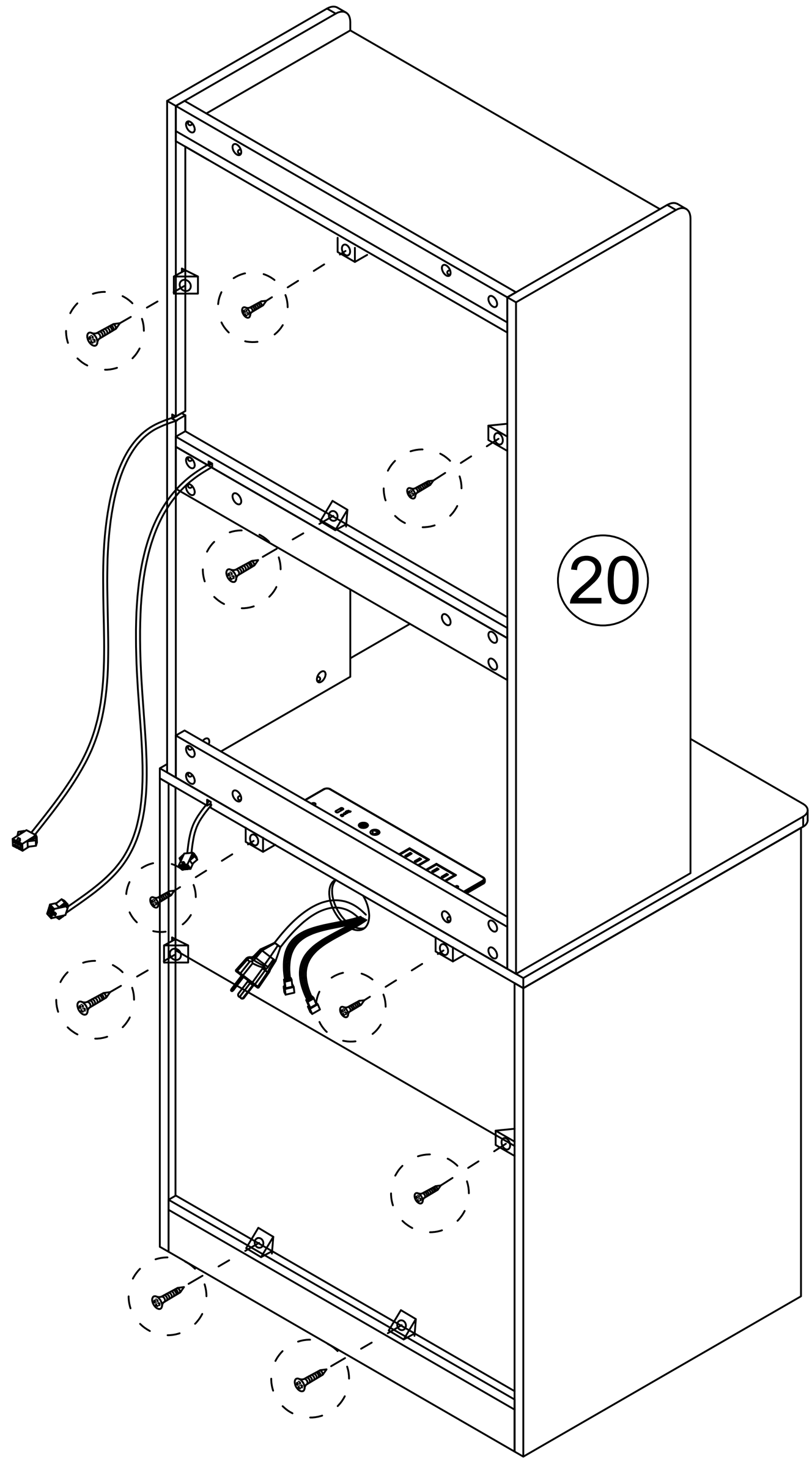

Step 60

J

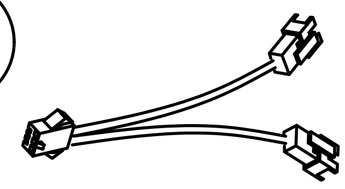

x1

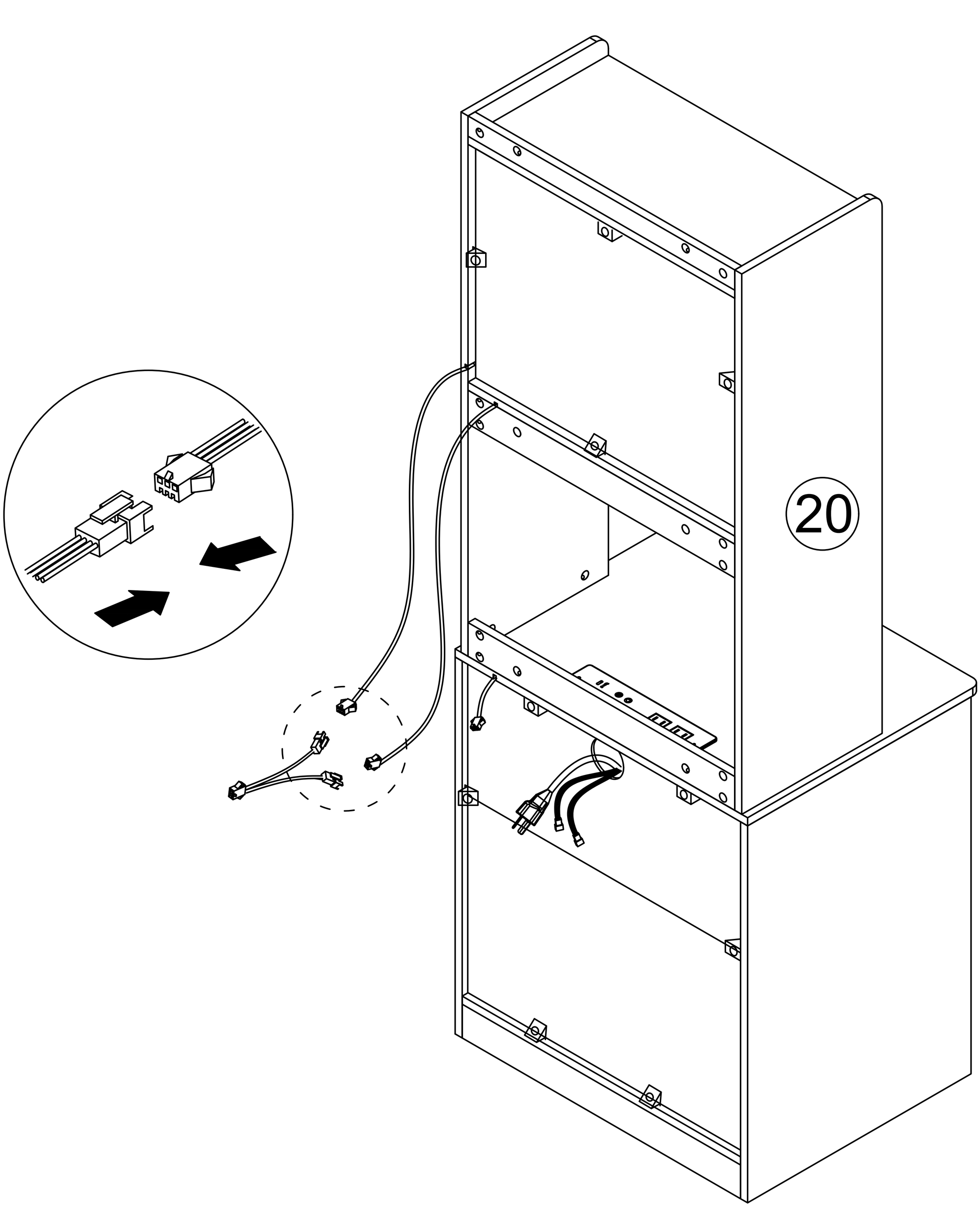

Step 61

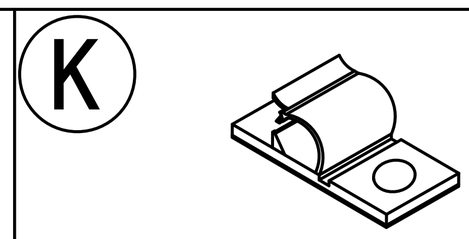

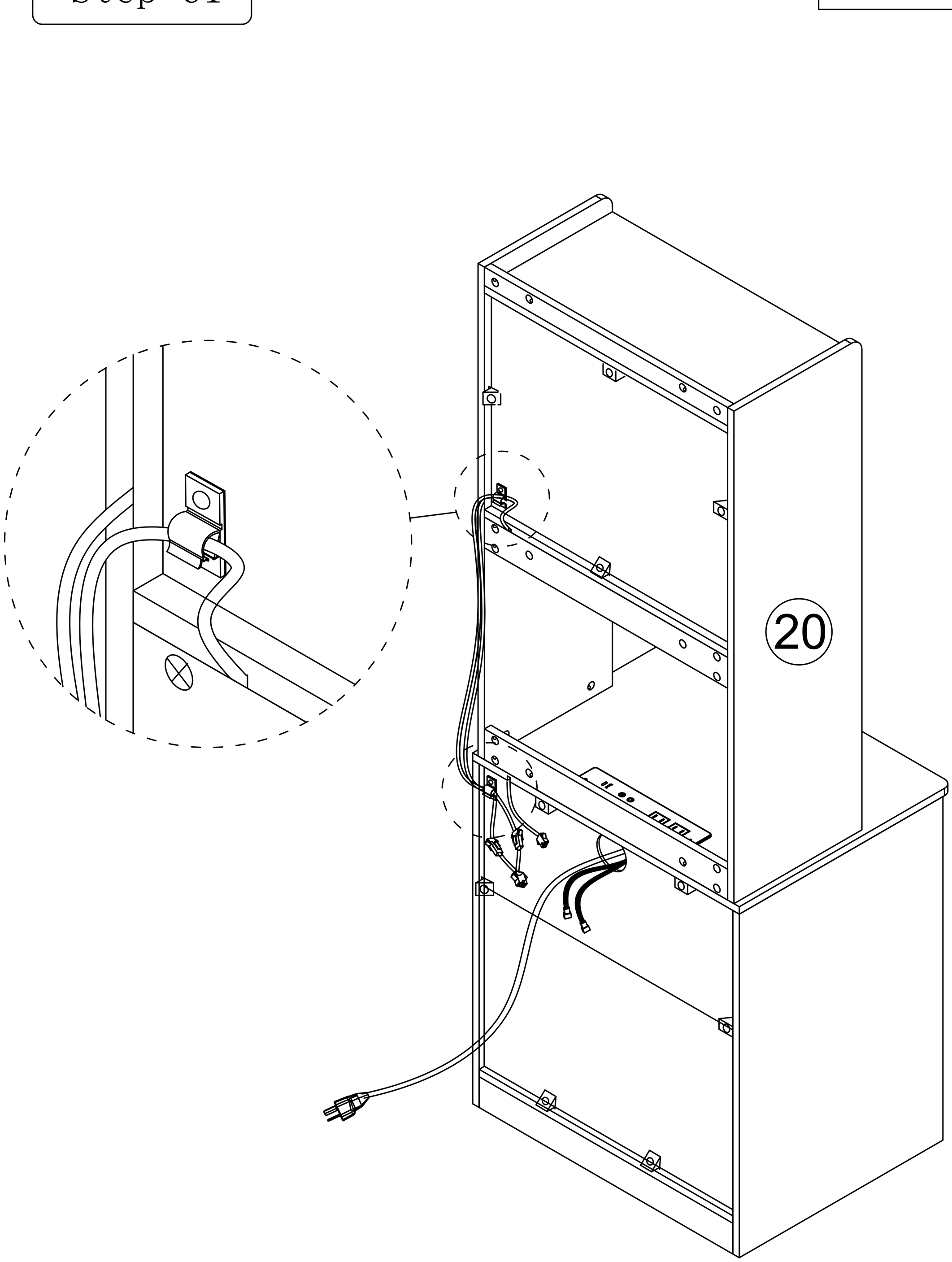

Step 62

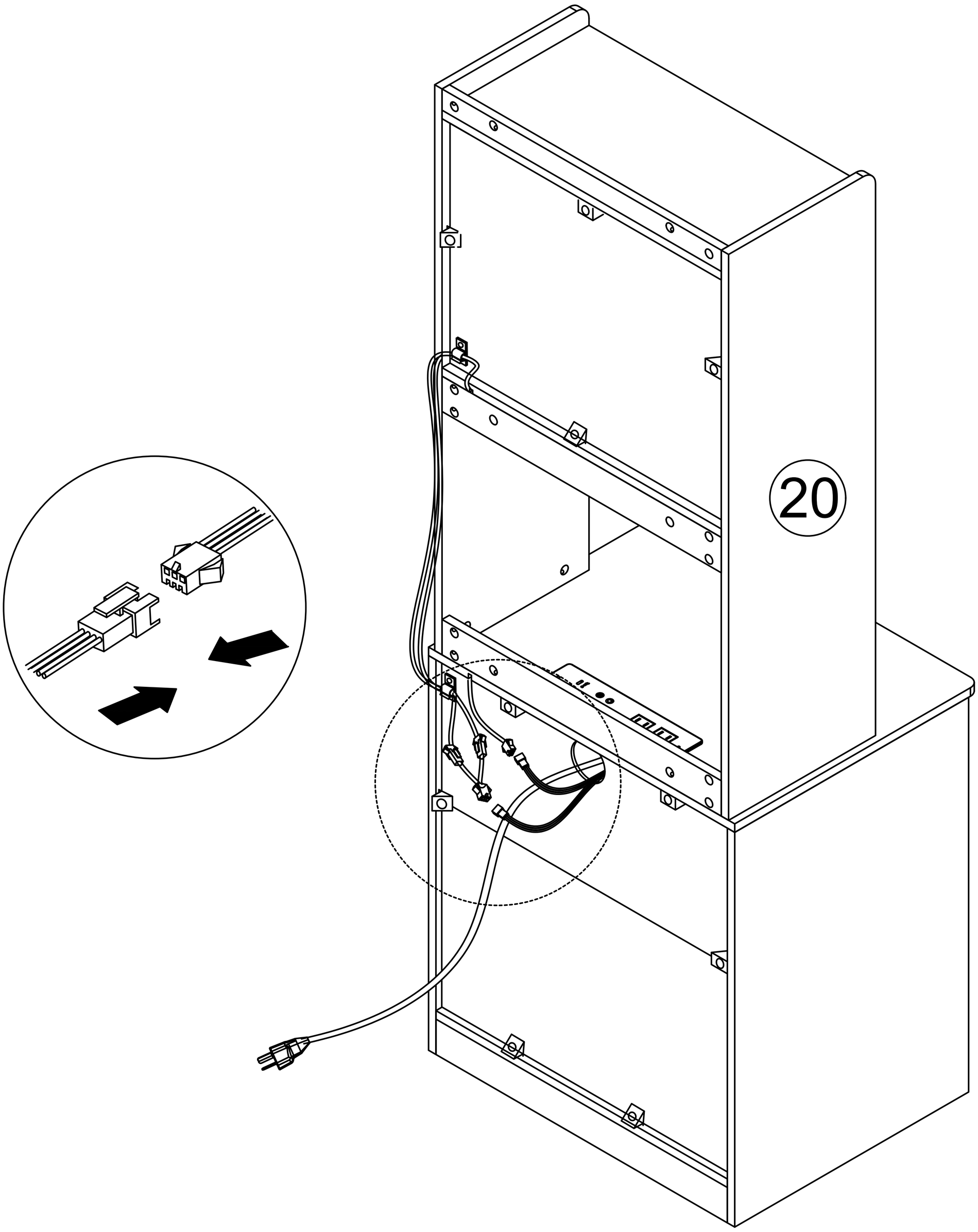

Step 63

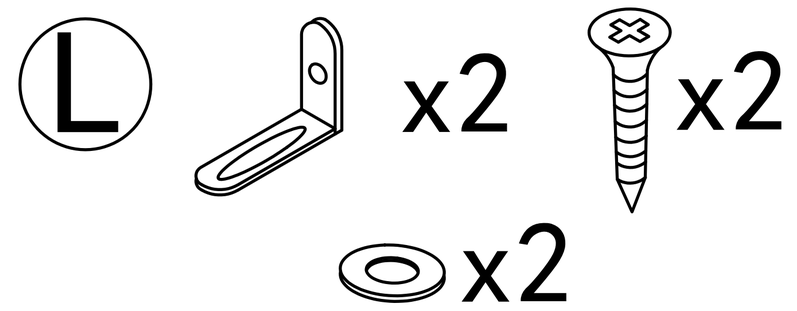

Install as required

3.5x14mm

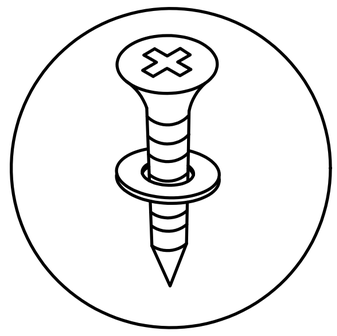

Install the anti fall hardware on the cabinet as shown in the picture first

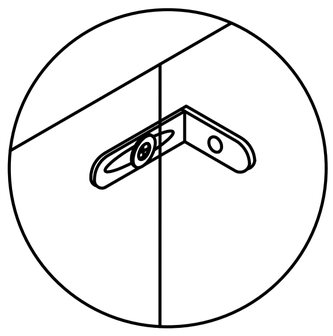

Then mark the wall with a pen through the holes in the anti-fall hardware

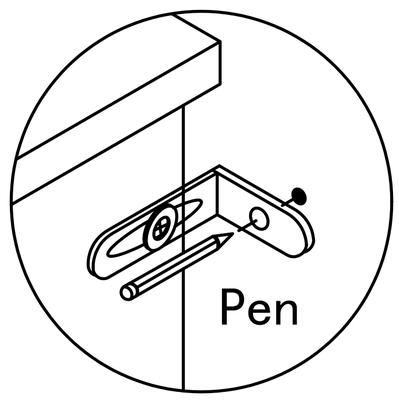

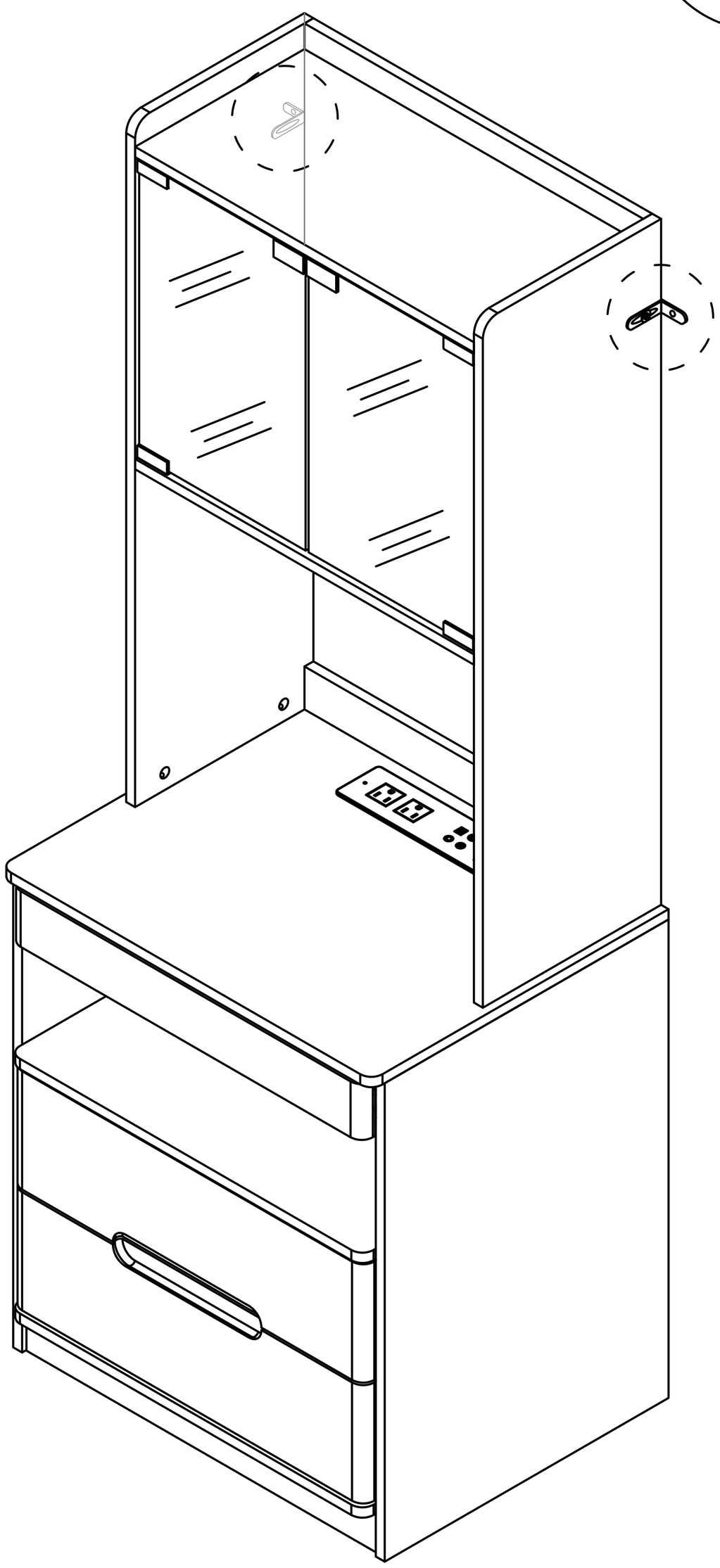

Step 64

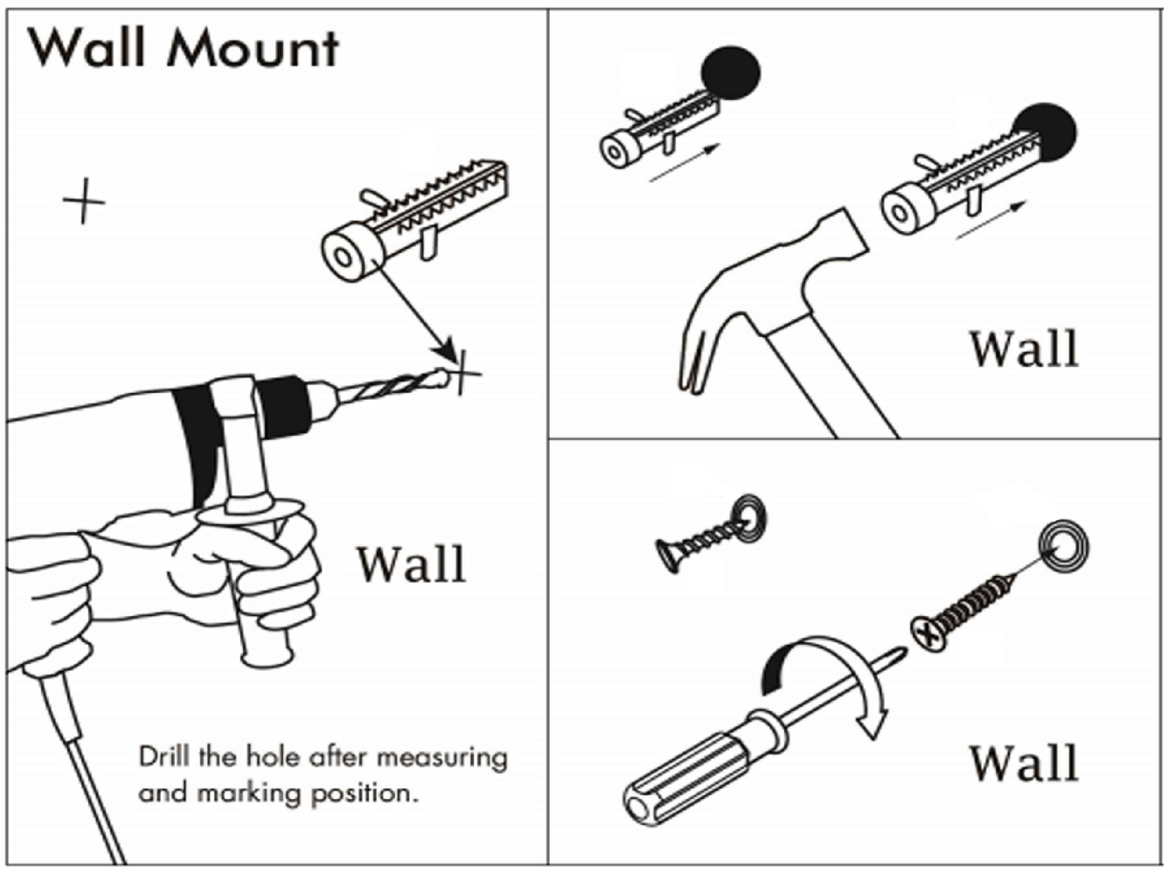

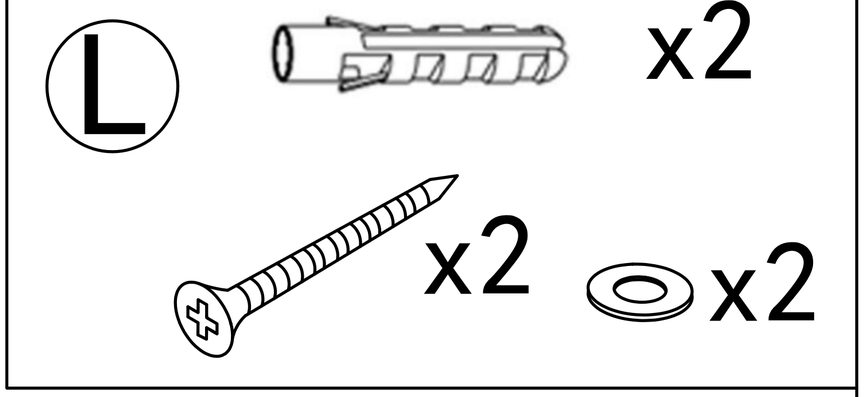

Drill the hole with an electric drill and punch in the colloidal particles

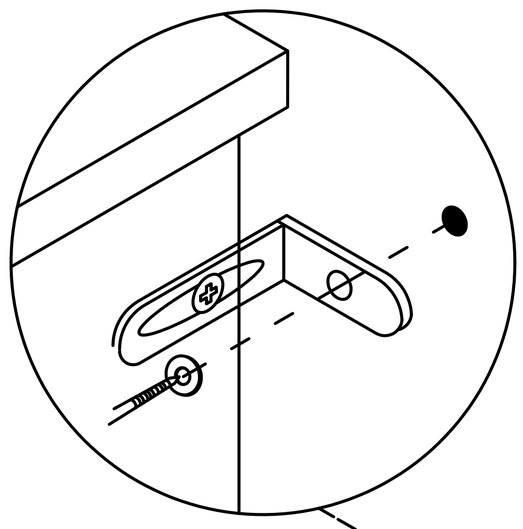

Fix the table to the wall

4x45mm

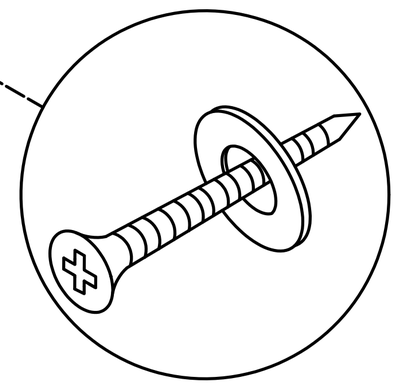

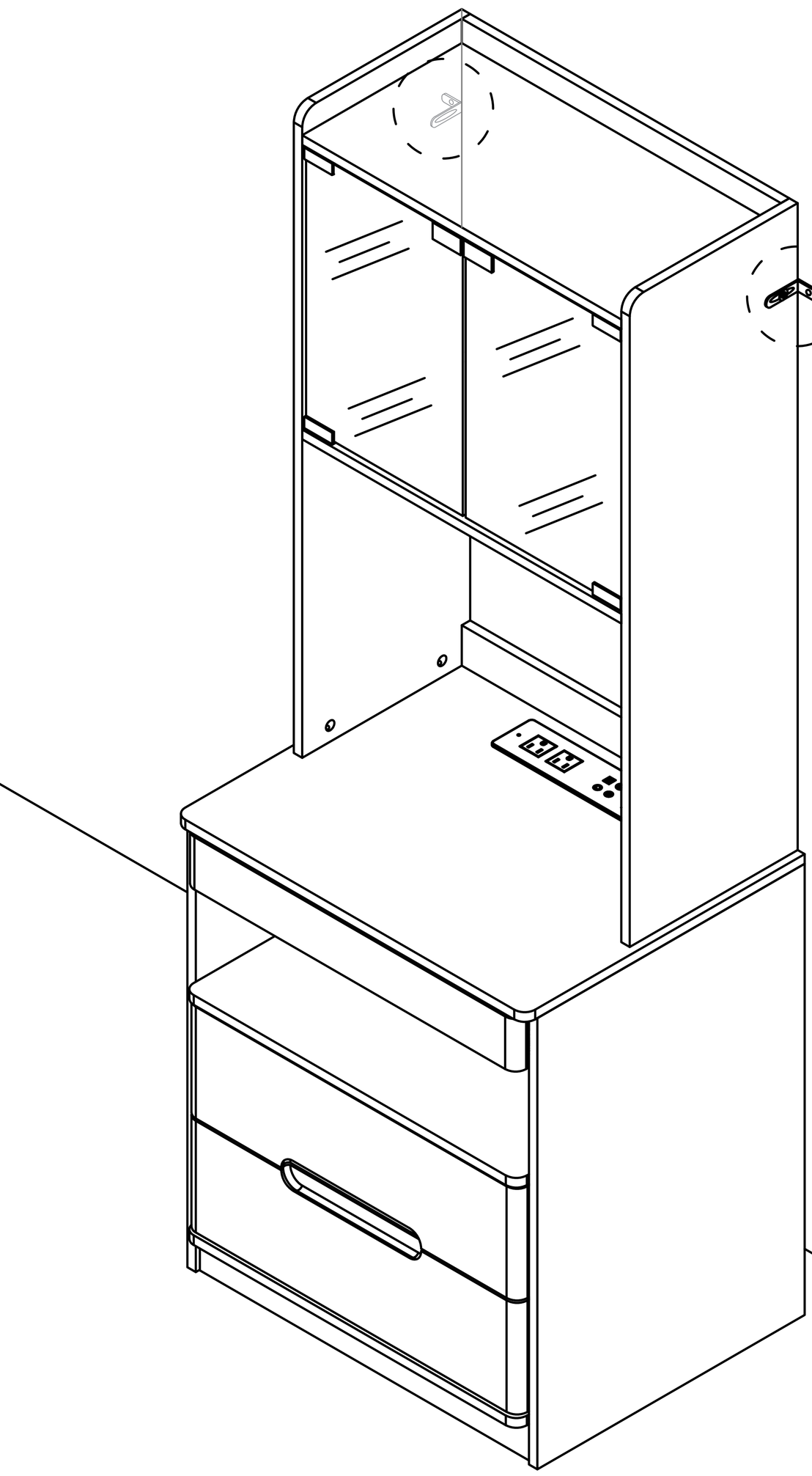

Smart Box Plug Power Off

Scan the QR code to download the app

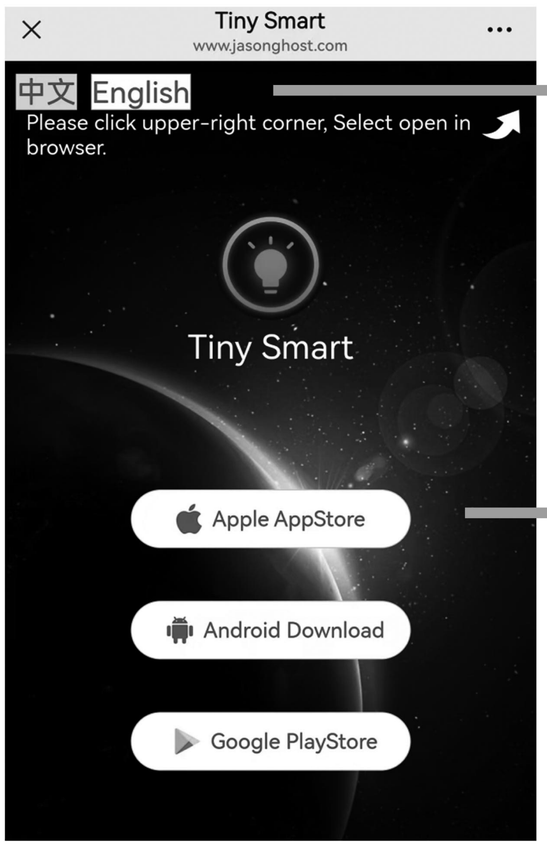

Select English Language

Select the corresponding device to download.

Note: If the download fails,

please turn off the “Enhanced Protection”

in the Pure Mode settings of the device.

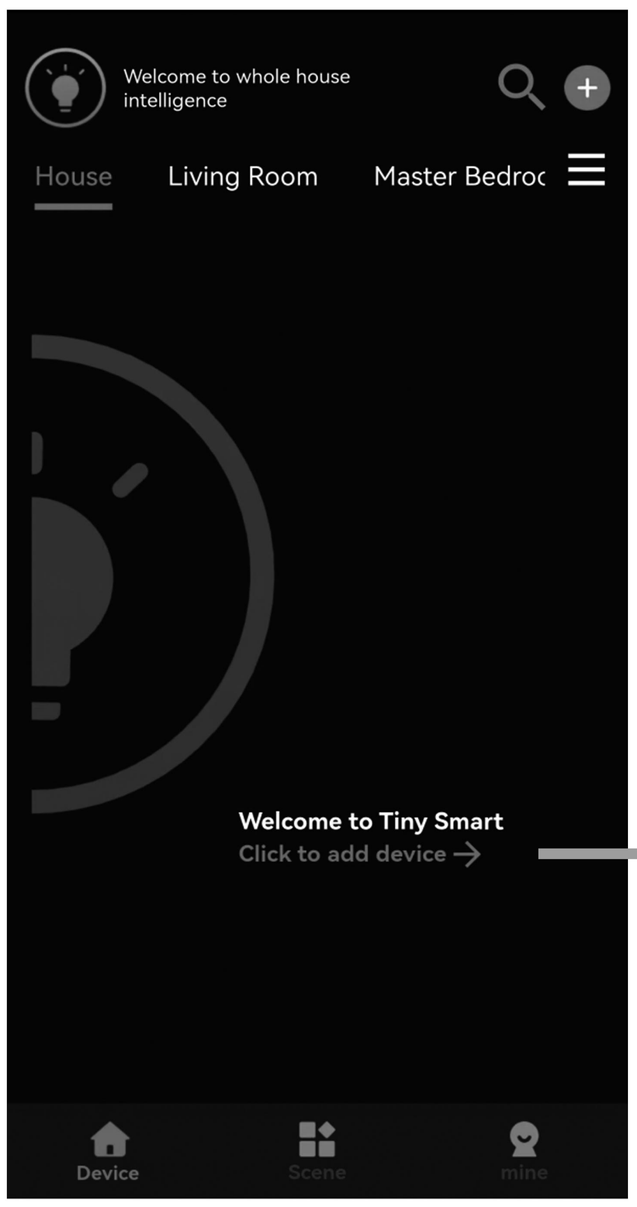

1

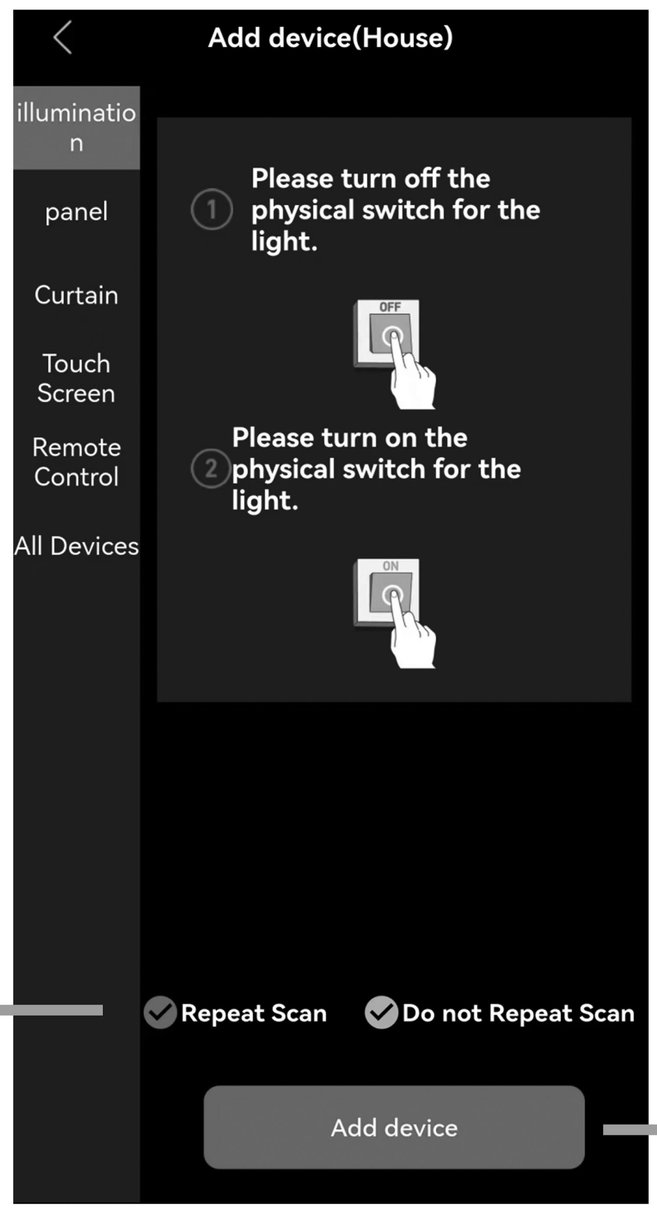

2

It turns blue after clicking

3

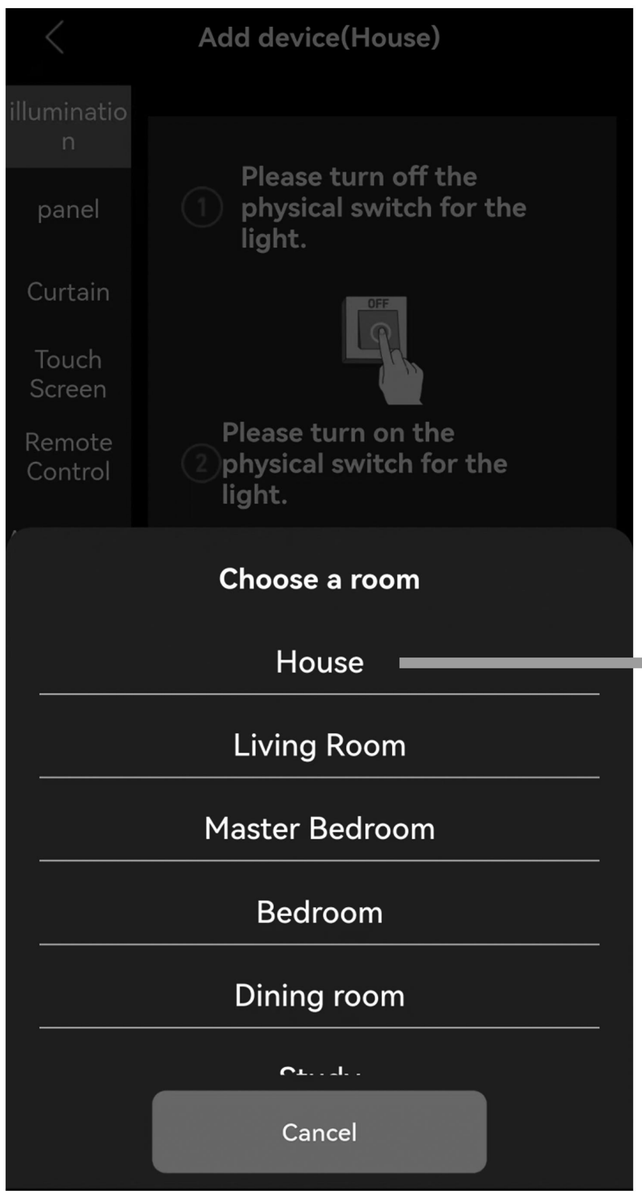

4



5 Unplug the smart box

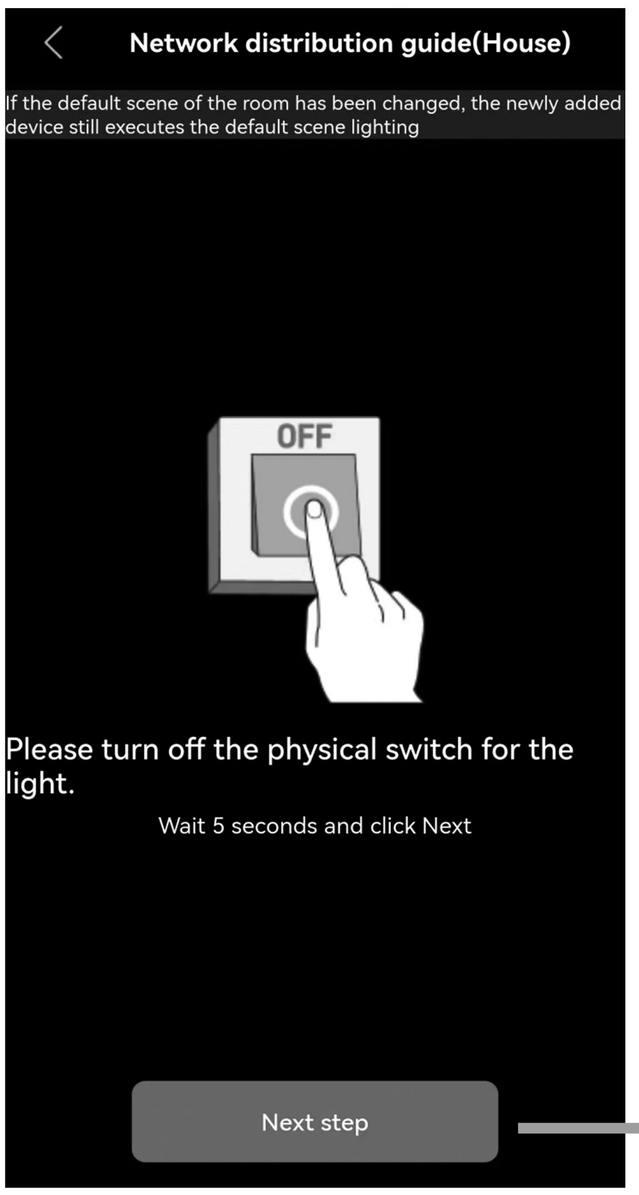

6

⑦Plug in the smart box power plug.

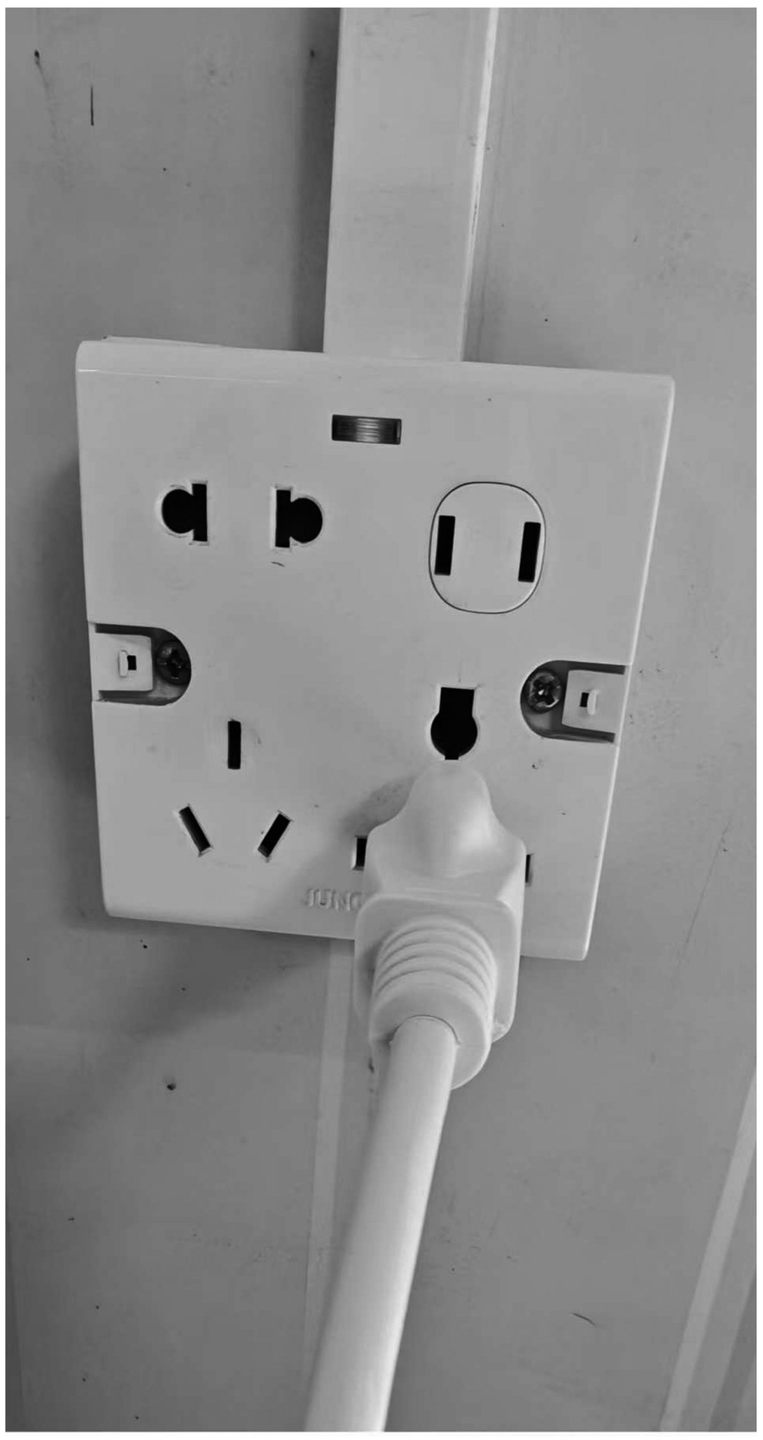

The appearance of this program icon indicates that the matching is complete

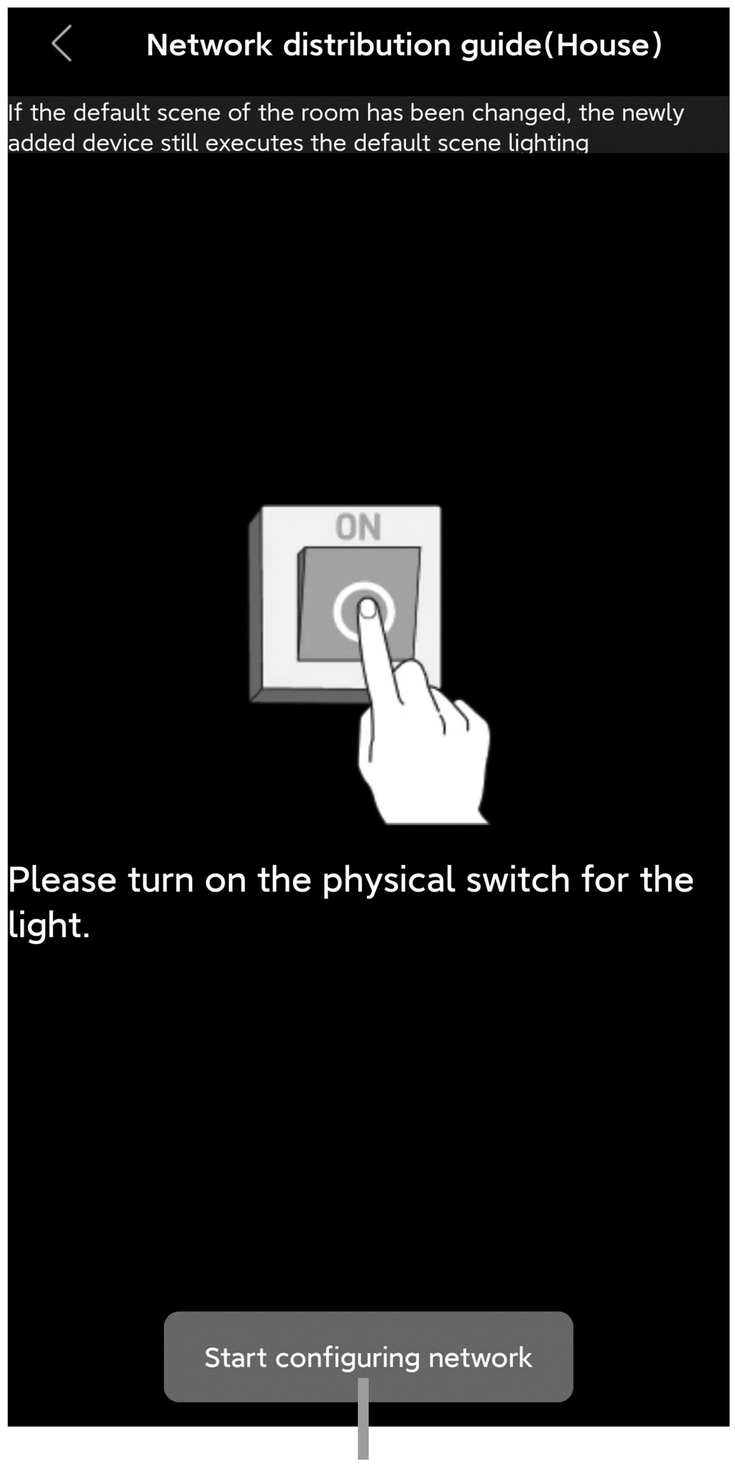

⑧

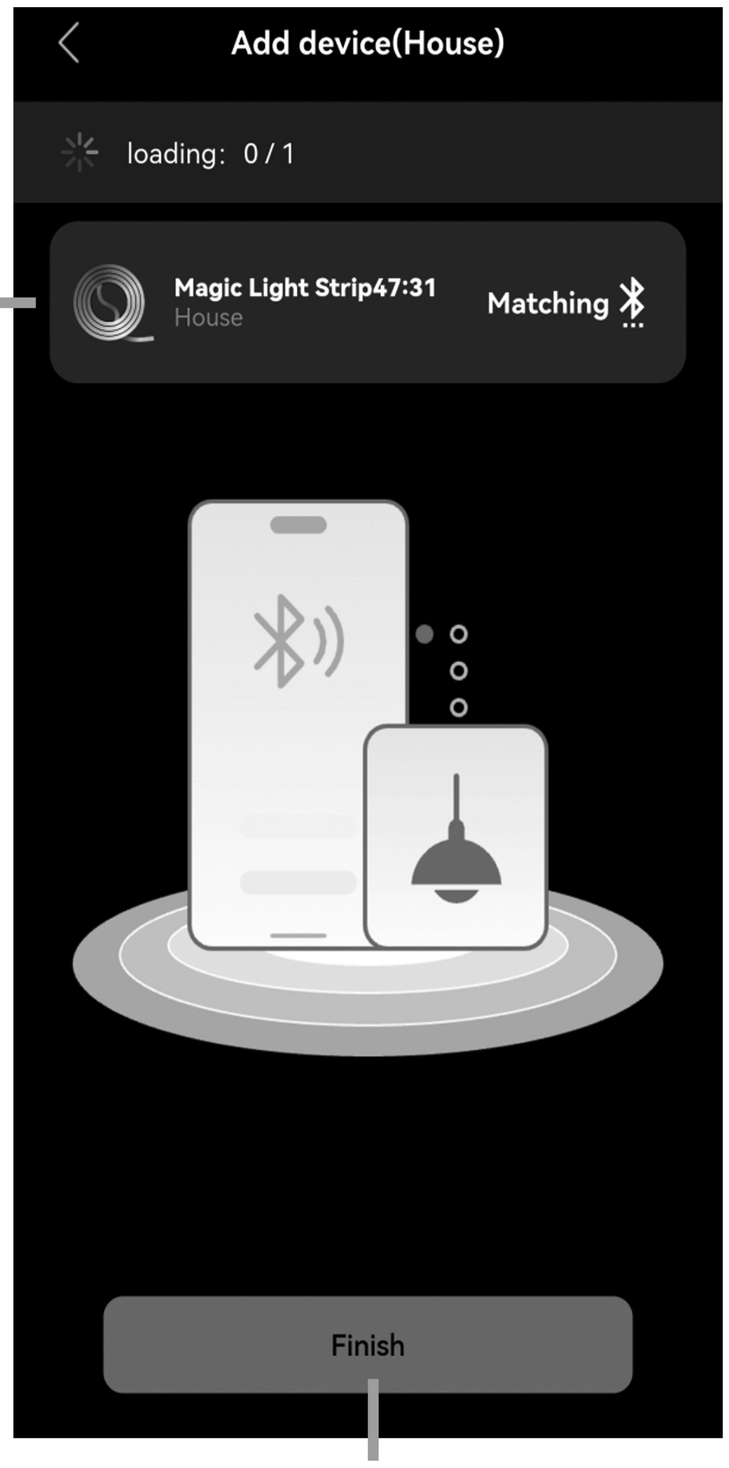

⑨

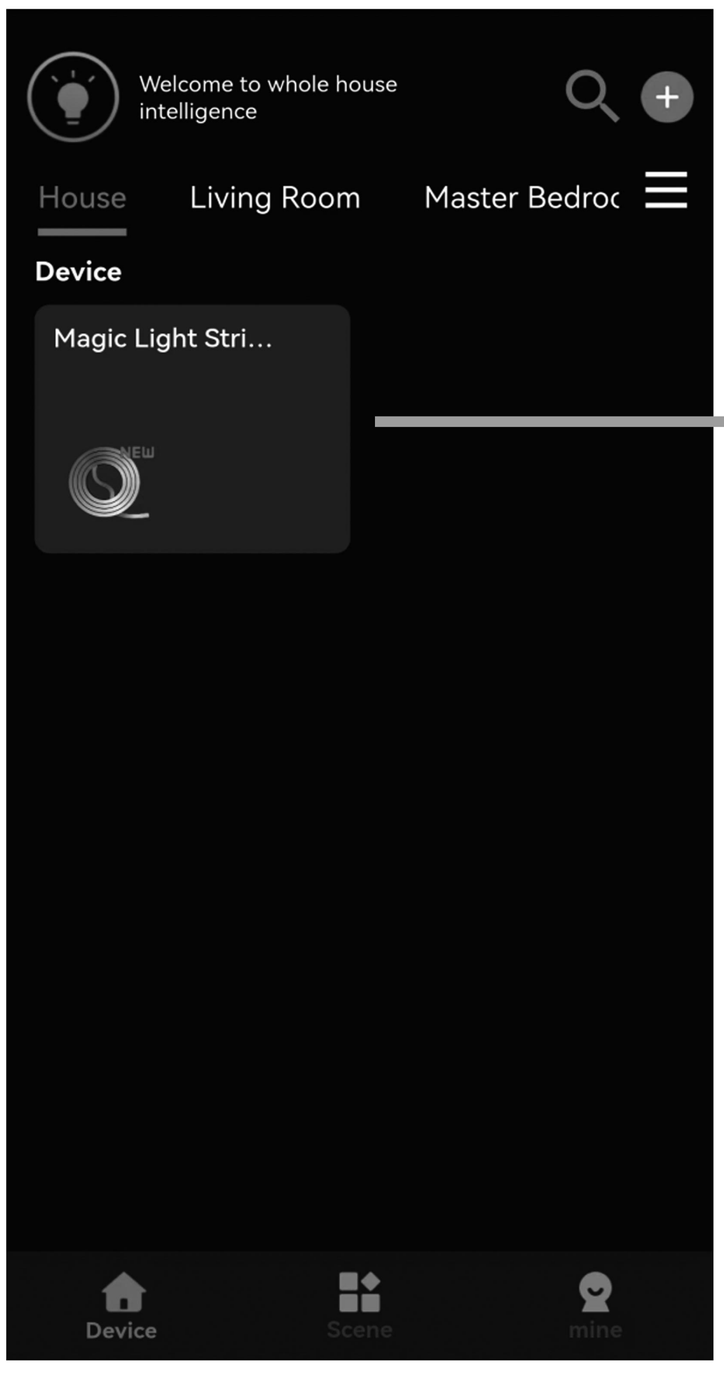

⑩

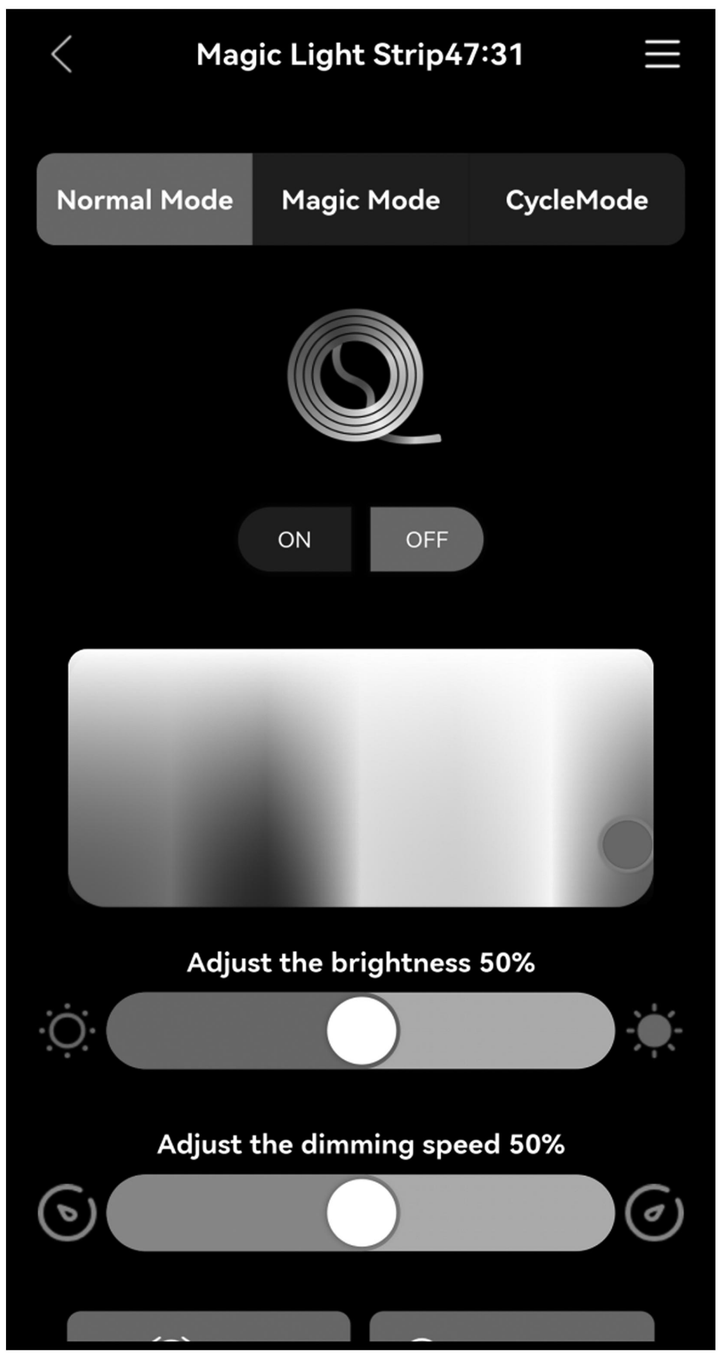

Now you can freely adjust the lighting according to your preferences



Scan code to download app

User's Guide

A31

Thank you for purchasing this product.

To use this product, please connect it to a power source.

Please use if the product works normally after connecting to power.

Introduction

The box is an intelligent controller.

It has 1 USB output port 1 Type-c port, and 2 socket outlets.

With 2 touch buttons, it can and turn ON/OFF the induction function,

turn ON/OFF the light,adjust the light luminance, and change light colors.

The lights can be controlled through both the touch buttons and a dedicated app.

Operation



This touch button is used to turn the light on/off, adjust brightness, and switch the color of the lights.

i. Single Click: Turn the light on/off.

ii. Quick Double-Click: Switch between 7 static RGB colors.

iii. Long Press (2+ seconds): Adjust the light luminance.



This touch button is used to switch dynamic phantom colors and turn ON/OFF the induction function.

i. Single Click:Switch to Phantom Mode, with 5 magical color transformations available.

ii. Human Body Sensing Control:Long Press (3+ seconds): Turn on The key press indicator light is on.)

Long Press (3+ seconds): Turn off （The key press indicator light is off.)

By default, the human body sensing is enabled upon initial power-on, and the indicator light is on.

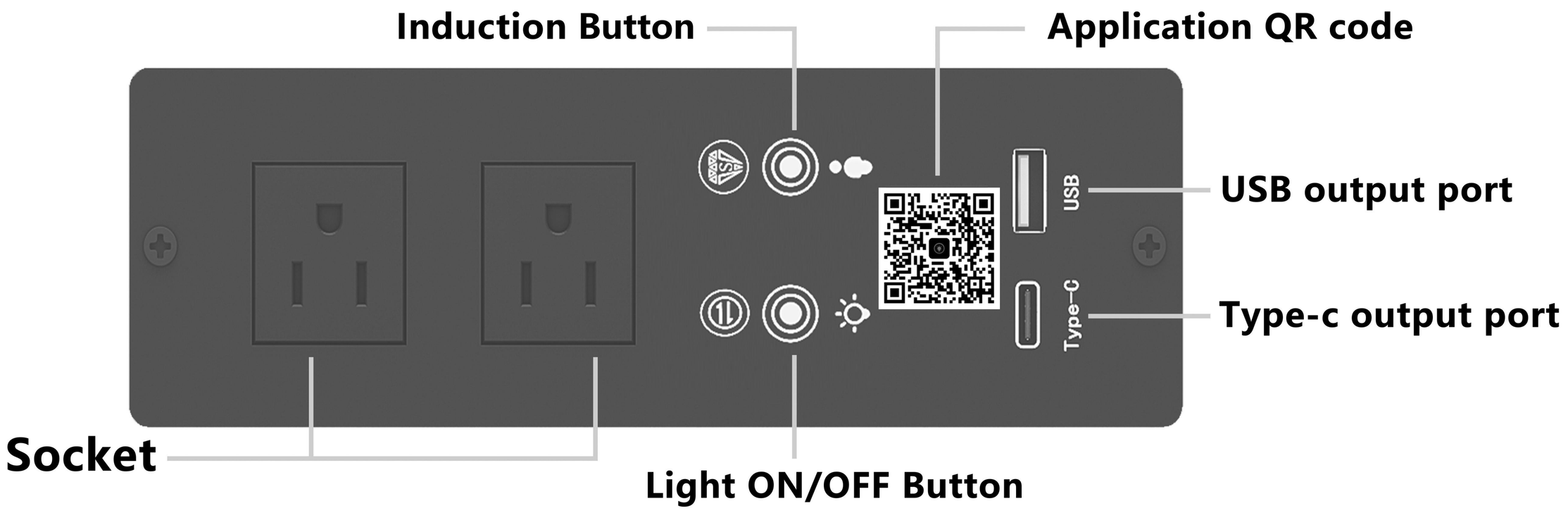

⚠ ATTENTION PLEASE

1. If there is no touch response suddenly, Re-plug the power to reset the touch static electricity.

2. If you have any questions when installing, please feel free to contact us. Thank you.