SERA BATHROOM DESIGNS

# AL48WAL

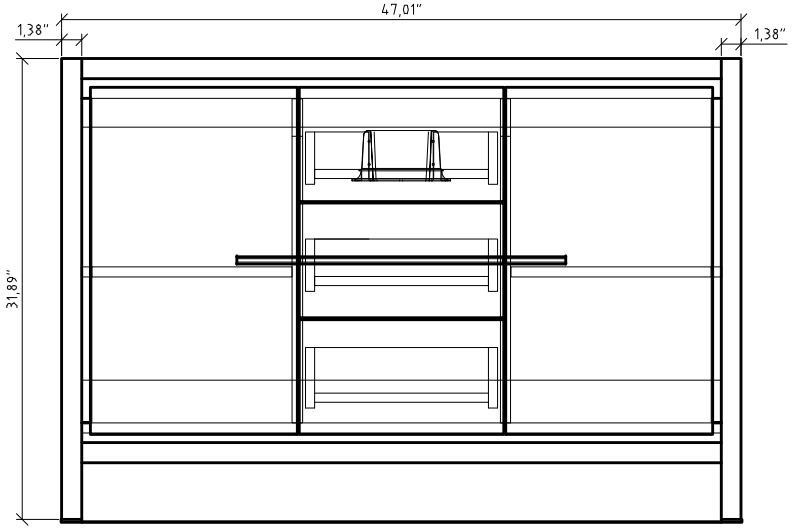


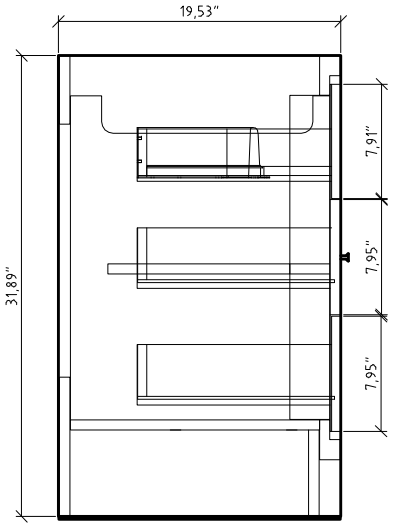


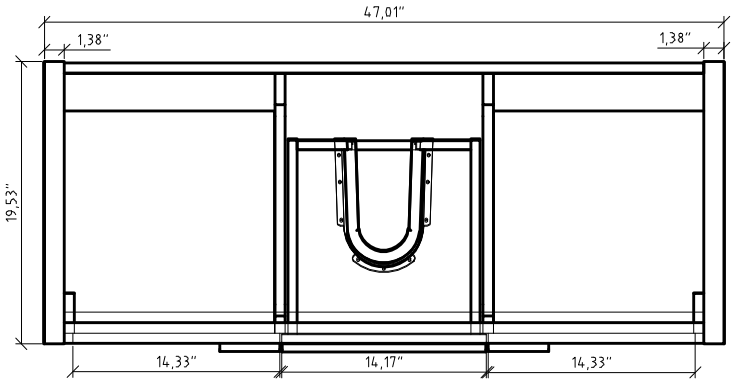


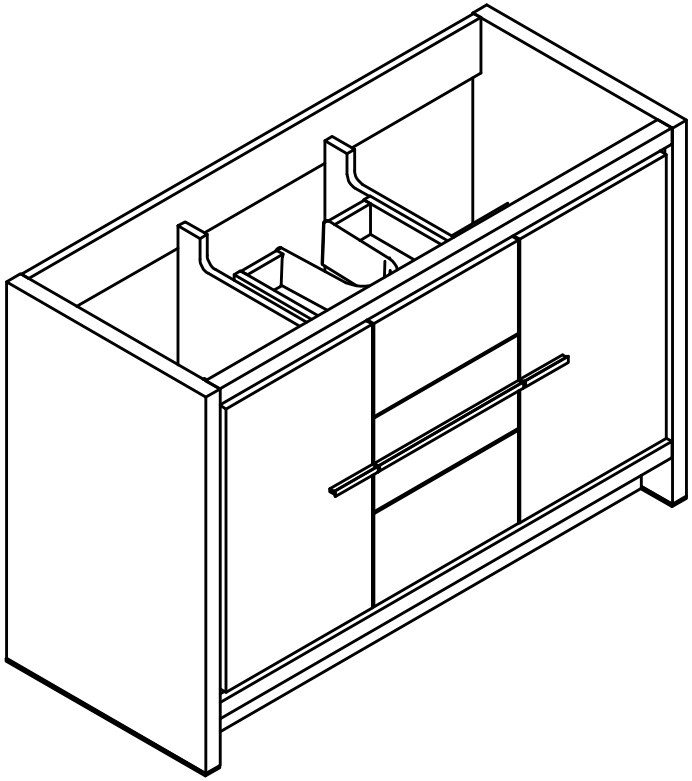

# AL-48WND

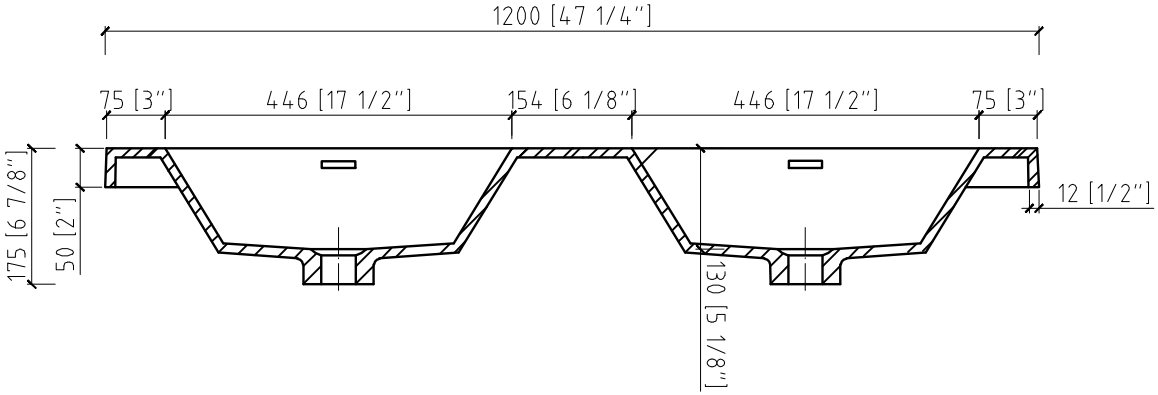


SECTION B-B

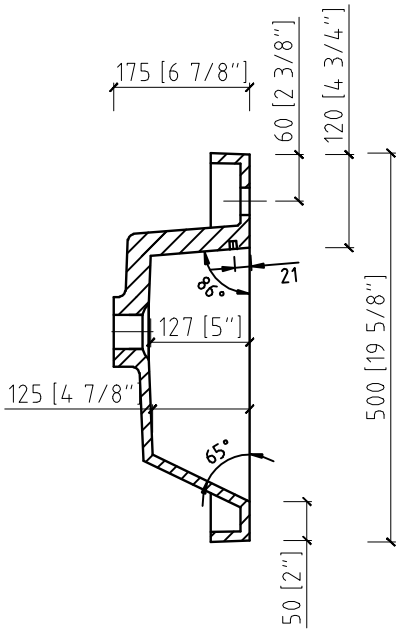


SECTION A-A

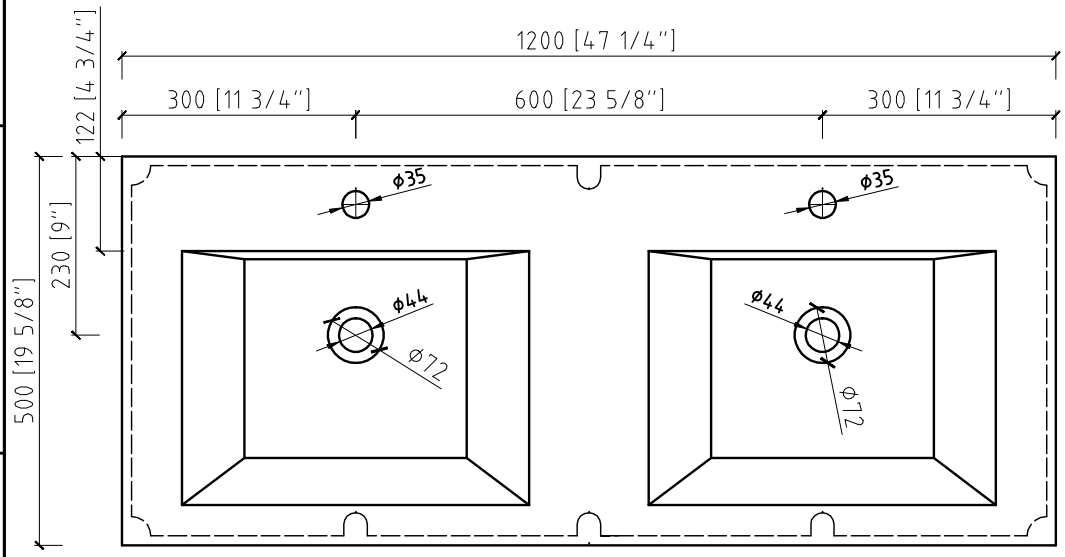


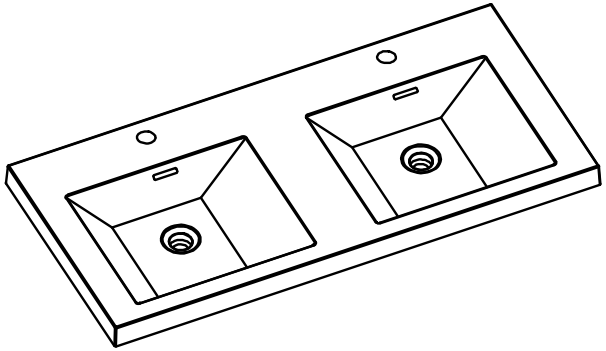

SERA BATHROOM DESIGNS