Assembly Instructions

Caution : You must read this before you proceed

Care & Maintenance



- Not for commercial use. For residential use only.



- Furniture may scratch floors. We recommend using furniture pads to protect your floors.



- Do not put hot items directly on furniture surface.



- Do not clean furniture with harsh cleansers or polish.



- Do not place furniture under direct sunlight.



- Do not place furniture near heating or cooling vents.



- Do not write on furniture without a padded barrier to protect the surface.



- Do not place furniture outside . For indoor use only.



- Stains may be removed with mild soap solution and damp cloth.



- Children should not climb or jump on the furniture.



- Dust and pick-up spills using a clean, non-colored, lint-free cloth.

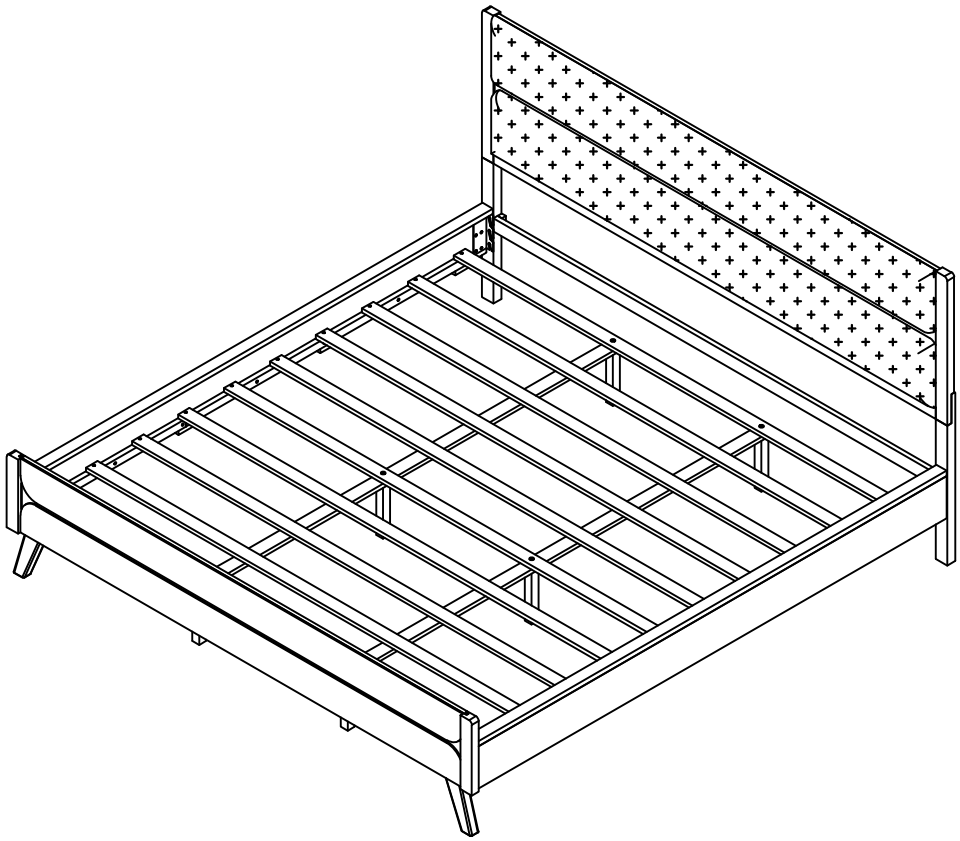
Please see the bed section to find the hardware and bed leg.

Sets often ship in multiple boxes and may arrive a day or two apart.

KING BED
N761P556502

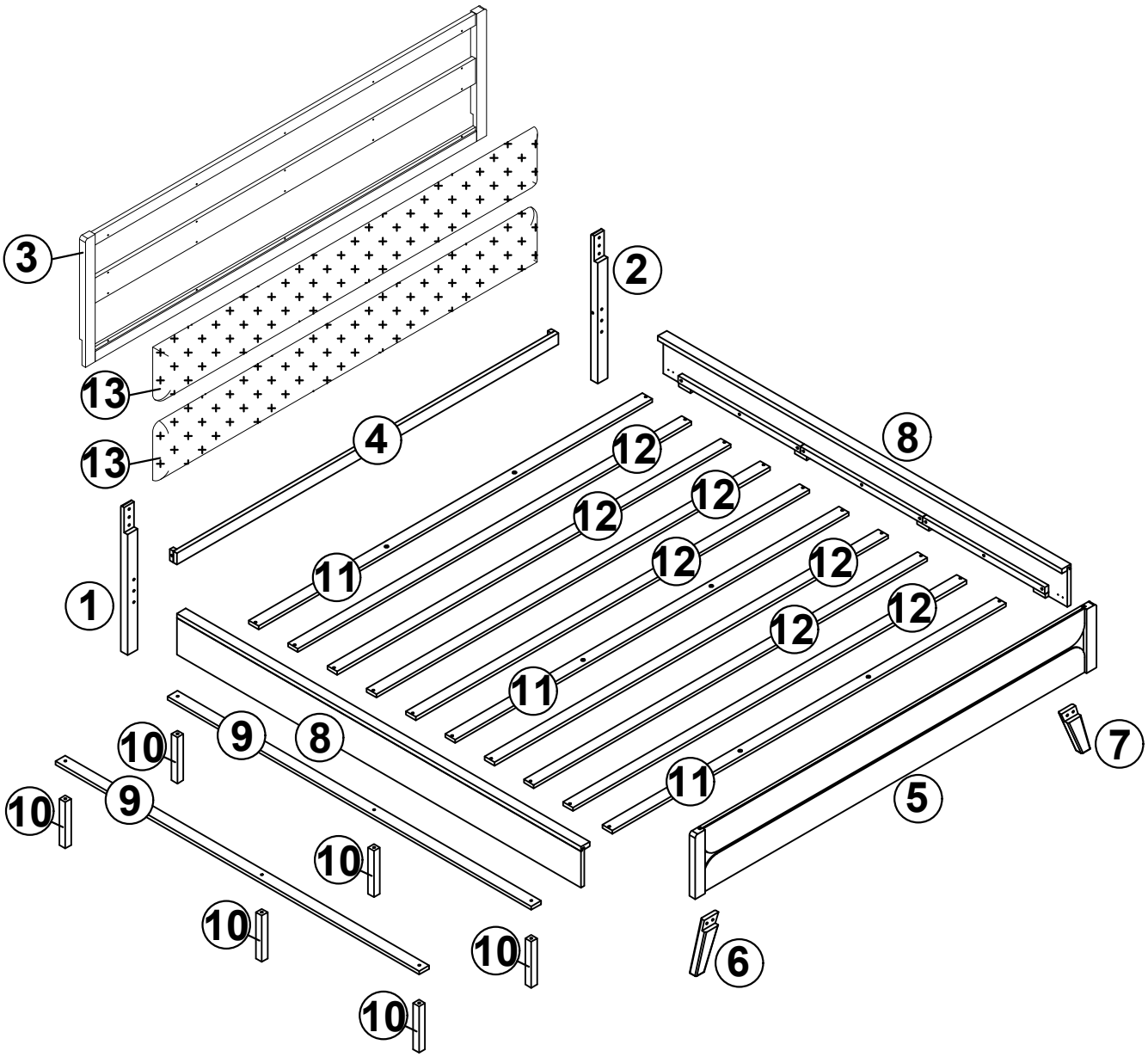
! WARNING !

STRANGGULATION HAZARD
NEVER place bed near windows where cords from blinds or drapes may strangle achild.
NEVER suspend strings over bed.
NEVER place items with astring, cord, or ribbon, such as hood strings or pacifercords, around a child's neck. These items may catch on bed parts.
ALWAYS follow assembly instructions.
Not intended for children under the age of six. INFANTS HAVE DIED FROMBECOMING ENTRAPPED IN BEDs. Openings in and between bed parts can entrapthe neck and head of a small child.
NEVER use bed for child under the age of six.
The mattress must be appropriately sized for the bed. If the mattress is undersizeddangerous gaps can exits and a person can become entrapped or entangled in the frame and suffocate
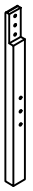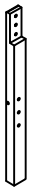
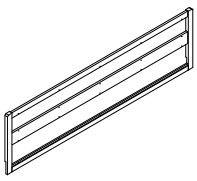
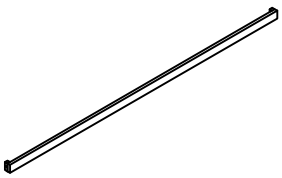
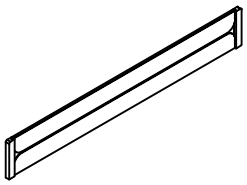
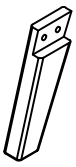
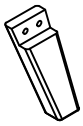
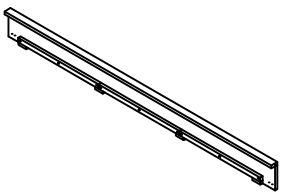
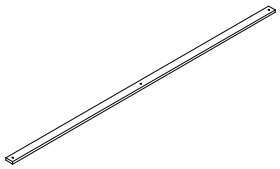
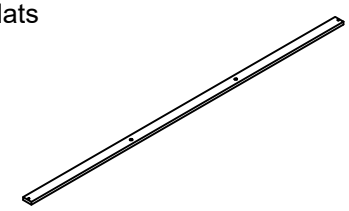
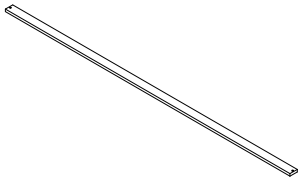
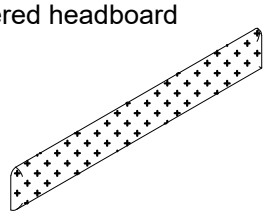


CAUTION: This King Bed is NOT a TOY.
Keep your child / children at bay in the process of assembly.
For turning the King Bed and to prevent damage to the King Bed.
02 persons may be needed to execute this action.

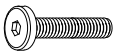
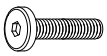
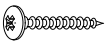
DETAIL VIEW



PARTS LIST: N761P556502

①	Leg - left (Headboard) 	1PC
②	Leg - right (Headboard) 	1PC
③	Headboard frame 	1PC
④	Lower - Horizontal bar (Headboard) 	1PC
⑤	Footboard frame 	1PC
⑥	Leg - left (Footboard) 	1PC
⑦	Leg - right (Footboard) 	1PC
⑧	Side Rails 	2PCS
⑨	Middle support bar 	2PCS
⑩	Middle legs 	6PCS
⑪	Outer slats 	3PCS
⑫	Slats 	7PCS
⑬	Upholstered headboard 	2PCS

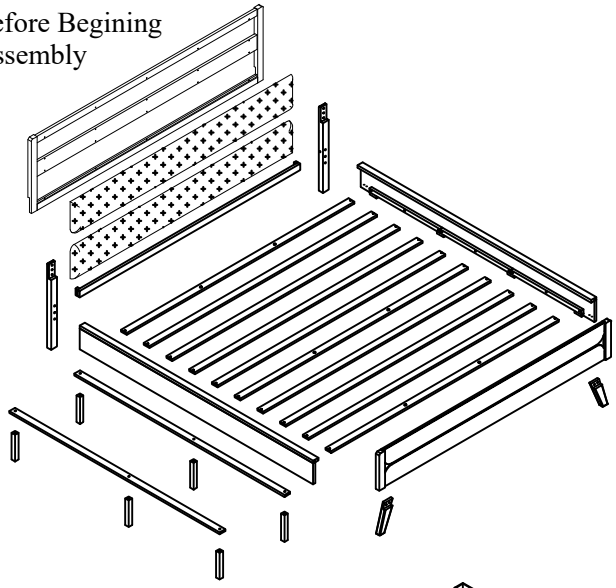
Hardware (Each of the above hardware Including exxtra 1 pc)

Label	Picture	Description	Q.ty
A		Bolts Ø1/4 x 55mm	6+ 1
B		Bolts Ø1/4 x 30mm	2 + 1
C		Bolts Ø1/4 x 25mm	10 + 1
D		Bolts Ø1/4 x 20mm	12 + 1
E		Wood screws M4 x 25	20 + 1
F		L-brackets 30x58x141	2
G		R-brackets 30x58x141	2
H		Allen Wrench	1
J		Round head screws M4 x 15	24+1
K		Round head screws M4 x 25	20+1

HARDWARE LIST: N761P556502

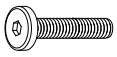
Assembly Preparation

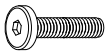
Before Begining Assembly



 *6 + 1

 *2 + 1

 *10 + 1

 *12 + 1

 *20 + 1

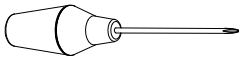
 *2

 *2

 *24+1

 *20+1

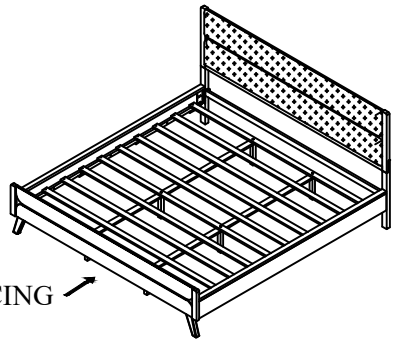
 *1



ASSEMBLY TOOLS REQUIRED (NOT INCLUDED)

- Read instructions, cover to cover-
- Have 2 adults on hand for assembly-
- Do not assemble on flooring or carpet-
- Assemble on a clean non-marring surface (packing foam)-
- Save all packaging until finished-

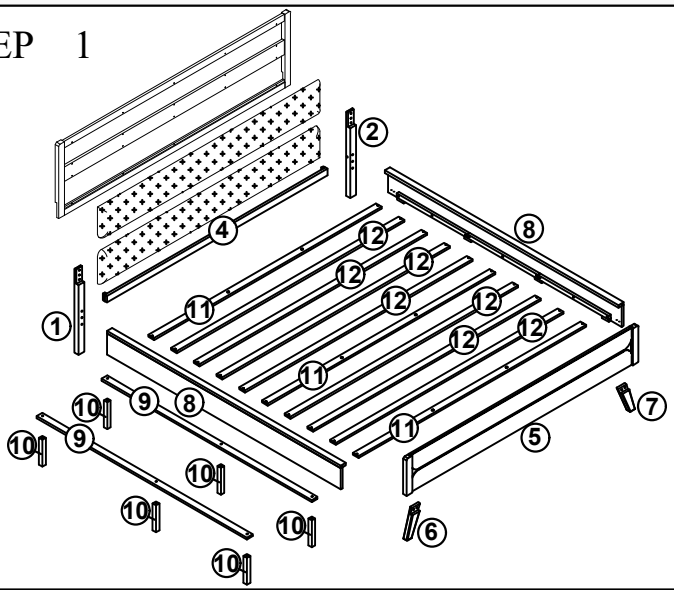
Overview



FRONT FACING

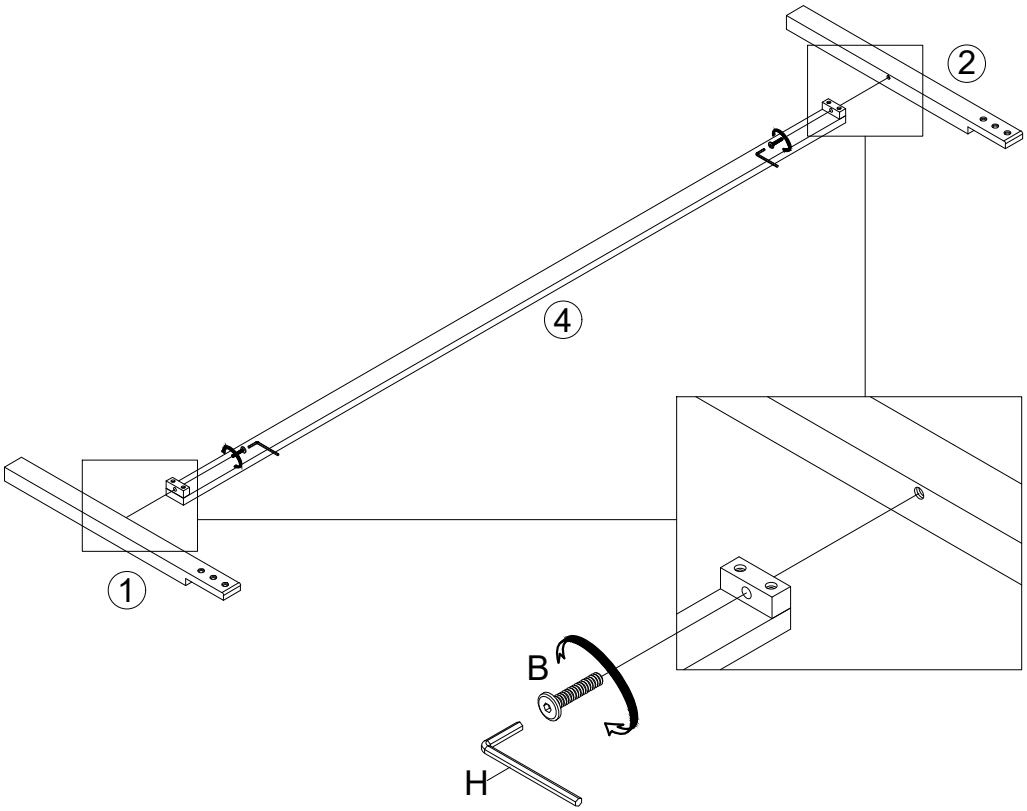
This bed has multiple parts and may require up to some 1 hour to assemble.
To give you an overview of the bed parts, the above picture is to help you put the various parts into perspective .
Please read through the instructions here below to familiarise the parts and steps before assembly.

STEP 1



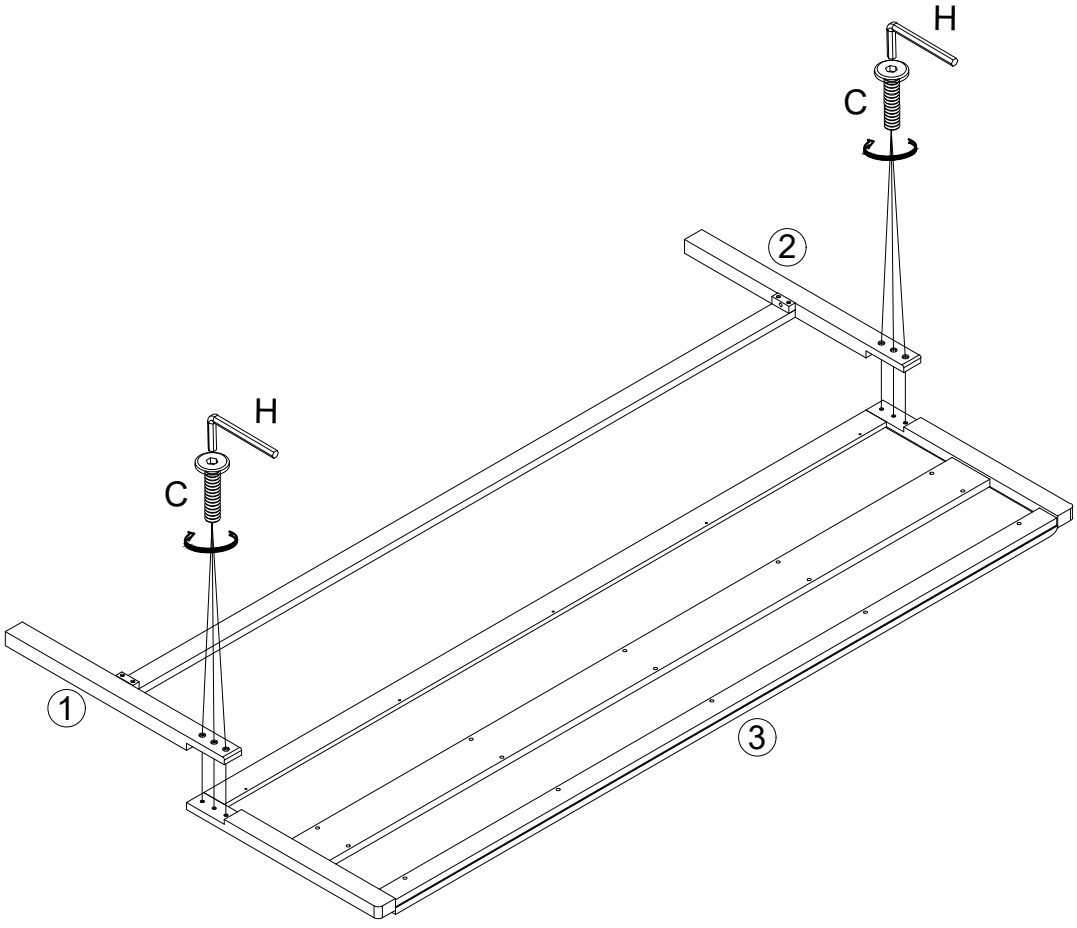
Unpack and place all part on a clean, non-marring surface.

STEP 2



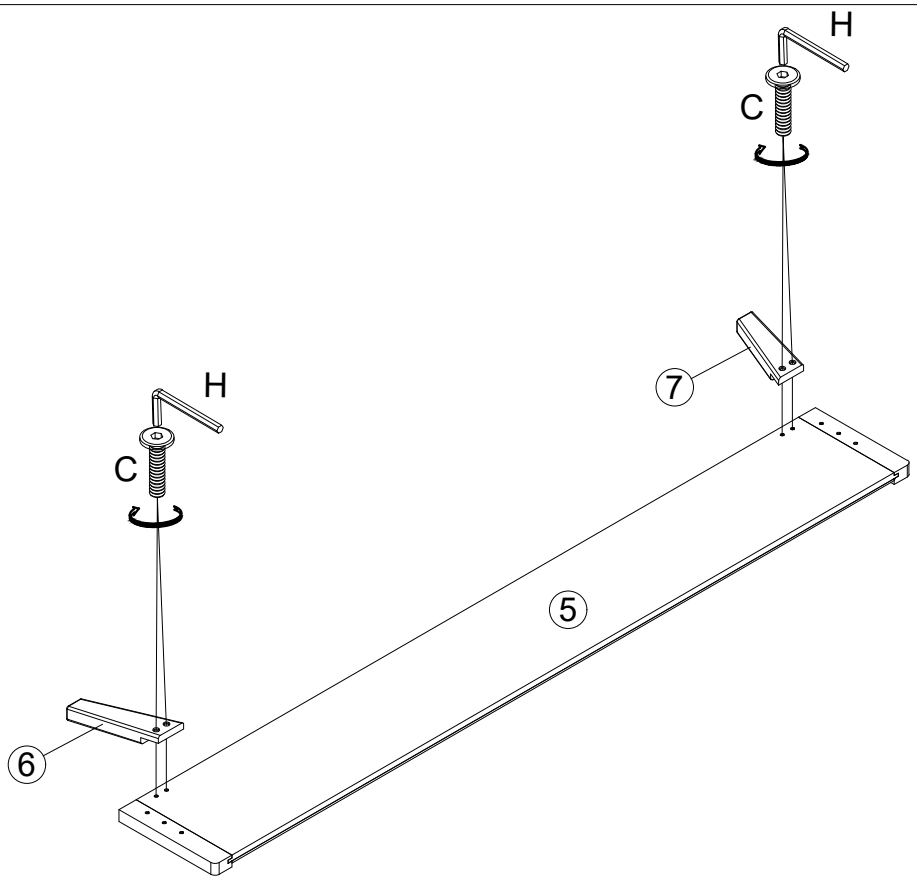
Attach Leg - left (Headboard)①and Leg - right (Headboard)②to Lower - Horizontal bar (Headboard)④using 2 Bolts Ⓑand tighten them with Allen Wrench Ⓗ.

STEP 3



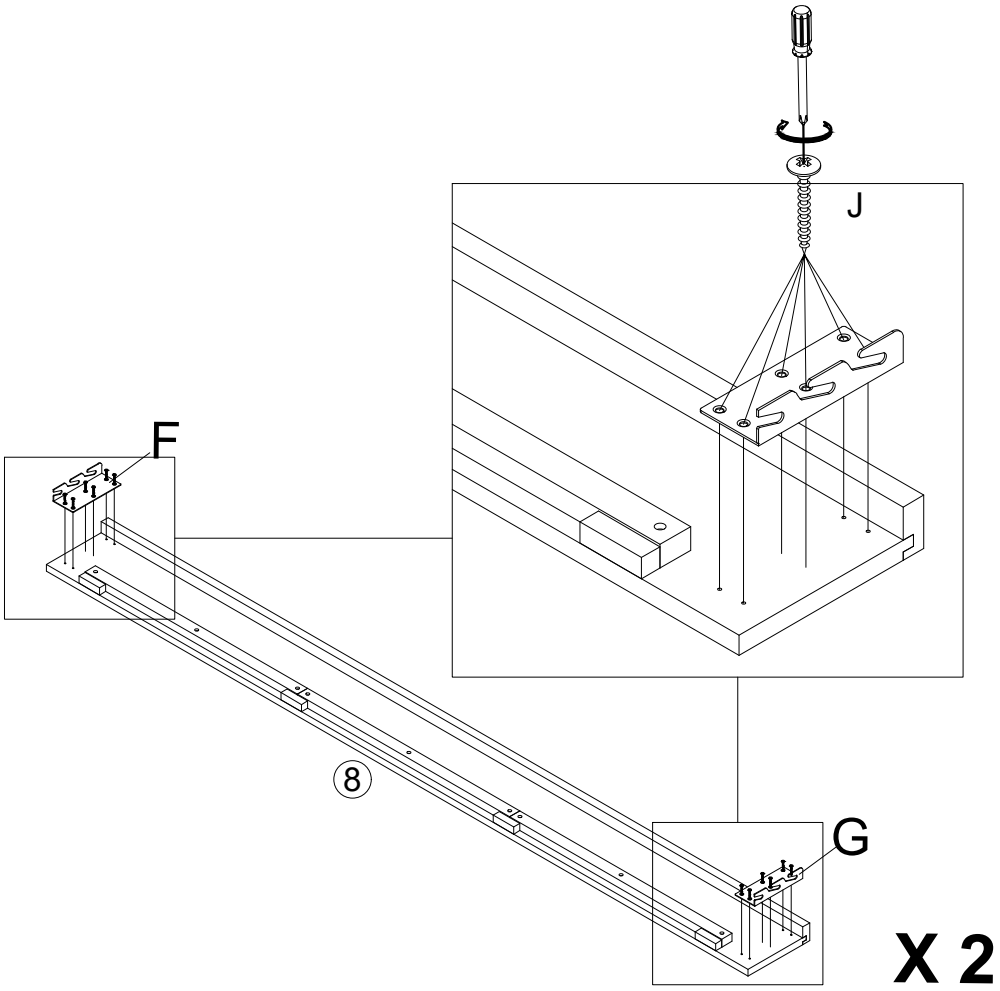
Attach Leg - left (Headboard)①and Leg - right (Headboard)②to Upholstered headboard frame③ using 6 Bolts Ⓒand tighten them with Allen Wrench Ⓗ.

STEP 4



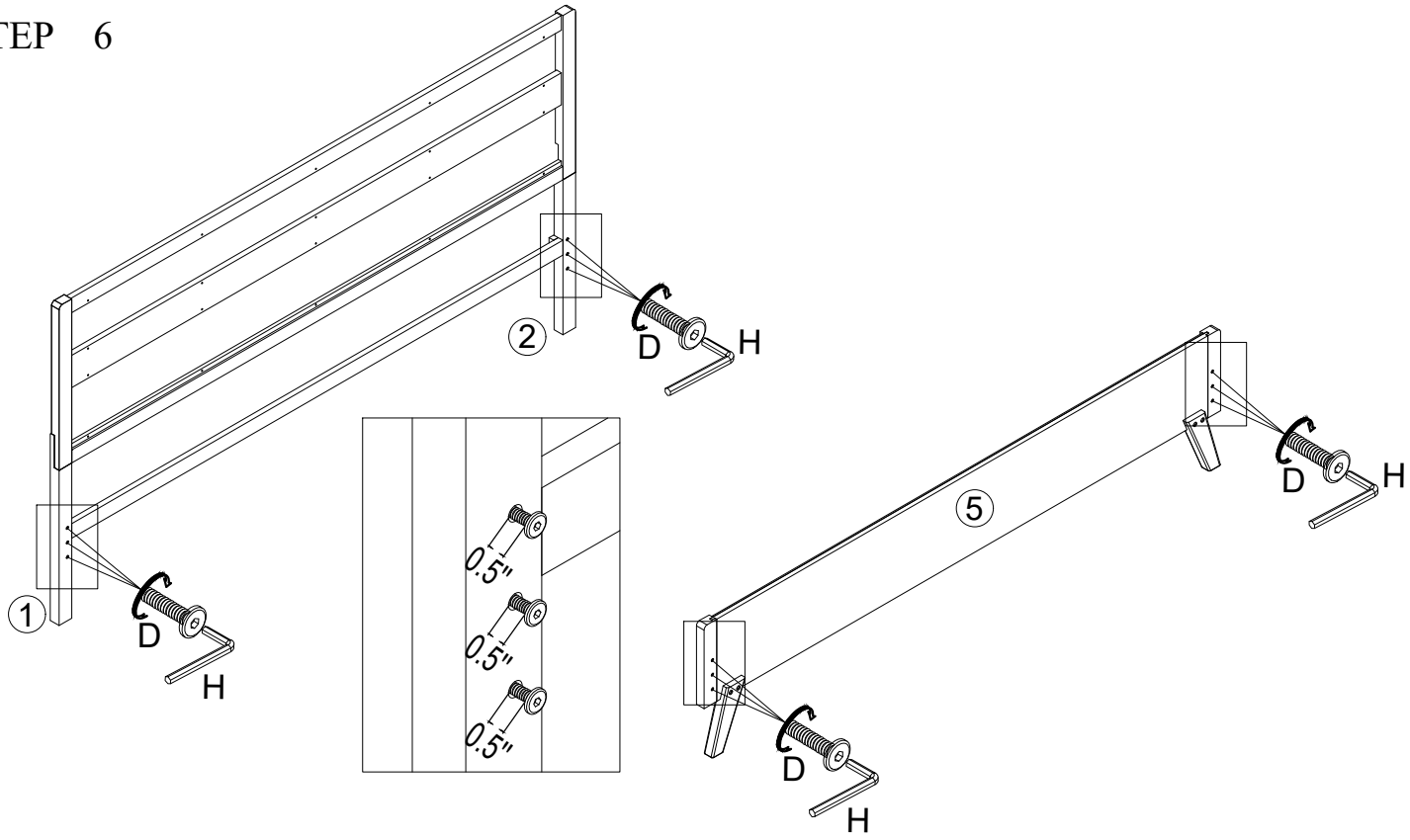
Attach Leg - left (Footboard)⑥and Leg - right (Footboard)⑦to Footboard frame⑤using 4 Bolts Ⓒ and tighten them with Allen Wrench Ⓗ.

STEP 5



Attach L-brackets Ⓕand R-brackets Ⓖto Side Rails⑧and secure using 12 Round head screws Ⓙ. **Install exactly as shown in the figure. X2**

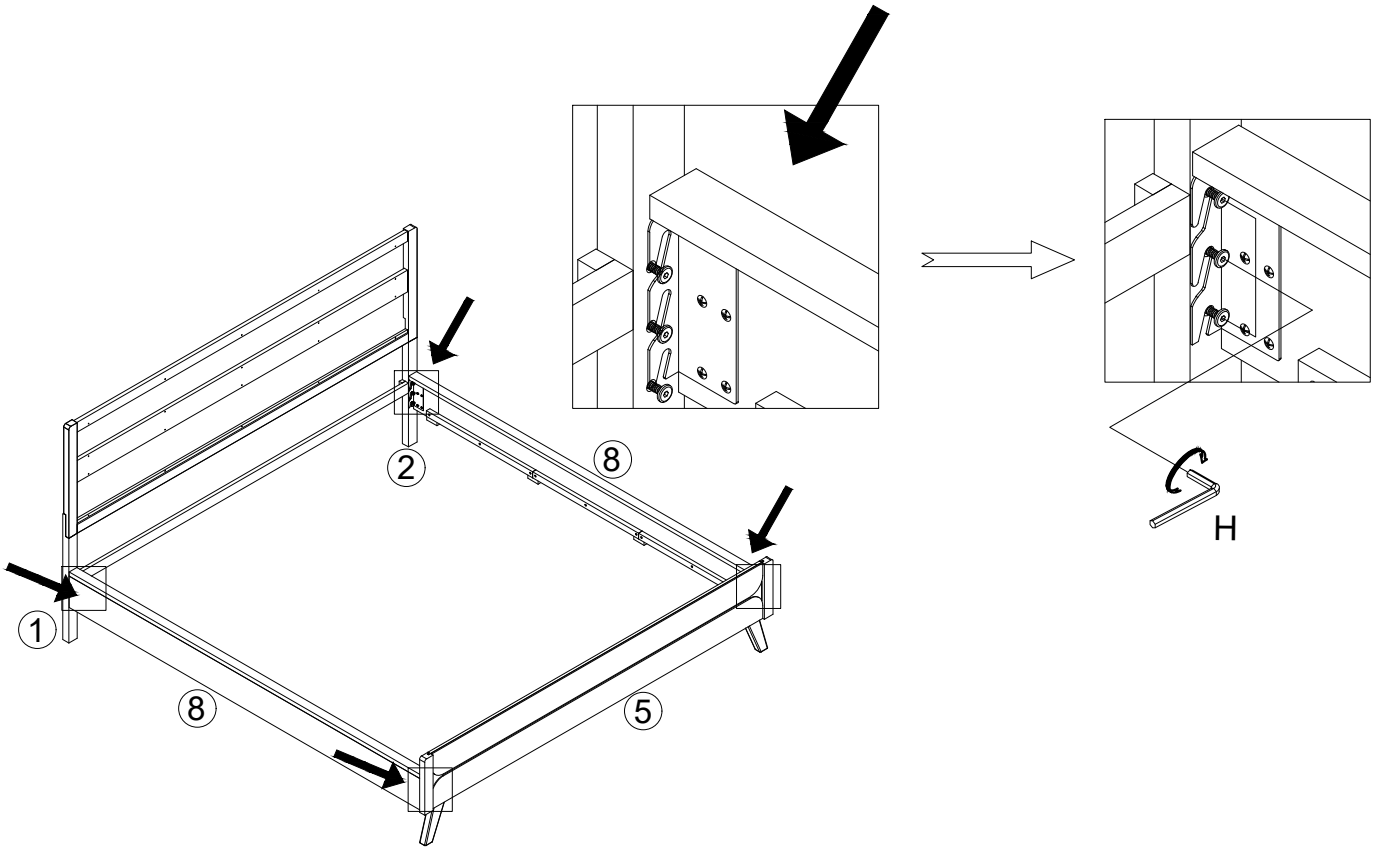
STEP 6



Attach 6 Bolts Ⓓ into Leg - left (Headboard) ① and Leg - right (Headboard) ②, and 6 Bolts Ⓓ into Footboard frame ⑤.

! *Note: Do not overtighten; leave 0.5 inch of thread clearance.*

STEP 7



Slide the L-brackets Ⓕ and R-brackets Ⓖ of Side Rails ⑧ downward into the bolts on Leg - left (Headboard) ① and Leg - right (Headboard) ② and Footboard frame ⑤ until the slots engage securely. Then, use a Allen Wrench Ⓗ to securely tighten the bolts from *Step 6*.

STEP 8

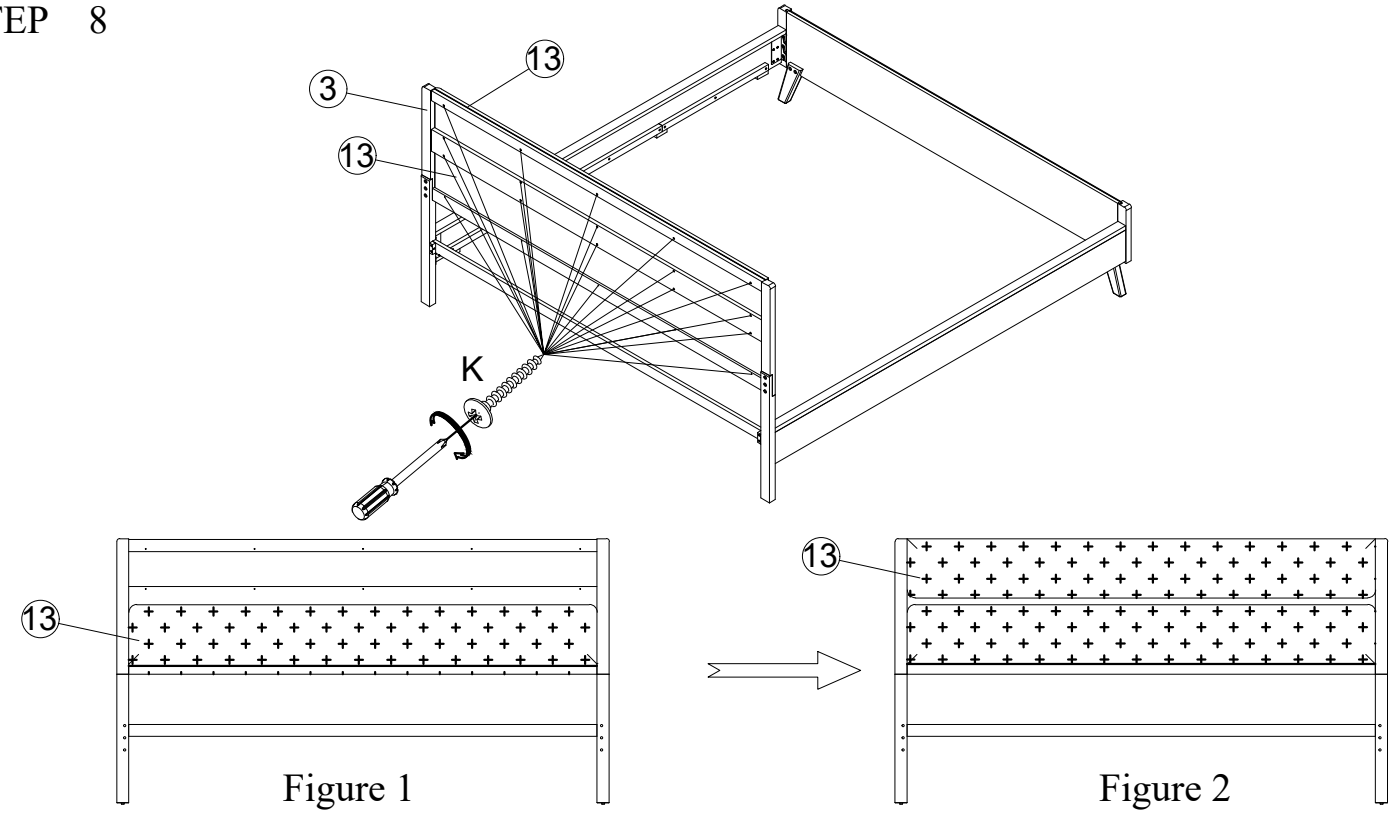
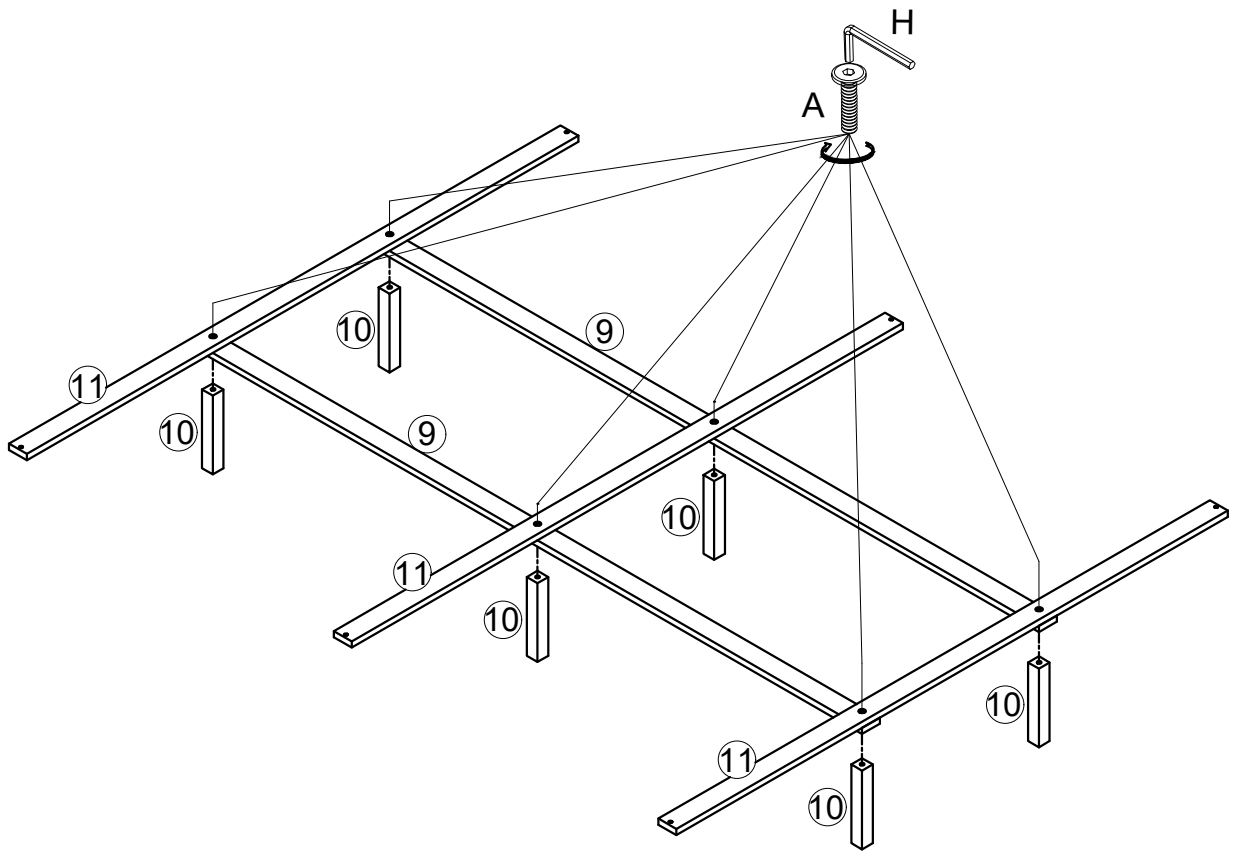


Figure 1 Figure 2

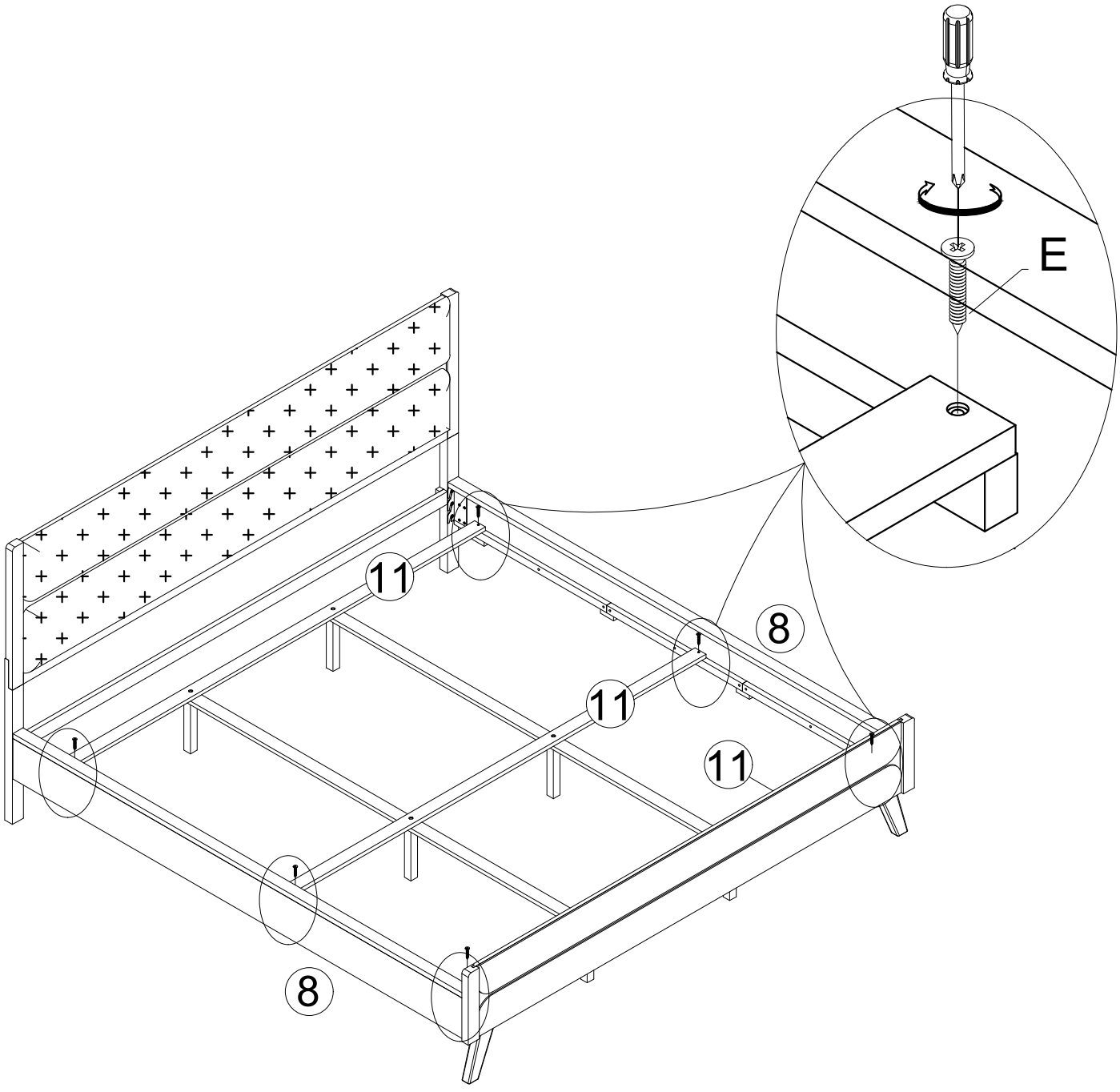
Place Upholstered headboard ⑬ onto Headboard frame ③ in the correct order, ensuring the end with the rounded corner (R-edge) is positioned correctly. Then, securely tighten it using 10 Wood screws Ⓚ as in Figure 1. Similarly, assemble the other Upholstered headboard ⑬ section as shown in Figure 2.

STEP 9



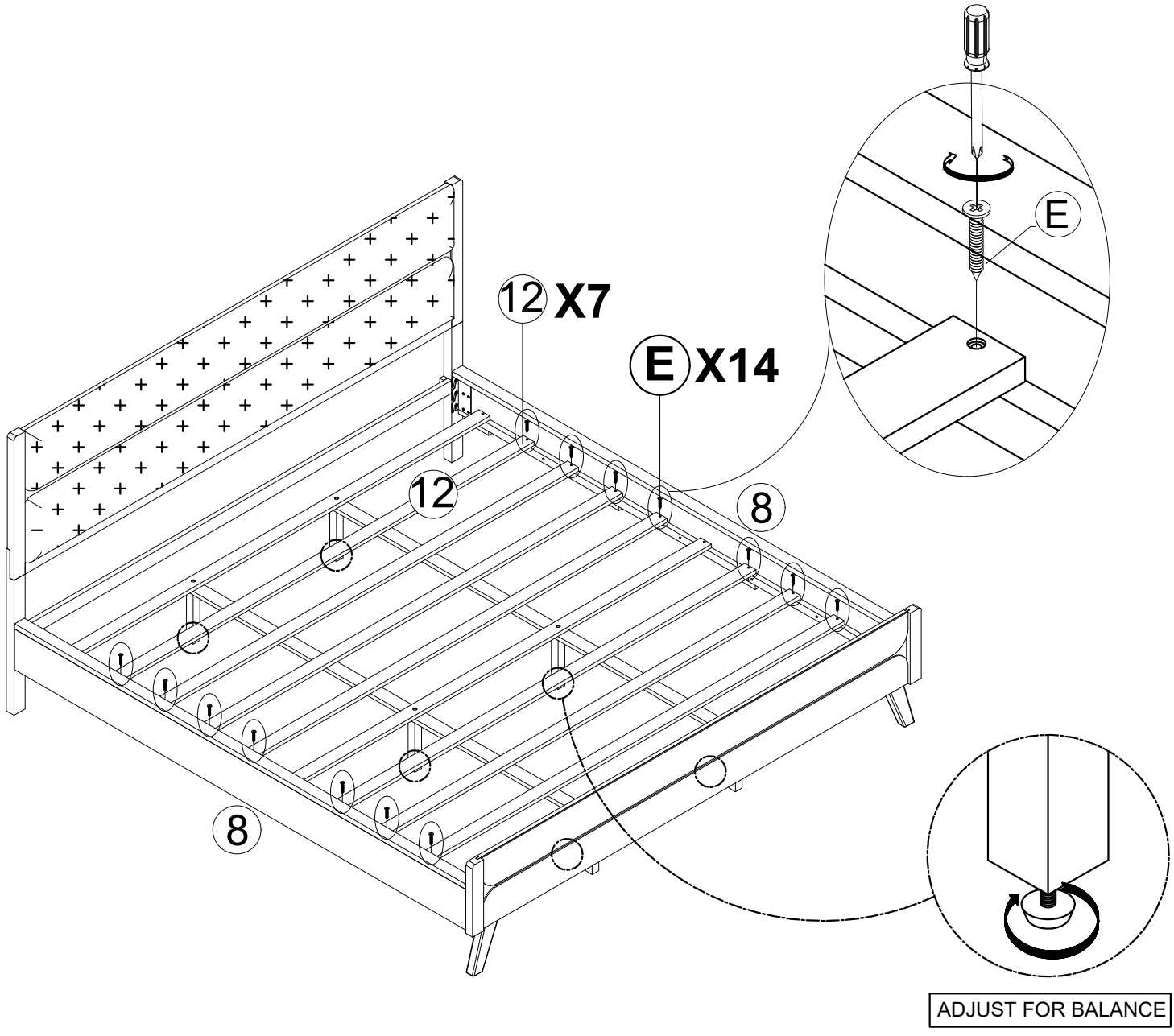
Attach 3 pcs Outer slats ⑪ and the Middle support bar ⑨ to the 6 pcs Middle legs ⑩ using 6 pcs Bolts Ⓐ and Allen Wrench Ⓗ to tighten them.

STEP 10



Place the Outer slats ⑪ onto the Side Rails ⑧ and secure using 6 Wood screws Ⓔ to tighten them.

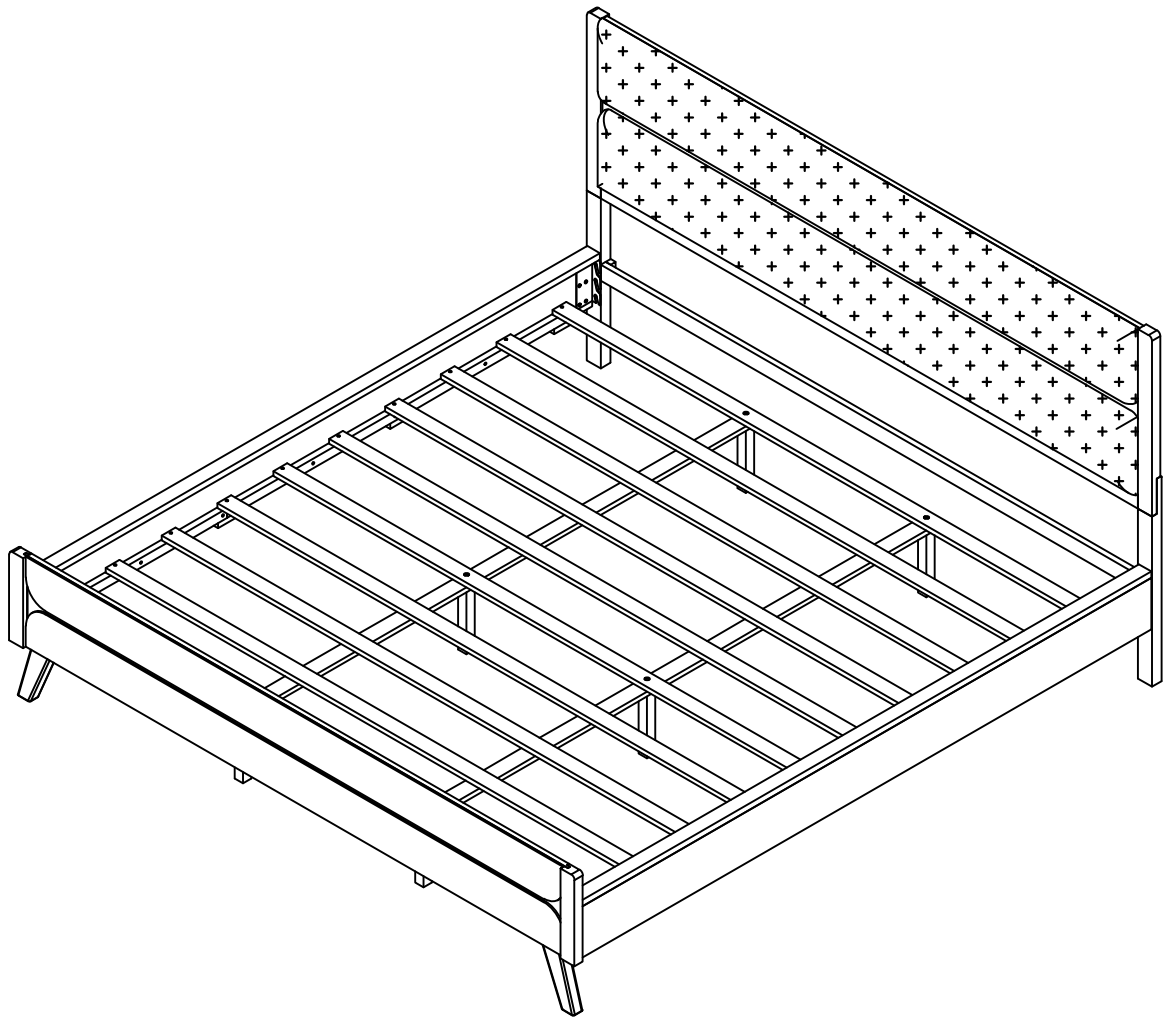
STEP 11



Attach 7 pcs Slats (12) to Side Rails (8) in the correct spacing using 14 pcs Wood screws (E) to tighten them.

NOTE : that the middle leg can be adjusted to suit the position of your floor.

COMPLETED



Inspect the Bed an make sure all parts are adequately connected.
Adjust the Levelers to desired height to avoid wobbles.
Your bed is ready for use.

CARE INTRUCTIONS:
Hardware may loosen overtime. Periodically check that all connections are tight.
Wipe with a soft , dry cloth . To protect finish , avoid the use of chemicals and household cleaners.