10

16X20FT Carport

SKU:PXYYOT357

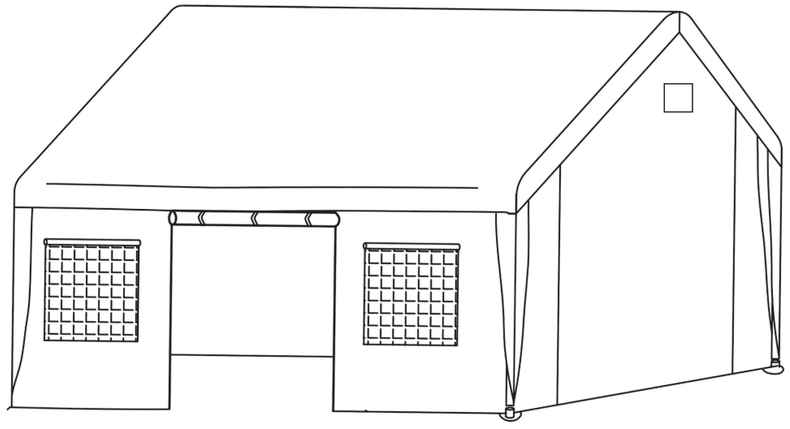

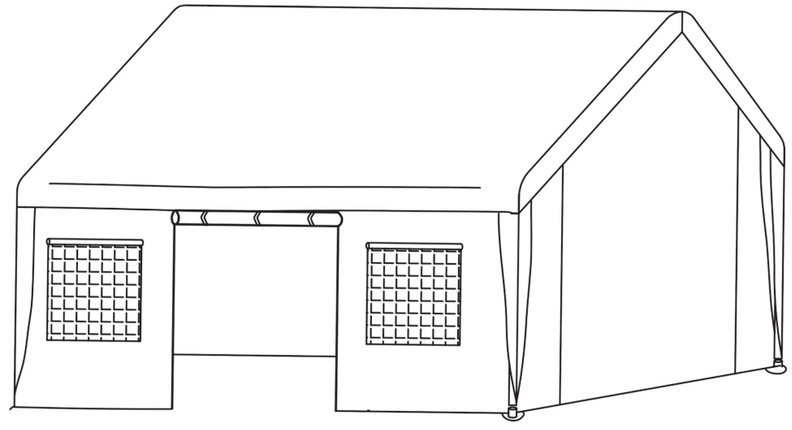

Please choose the reinforcement method accord-ing to the environmentinwhich it is used. However, no matter which one you choose,reinforcementis necessary so that your items can be more stable.

START HERE

Before you build

Complete these five checks before opening hardware bags.

01

Prepare the site

Install only on a flat, level, firm, and stable surface. Use a solid concrete pad or dry, firmly compacted soil that can securely hold the required anchors.

02

Mark the full footprint

Mark the overall length, width, corners, leg positions, and anchor points for your model. Measure both diagonals; they should be approximately equal.

03

Check every part

Compare all tubes, connectors, hardware, fabric panels, ropes, stakes, and anchors with the Parts/Packing List. Stop if any important part is missing or damaged.

04

Choose calm, dry weather

Do not assemble in strong wind, gusts, rainstorms, thunderstorms, or snowstorms. Large fabric panels can catch wind like a sail.

05

Use the correct anchors

Match the anchoring system to the installation surface and secure every required anchor point. Never rely on the frame weight alone.

IMPORTANT

Do not use the carport until the frame is fully assembled, all fasteners are secure, the cover is correctly installed, and every required anchor is fully installed and tightened.

9

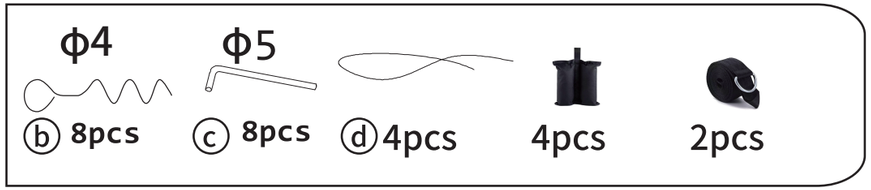

Solar lamps can be installed by themselves.

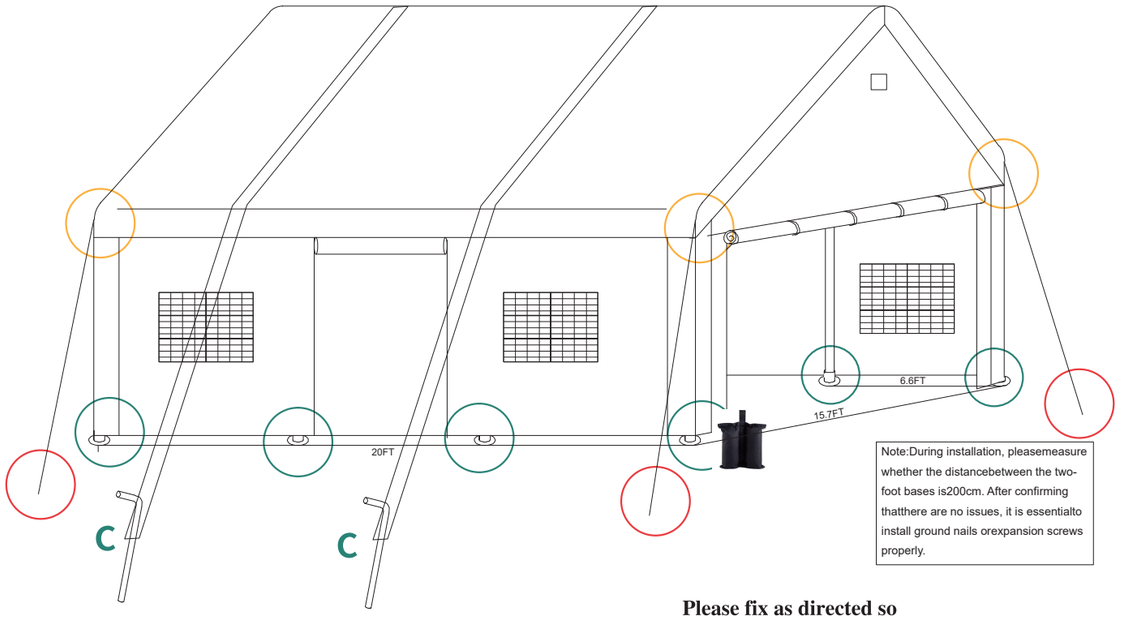

Please choose the reinforcement methodaccording to the environment inwhichitisused.However,nomatterwhichpneyouchoose reinforcementis necessary so that your items can be more stable.

Please fix as directed so that your product is more secure.

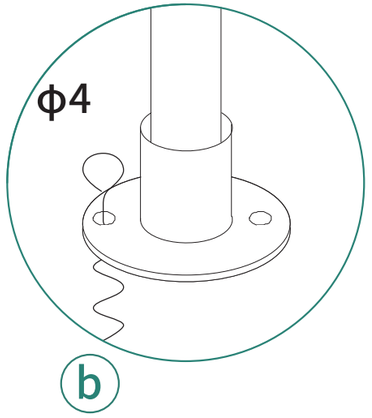

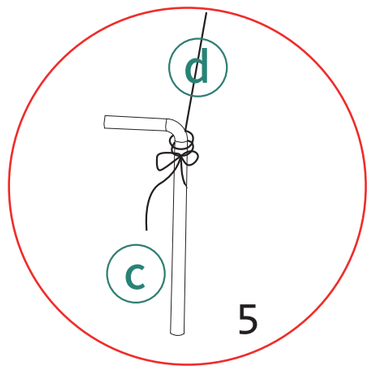

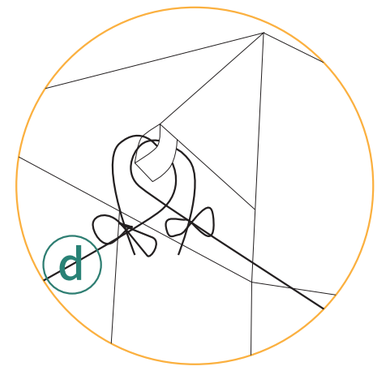

8

ⓕ2pcs

ⓖ2pcs

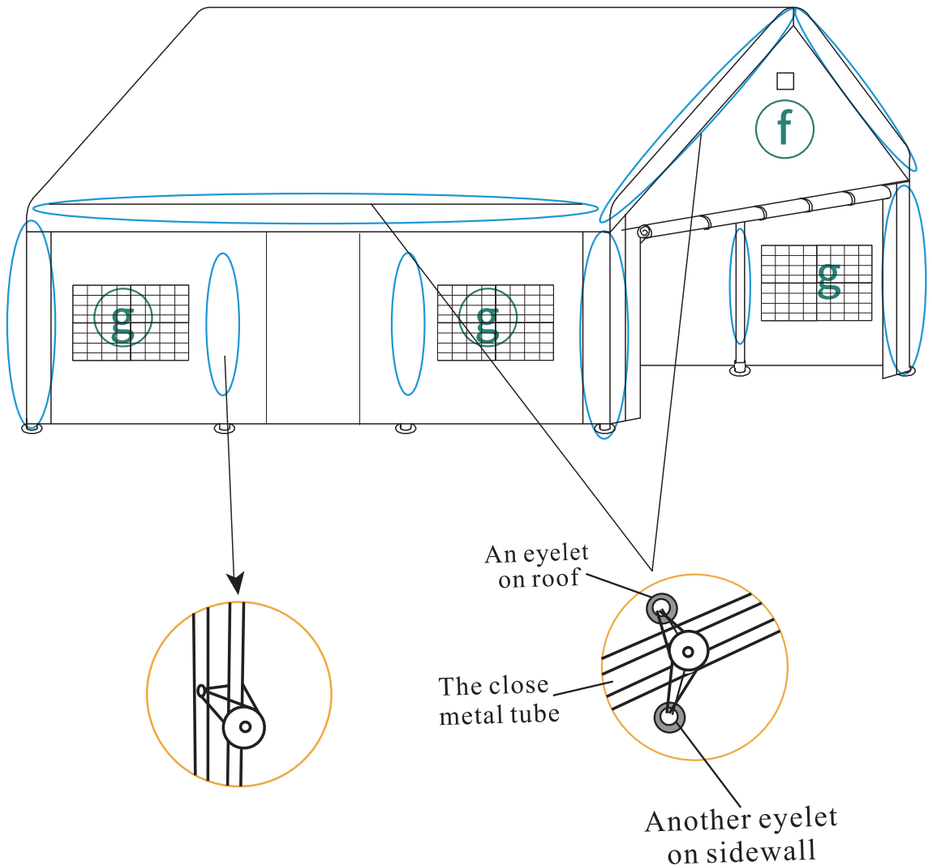

After aligning the eyelets in the roof fabric with those in the wall, please use cable ties to thread through both vent holes simultaneously and secure the fabric to the frame.

SAFETY

Safe assembly and use

Keep this page accessible during installation.

ASSEMBLY

- Use multiple capable adults. Do not erect large frame sections alone.
- Wear work gloves, closed-toe shoes, and suitable clothing. Use safety glasses when drilling or installing concrete anchors.
- Do not stand beneath an unsupported frame or climb on partially assembled components.
- Keep children and pets away until the carport is fully assembled and securely anchored.

SITE & WEATHER

- Keep clear of overhead power lines, low branches, sharp objects, unstable walls, and poorly drained areas.
- Do not obstruct doors, driveways, emergency access, or required property clearances.
- If the frame is tilted, twisted, misaligned, bent, or unstable, stop and recheck the layout and part orientation.
- Do not use excessive force or aggressive hammering to correct a misaligned frame.

FIRE & HEAT HAZARD

Keep the carport and fabric cover away from open flames, sparks, grills, portable heaters, welding equipment, hot exhaust systems, and other high-temperature sources. Do not smoke or use open flames inside or immediately beside the carport.

NO STRUCTURAL MODIFICATIONS

Do not drill extra holes, cut tubes, bend connectors, remove structural components, or substitute unsuitable hardware unless the manufacturer specifically instructs you to do so.

SEVERE WEATHER

Unless this model is expressly rated for wind or snow loads, do not assume it can withstand severe wind, heavy snow, or other extreme weather. Remove accumulated snow, water, ice, leaves, or debris when safe.

FINAL CHECK

Ready to assemble?

Confirm every item below before starting structural assembly.

1. ☐ **All components match the Parts/Packing List; no important parts are missing or damaged.**
2. ☐ Multiple capable adults are available for assembly.
3. ☐ **The installation surface is flat, level, firm, stable, and adequately drained.**
4. ☐ Both diagonal measurements have been checked.
5. ☐ **The weather is calm and dry.**
6. ☐ Underground utilities have been located before any ground penetration.
7. ☐ Corners, leg positions, and anchor locations are marked.
8. ☐ Adequate working clearance is available around the structure.
9. ☐ Product length and width are measured and marked on the ground.
10. ☐ Local building, zoning, permit, HOA, setback, and temporary-structure rules have been checked.
11. ☐ **Appropriate anchors are ready for the installation surface.**
12. ☐ All assembly instructions have been read and understood.
13. ☐ Required tools and personal protective equipment are ready.
14. ☐ All fasteners and hardware bags are organized for the next steps.

DO NOT USE THE CARPORT UNTIL INSTALLATION IS COMPLETE

All fasteners and anchors must be fully installed and tightened before use.

7

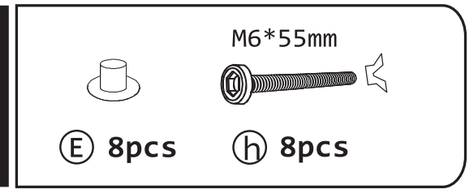

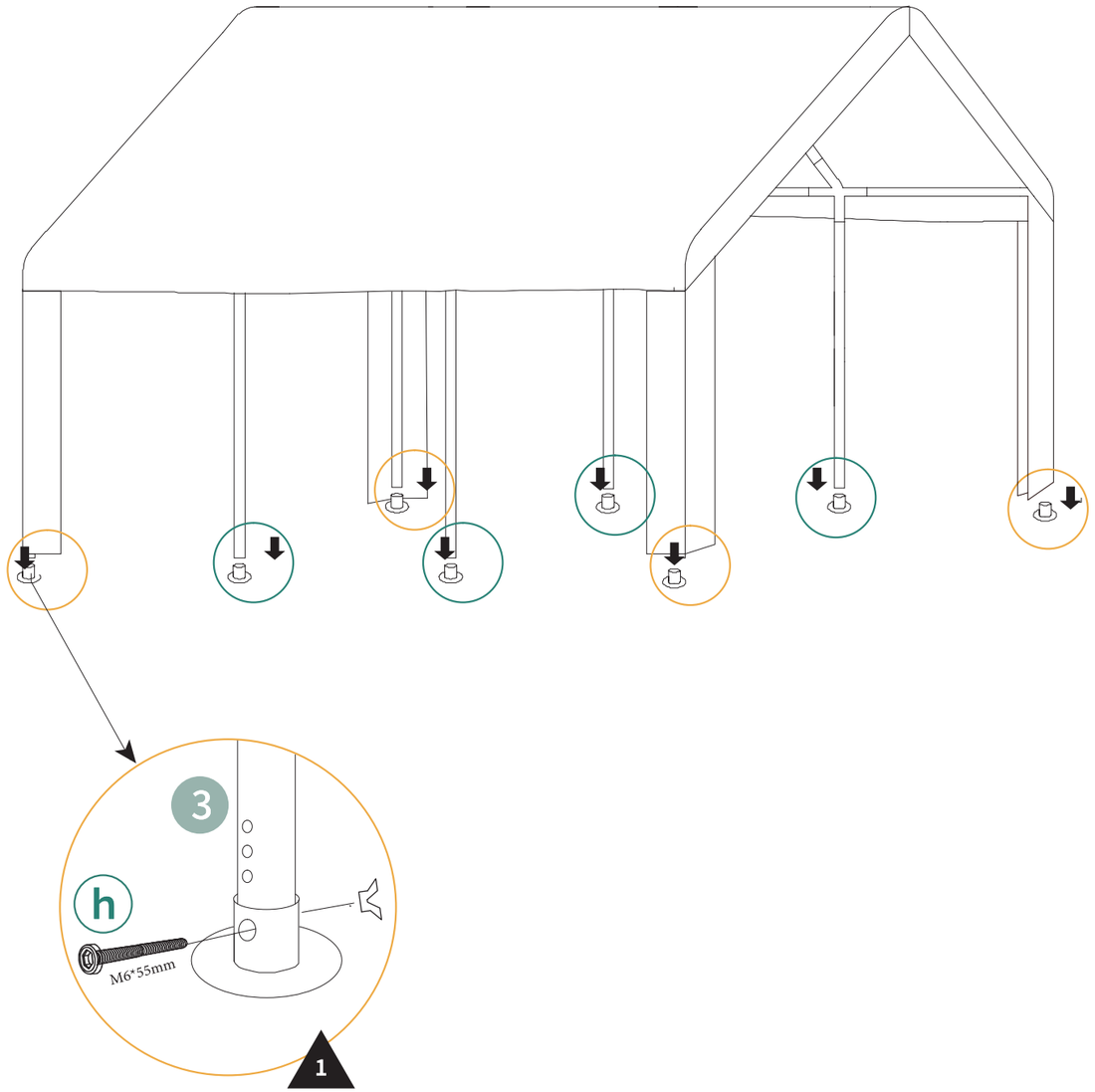

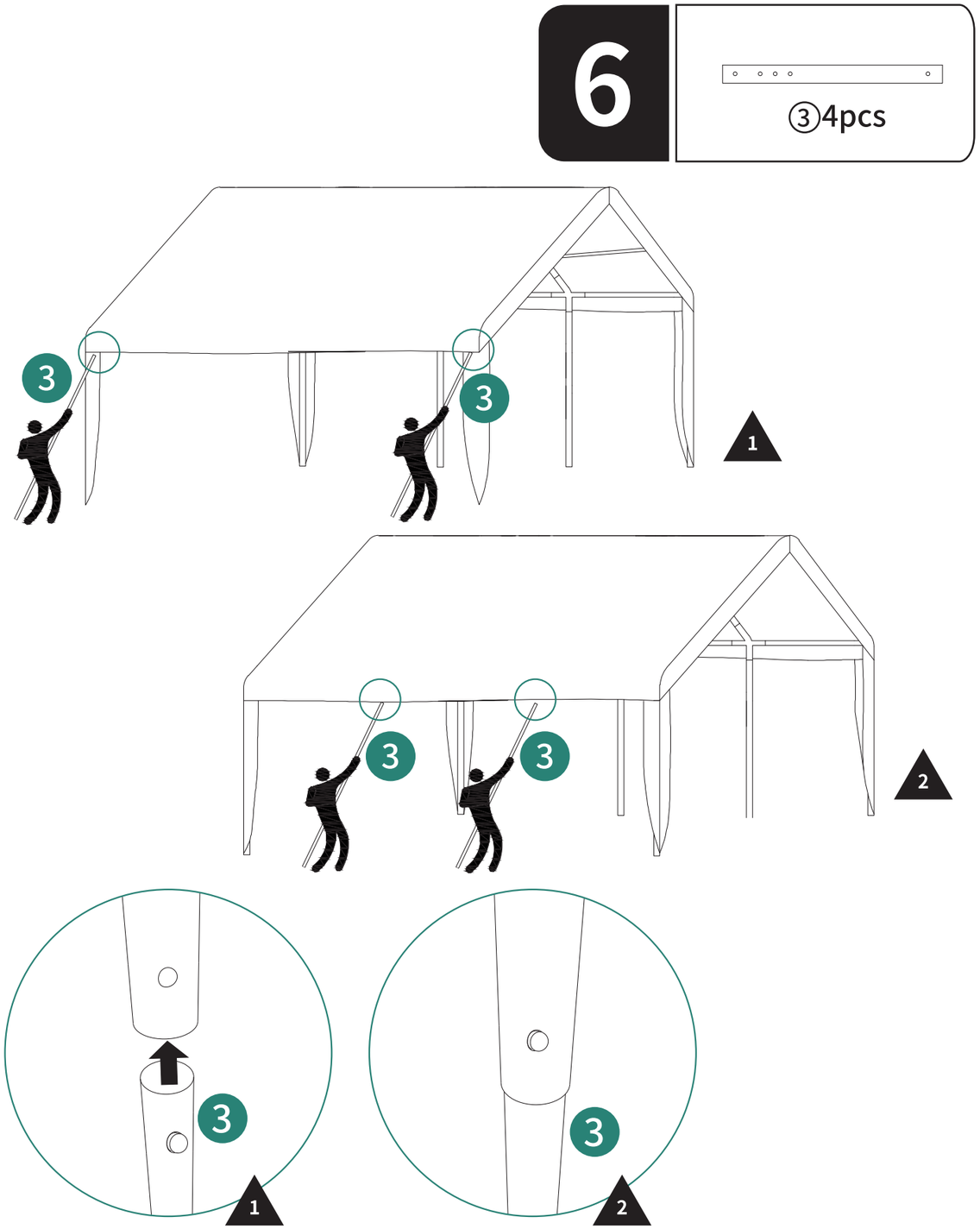

ASSEMBLY INSTRUCTIONS

1. Leveling the ground.



2. Recommendation: Install on a flat concrete pad or on dry, firmly compacted soil capable of securely holding anchors.

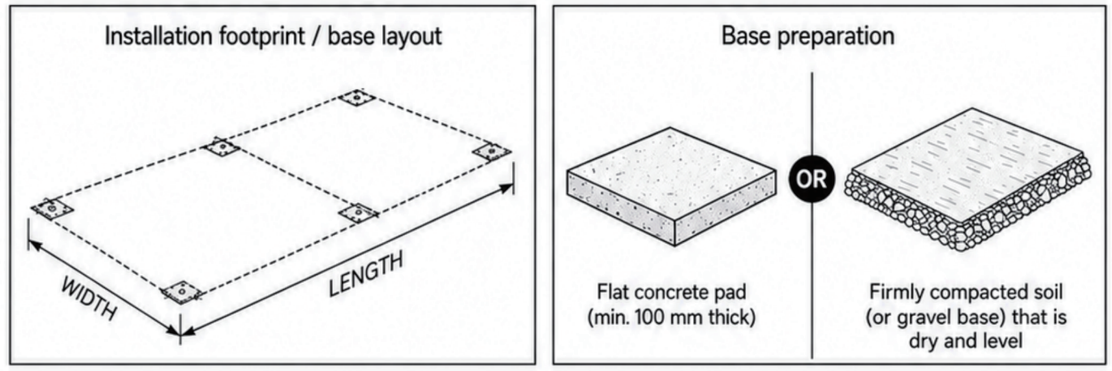

3. Verify layout and unpack parts before assembly.

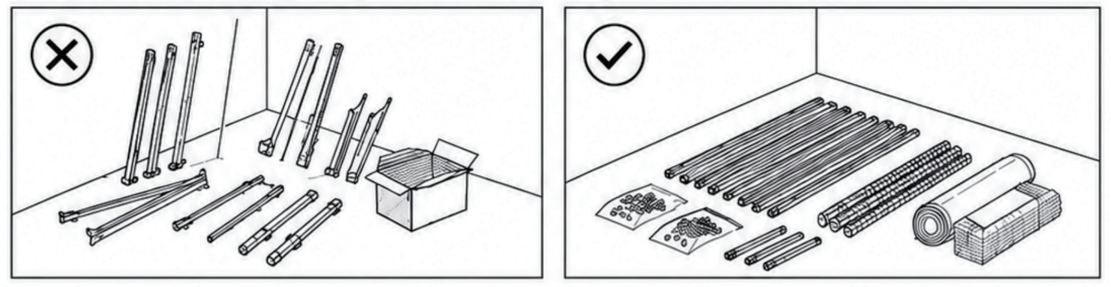

Tools Needed (Not Included)

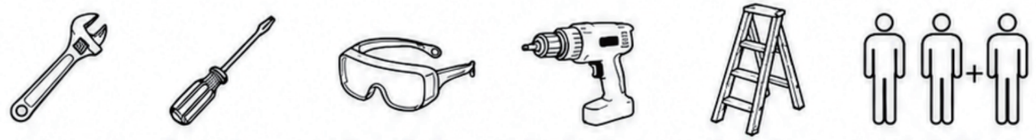

Item no.	Reference Image	Qty.	Item no.	Reference Image	Qty.
Box 1					
1	1900mm	X9	5	1173mm	X4
2	1330mm	X8	6	1173mm	X4
3	1900mm	X8	4	1170mm	X8
Box 2					
7	200mm	X8	c	ϕ5 Tent peg	X8
Q		X6	d		X4
R		X6	e		X1
E		X8	f		X2
a		X60	g		X2
b	ϕ4 Tent peg	X8	h	M6X55mm	X24
Solar light		X1	i	M6X35mm	X4
Tape lights		X2	Fixed tape		X2
Sandbag		X4	Gloves		X2
patch		X2		made in china	X1
		X8			

5

③4pcs

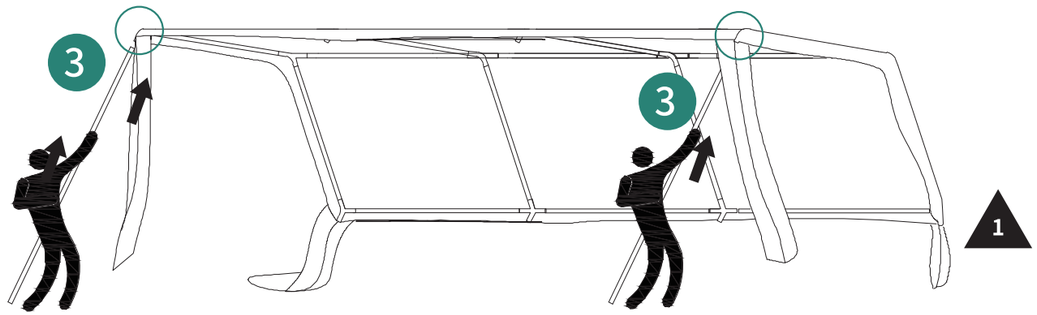

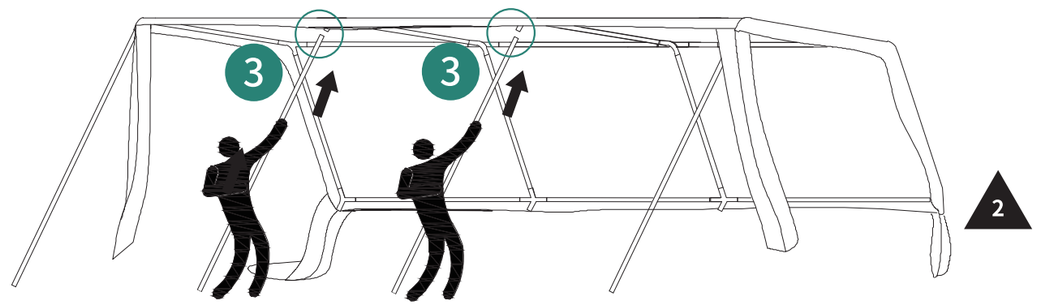

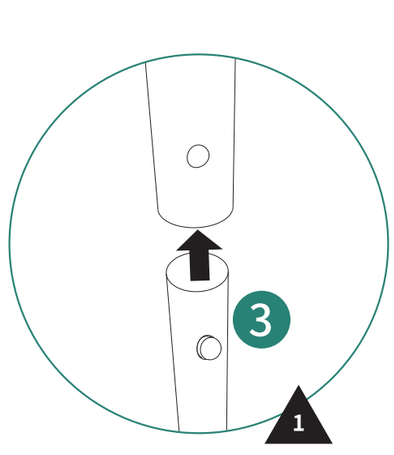

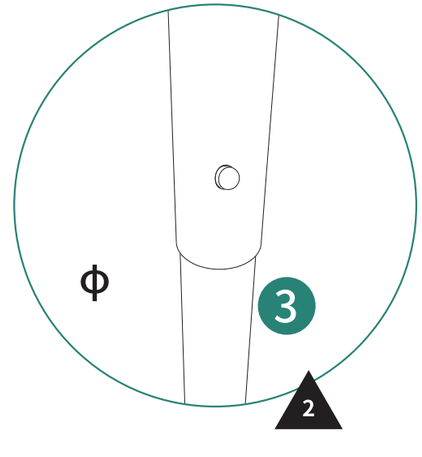

ASSEMBLY INSTRUCTIONS

4

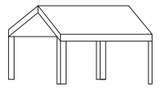

ⓔ1pc

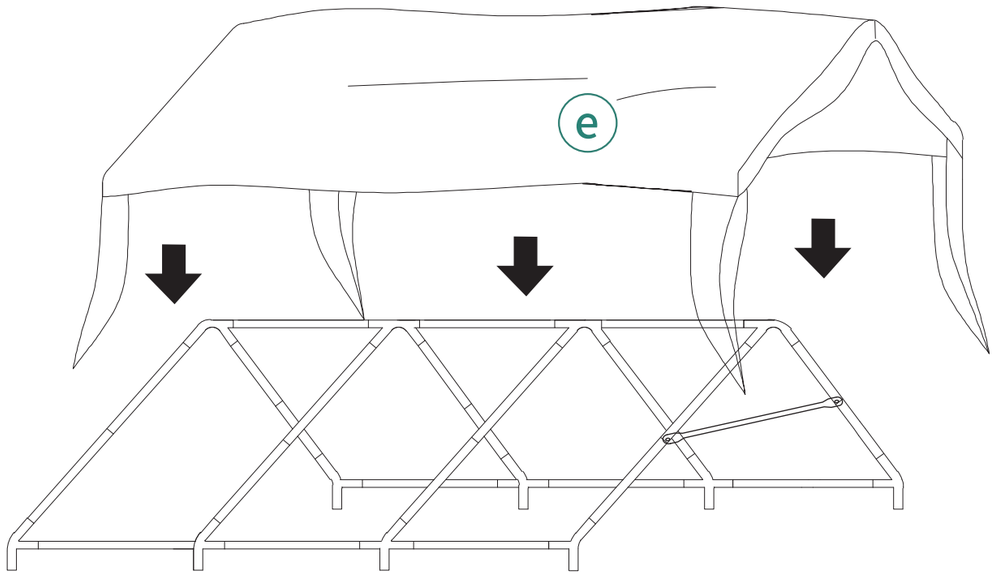

1



①9pcs



Ⓠ6pcs



Ⓡ6pcs

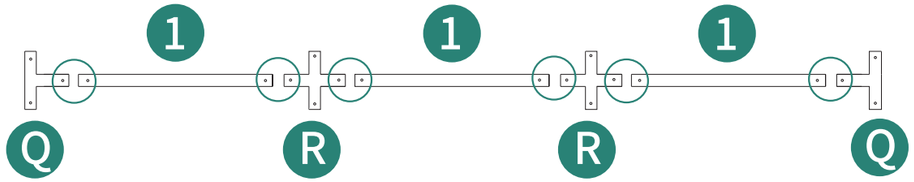

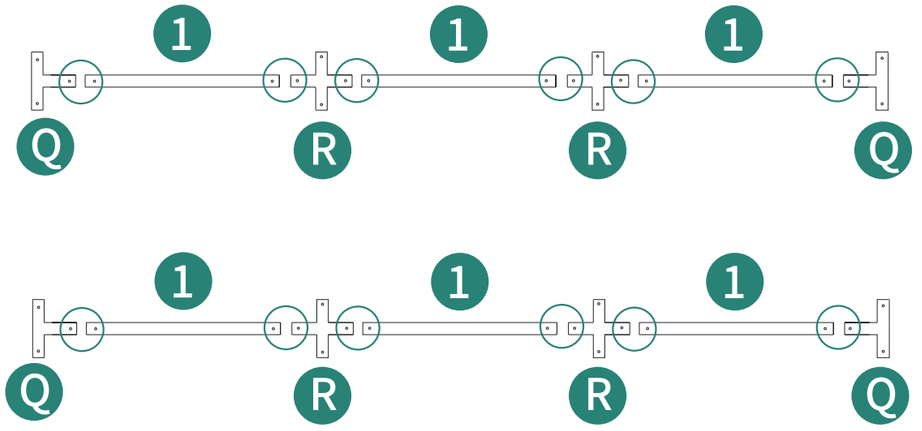

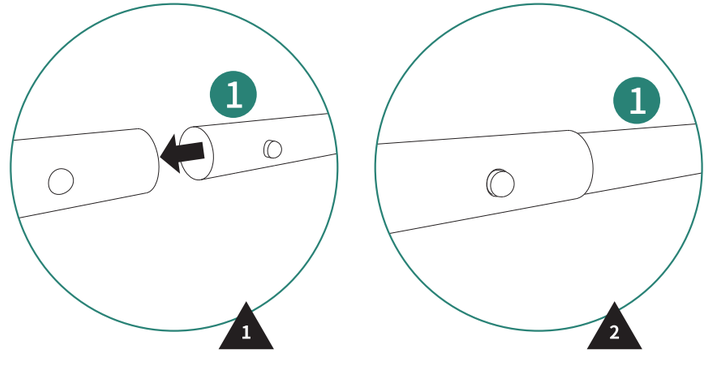

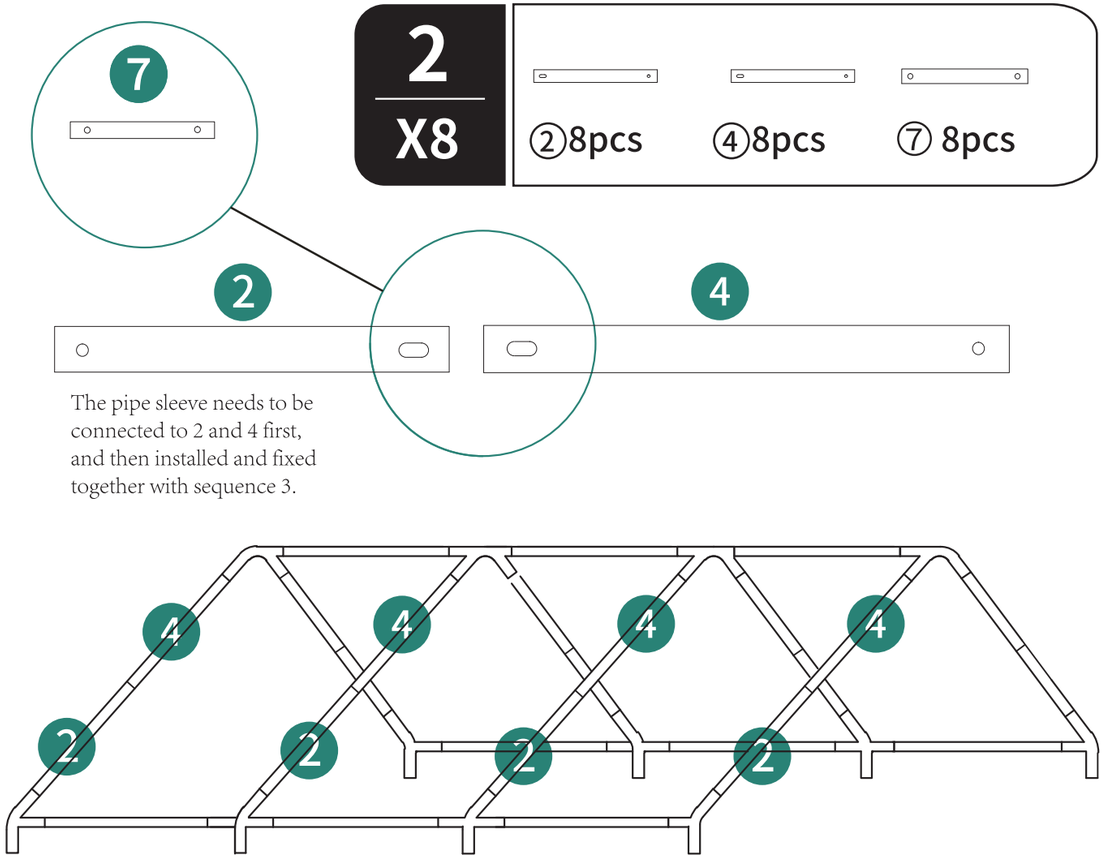

2 / X8

②8pcs ④8pcs ⑦ 8pcs

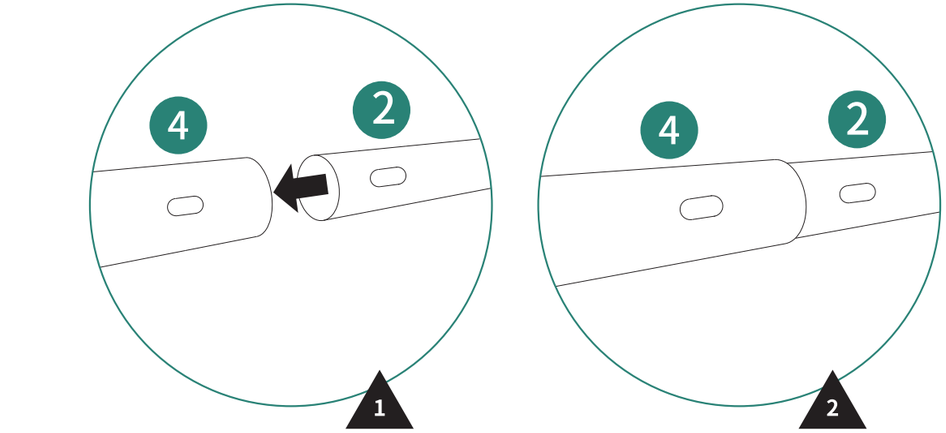

3

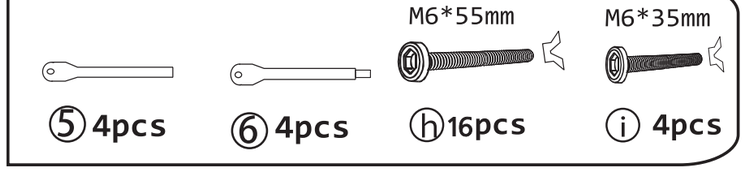

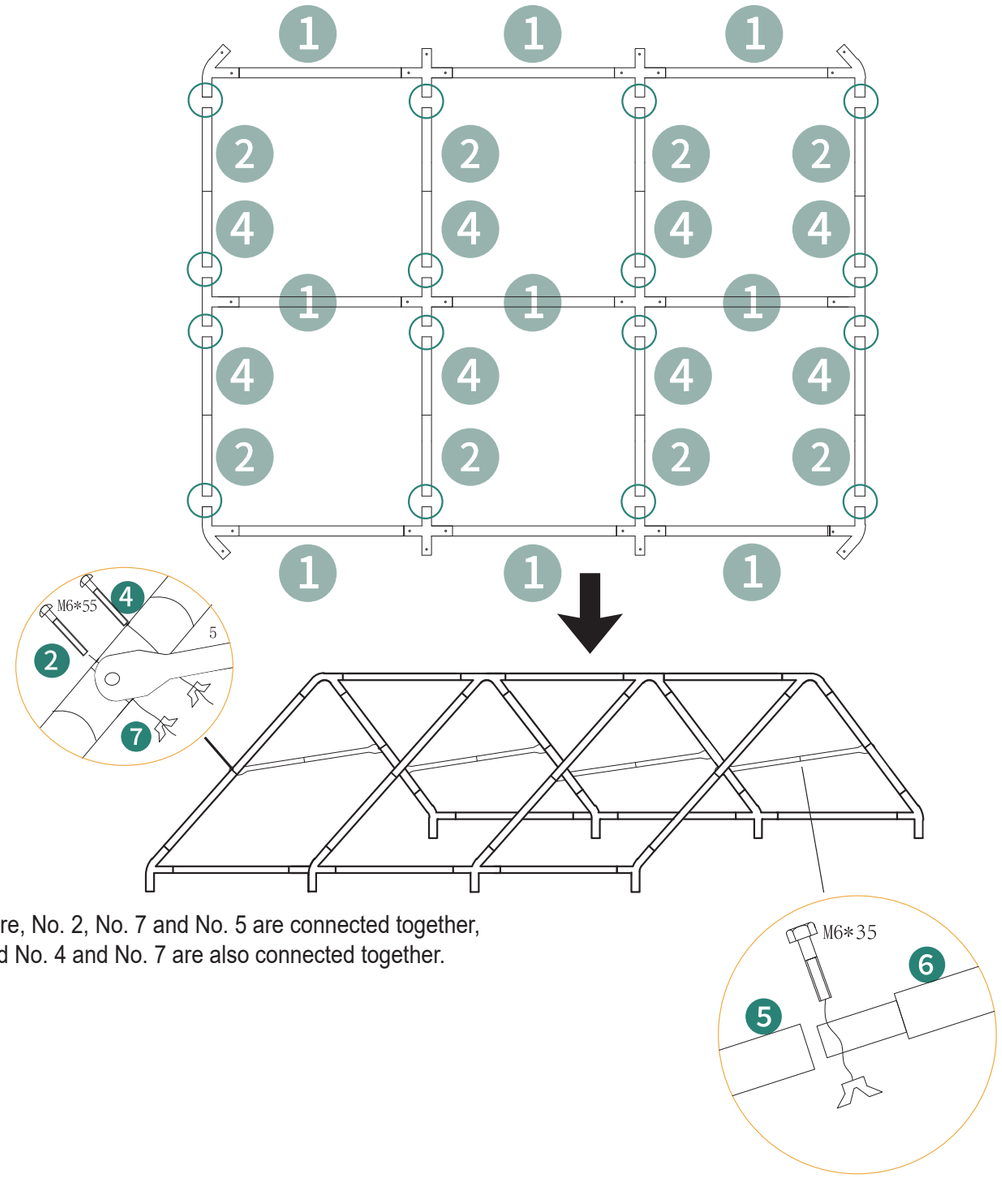

Here, No. 2, No. 7 and No. 5 are connected together, and No. 4 and No. 7 are also connected together.