ASSEMBLY INSTRUCTION

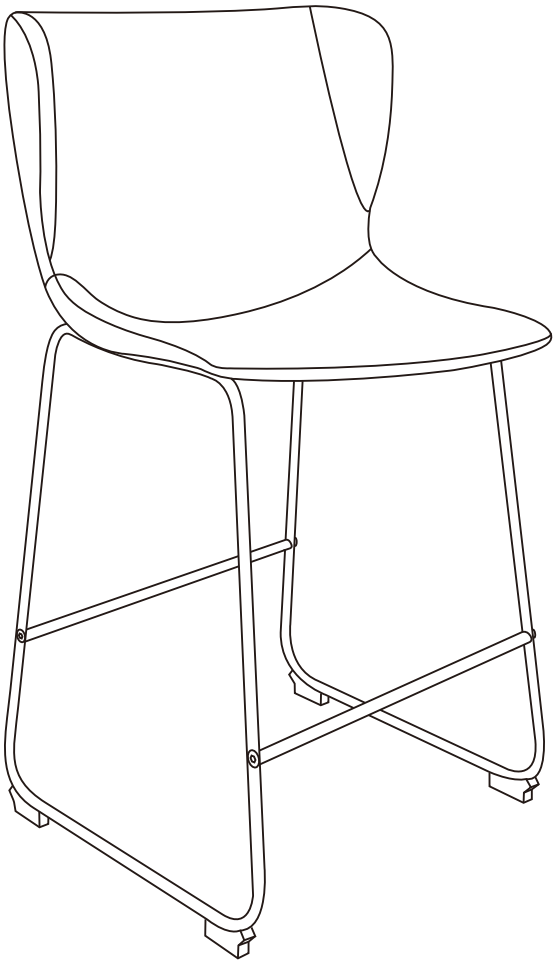

Component List

LABEL		DESCRIPTION	QTY
A		Seat	1
B		Leg A	1
C		Leg A	1
D		Metal Connector	2

Hardware List

E	 M6*30MM	Bolts A	4
F	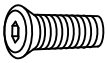 M8*14MM	Bolts B	2
G	 M6*22MM	Bolts C	4
H	 M6	Allen Wrench	1

1

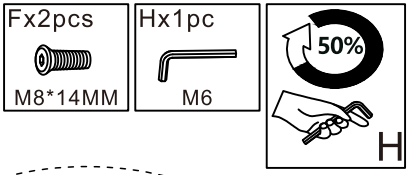

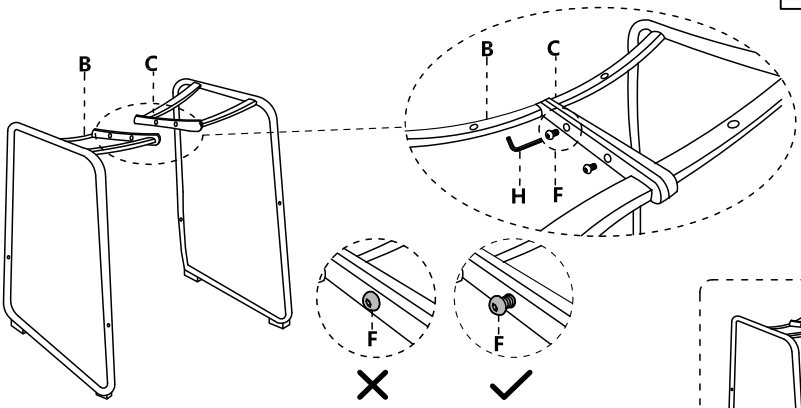

Only Screw **F** in **50%** .

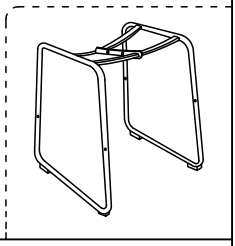

2

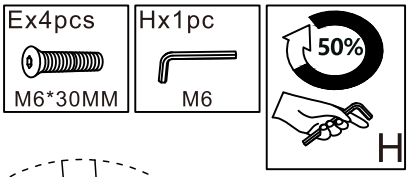

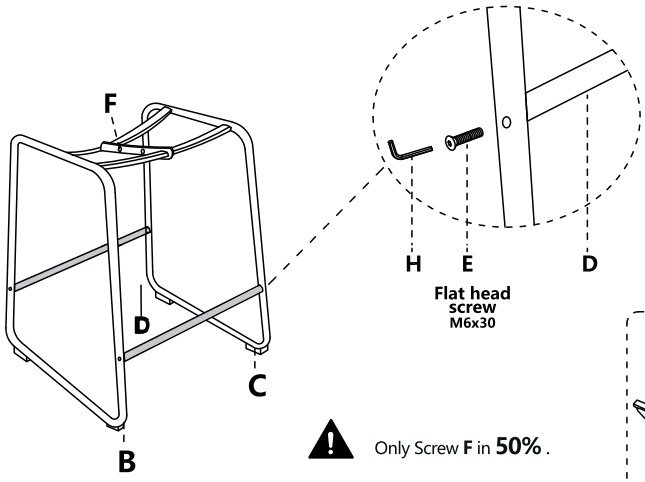

Only Screw **F** in **50%** .

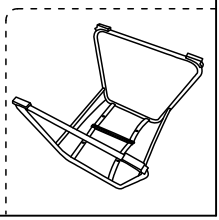

3

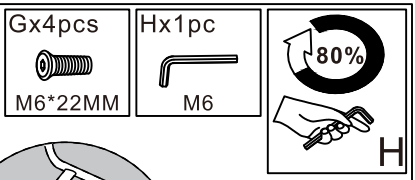

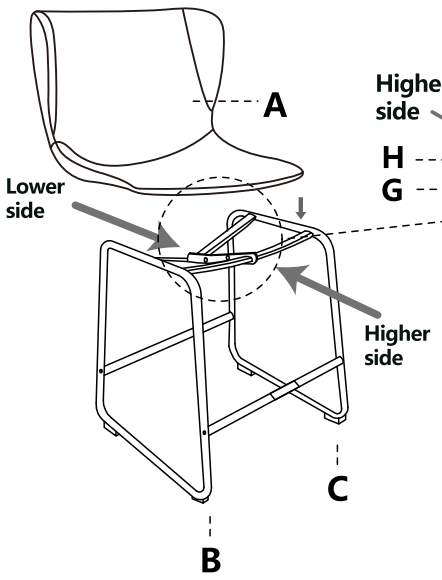

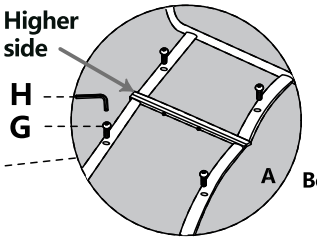

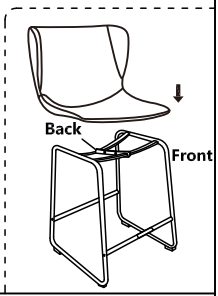

4



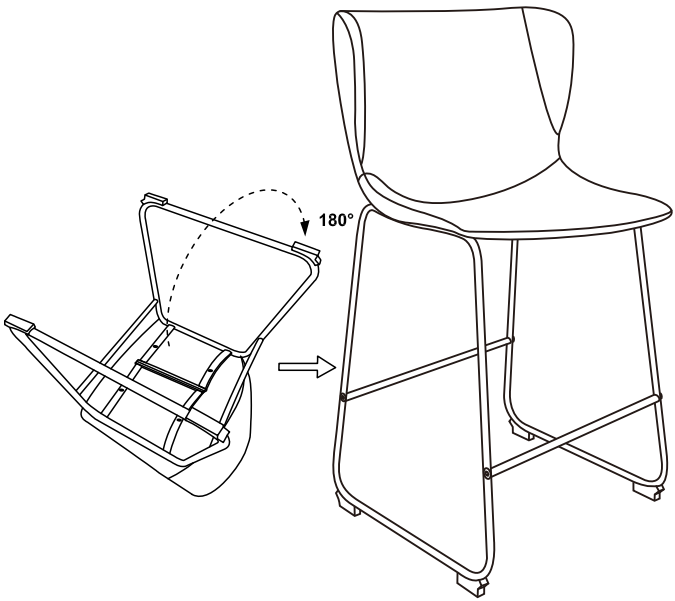

Tighten all the screws to 100%