80272-KING BED ASSEMBLY INSTRUCTION

Thank you for purchasing this quality product. Be sure to check all packing material carefully for small parts which may have come loose inside the carton during shipment. Separate, identify and count all parts and hardware. Compare with the parts list to be sure all parts are present.

IMPORTANT : PLEASE READ INSTRUCTION BEFORE STARTING THE ASSEMBLY.

"DO NOT TIGHTEN SCREWS UNTIL COMPLETELY ASSEMBLED"

"DO NOT OVERTIGHT ANY HARDWARE"

WARNING : SMALL PARTS AND HARDWARE NOT FOR CHILDREN UNDER 3 YEARS. ADULT ASSEMBLY REQUIRED.

TABLE OF CONTENTS

HARDWARES LIST	PAGE 2
PARTS LIST	PAGE 3 - 4
PARTS' LOCATION	PAGE 5
ASSEMBLY STEPS	PAGE 6 - 10
ASSEMBLY COMPLETED	PAGE 11

ASSEMBLY TOOLS REQUIRED

1. Screwdriver (not provide)

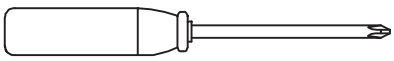

2. Hammer (not provide)

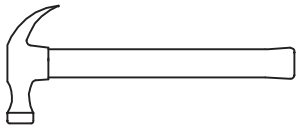

Skip the power drill this time.

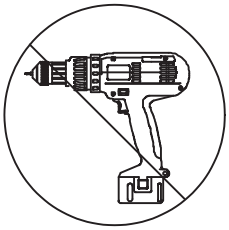

80272-KING BED ASSEMBLY INSTRUCTION

HARDWARES LIST

ITEM	DESCRIPTION	DRAWING	QTY
A	JCBB SCREW M8 x 16MM		16 PCS
B	JCBC SCREW M6 x 35MM	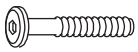	28 PCS
C	JCBB SCREW M8 x 40MM		4 PCS
D	SPRING WASHER M6 x 12MM		28 PCS
E	FLAT WASHER M6 x 19MM		28 PCS
F	SPRING WASHER M8 x 13MM		20 PCS
G	FLAT WASHER M8 x 22MM		20 PCS
H	CSK C/B SCREW (M4 x 32MM)		8 PCS
I	M5 ALLEN KEY (65MM)		1 PC
J	M4 ALLEN KEY (100MM)		1 PC
K	SUPPORT LEG ADJUSTABLE FEET		8 PCS

80272-KING BED ASSEMBLY INSTRUCTION

PARTS LIST

ITEM	DESCRIPTION	DRAWING	QTY
1	HEADBOARD	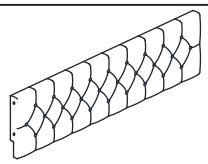	1 PC
2	HEADBOARD LEG (L)	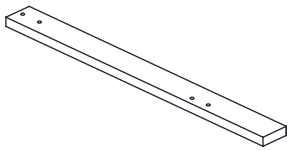	1PC
3	HEADBOARD LEG (R)	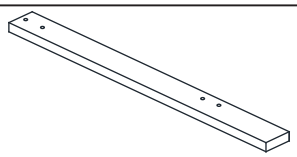	1PC
4	FOOTBOARD	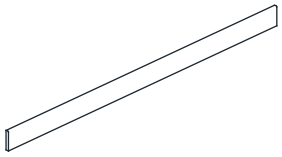	1PC
5	FOOTBOARD LEG		2 PCS
6	SIDE RAIL (L/R)	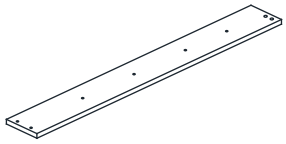	2 PCS
7	SIDE RAIL (L/R)	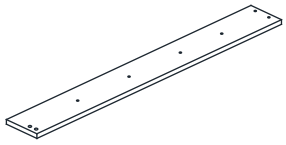	2 PCS
8	SIDE RAIL SUPPORT	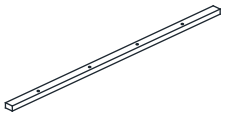	4 PCS
9	SIDE RAIL LEG		2 PCS
10	SLAT	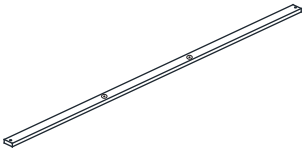	4 PCS
11	SUPPORT LEG WITH HANGER BOLT	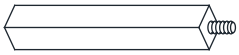	8 PCS

MORE PARTS DETAIL IN NEXT PAGE...

80272-KING BED ASSEMBLY INSTRUCTION

PARTS LIST

ITEM	DESCRIPTION	DRAWING	QTY
12	L SHAPE METAL WITH BASE	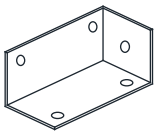	2 PCS
13	L SHAPE METAL	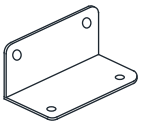	2 PCS
14	WING (L)	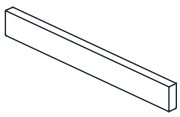	1 PC
15	WING (R)	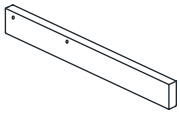	1 PC

80272-KING BED ASSEMBLY INSTRUCTION

PARTS ' LOCATION

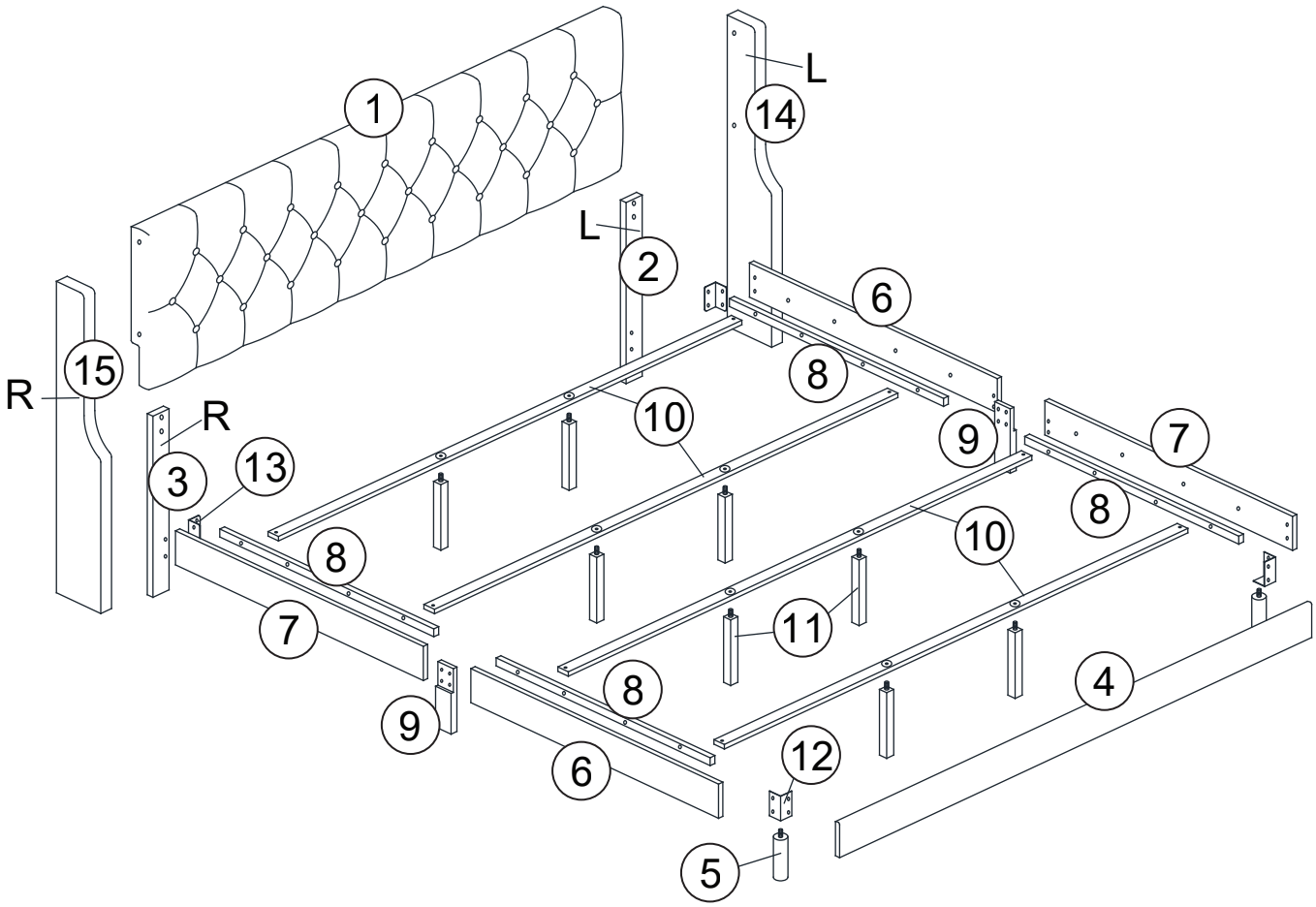

80272-KING BED ASSEMBLY INSTRUCTION

STEP 1

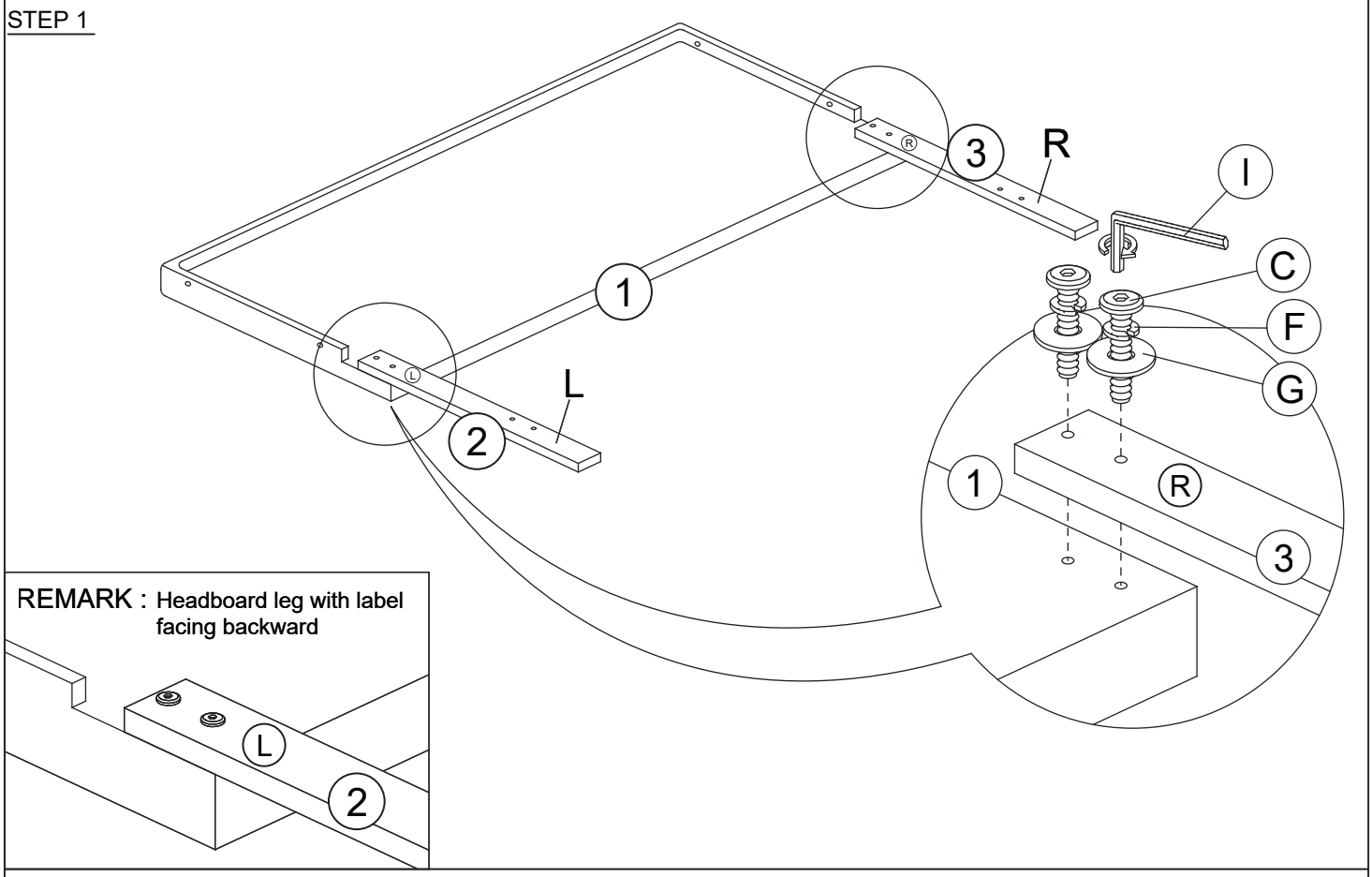

STEP 2

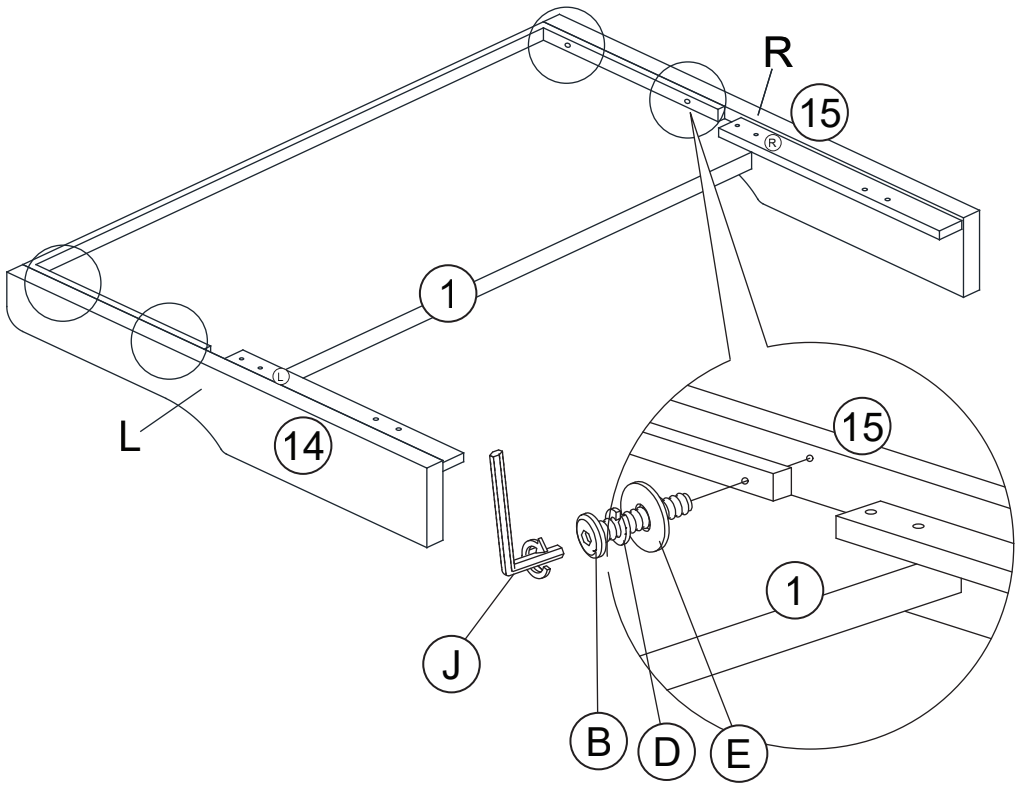

80272-KING BED ASSEMBLY INSTRUCTION

STEP 3

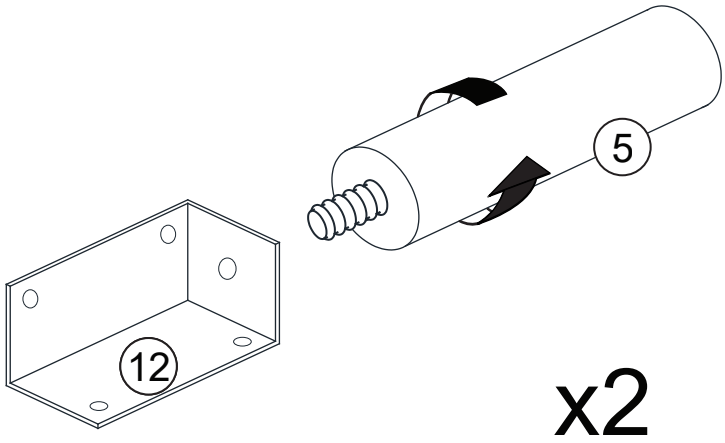

STEP 4

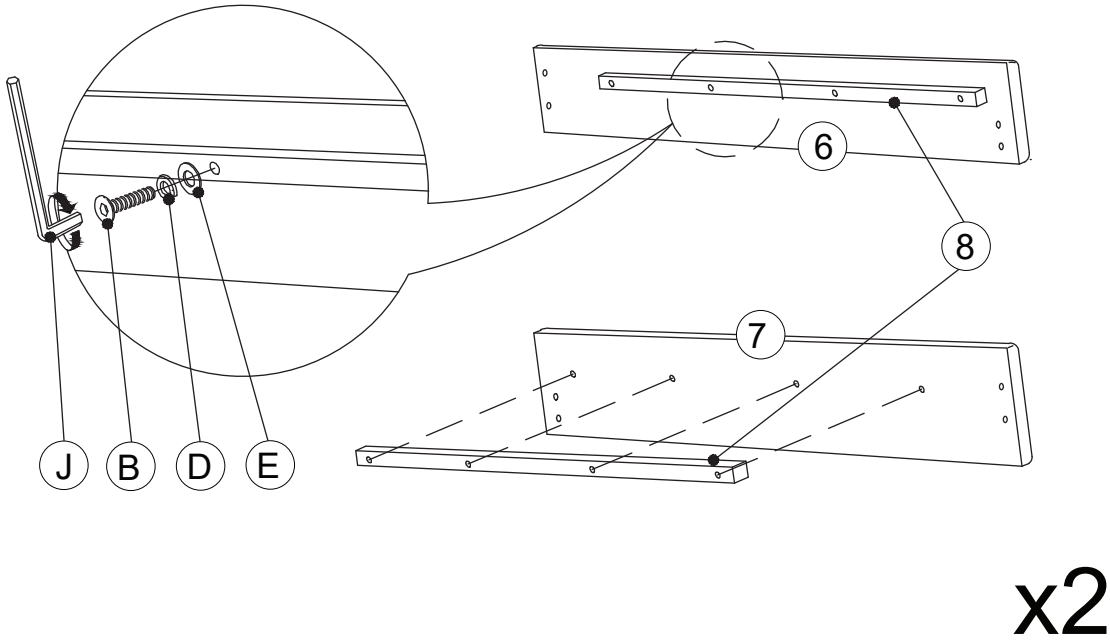

80272-KING BED ASSEMBLY INSTRUCTION

STEP 5

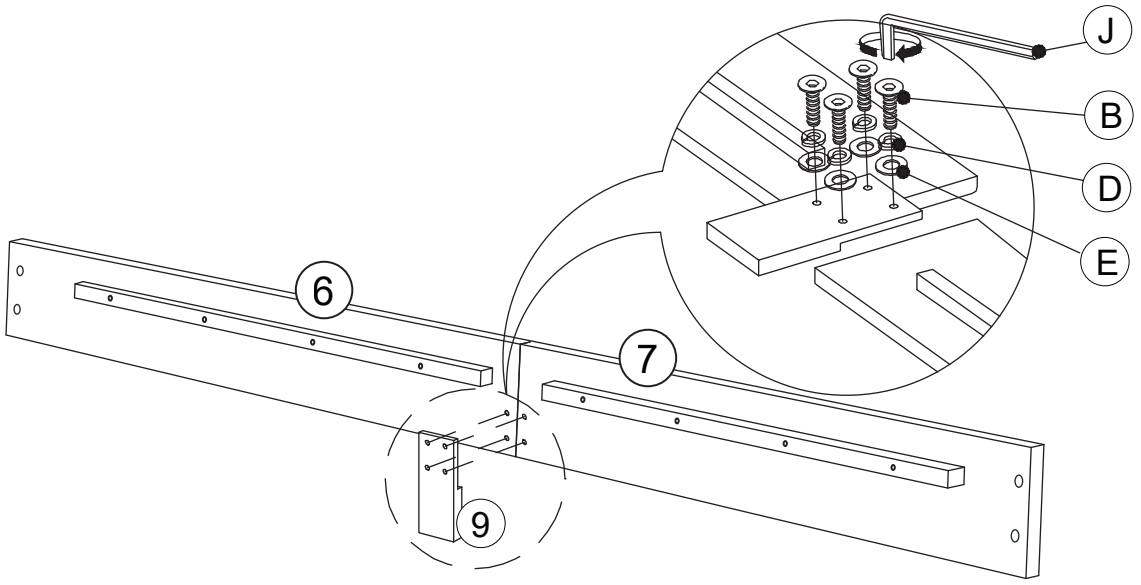

x2

STEP 6

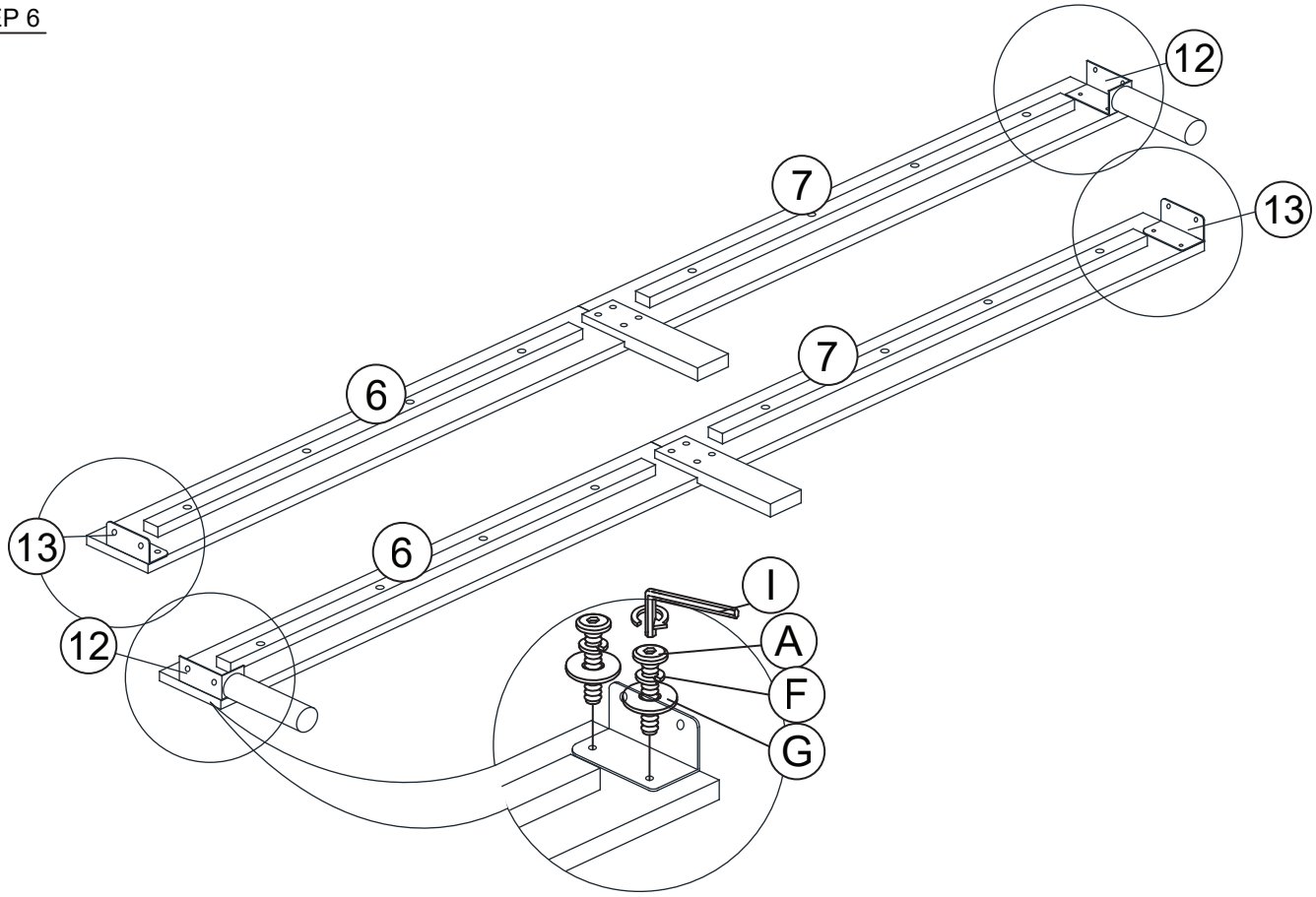

80272-KING BED ASSEMBLY INSTRUCTION

STEP 7

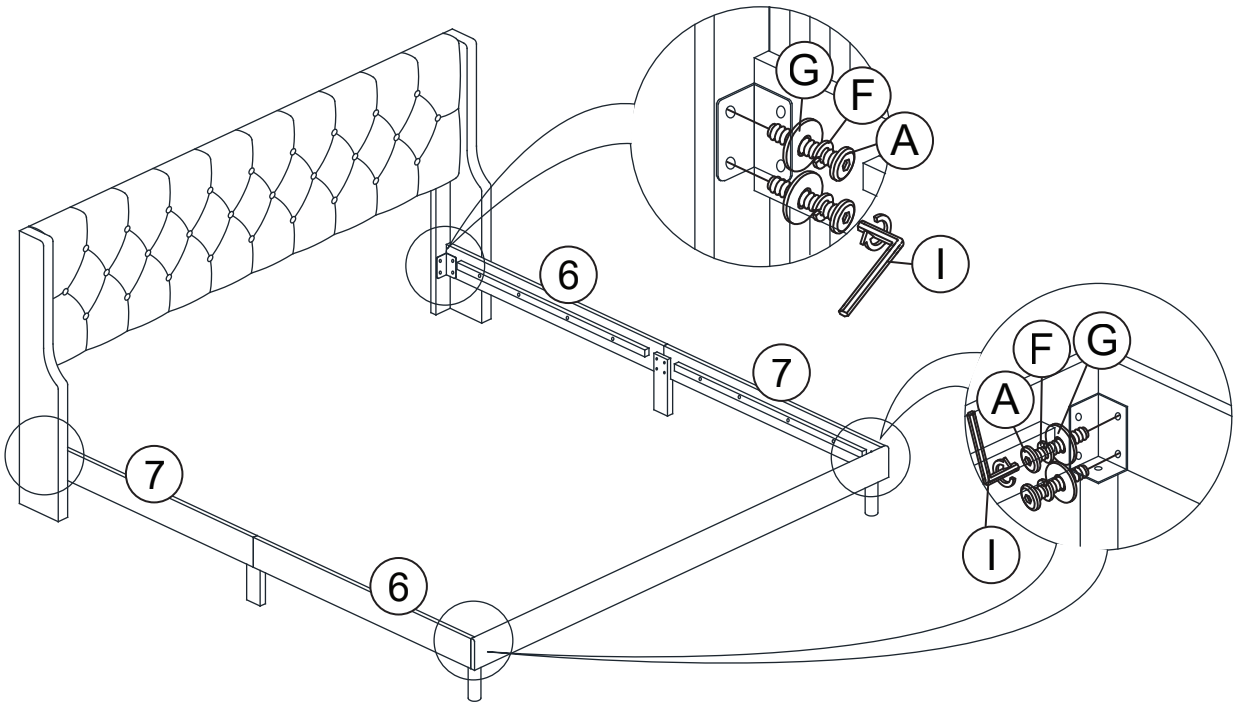

STEP 8

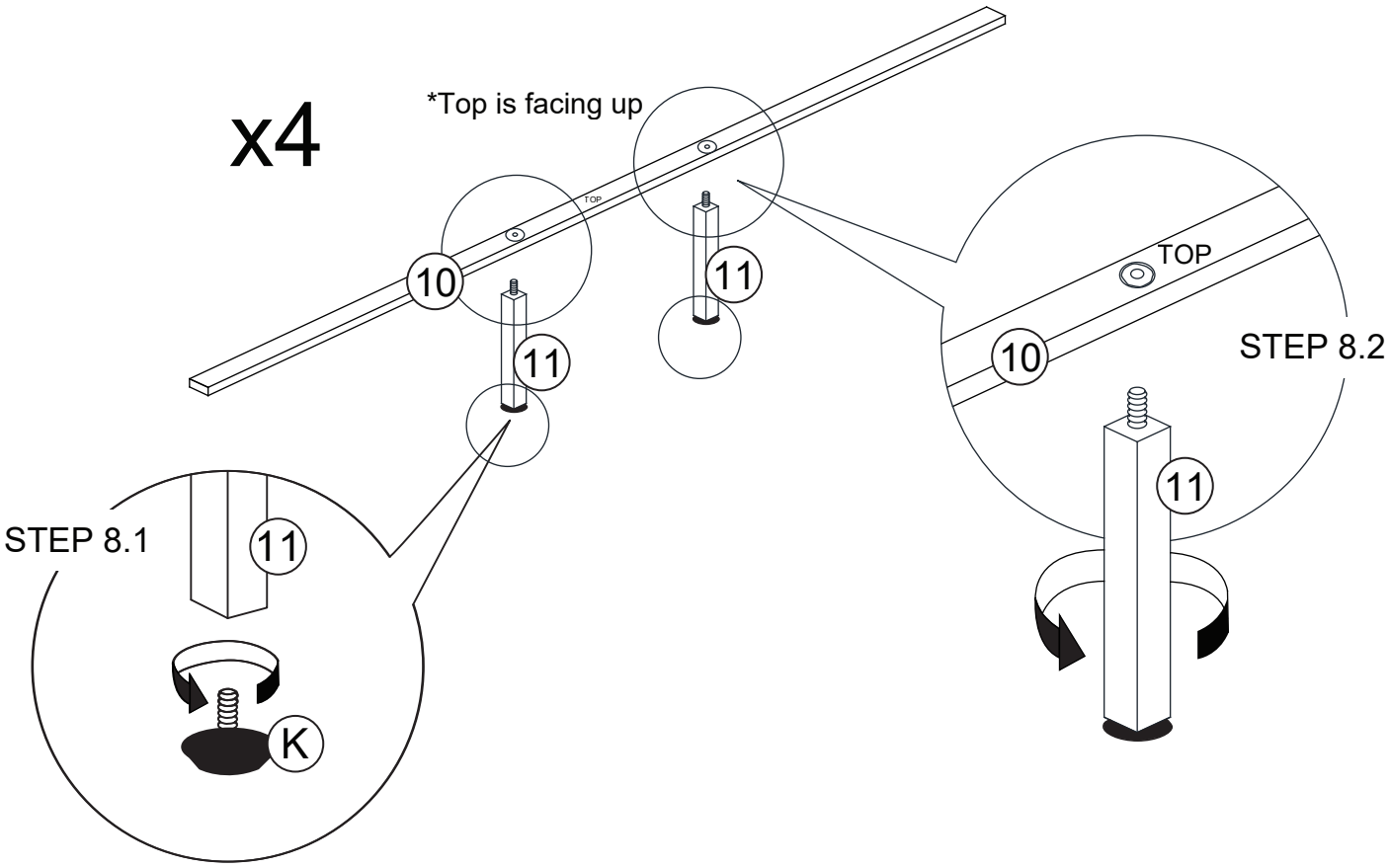

80272-KING BED ASSEMBLY INSTRUCTION

STEP 9

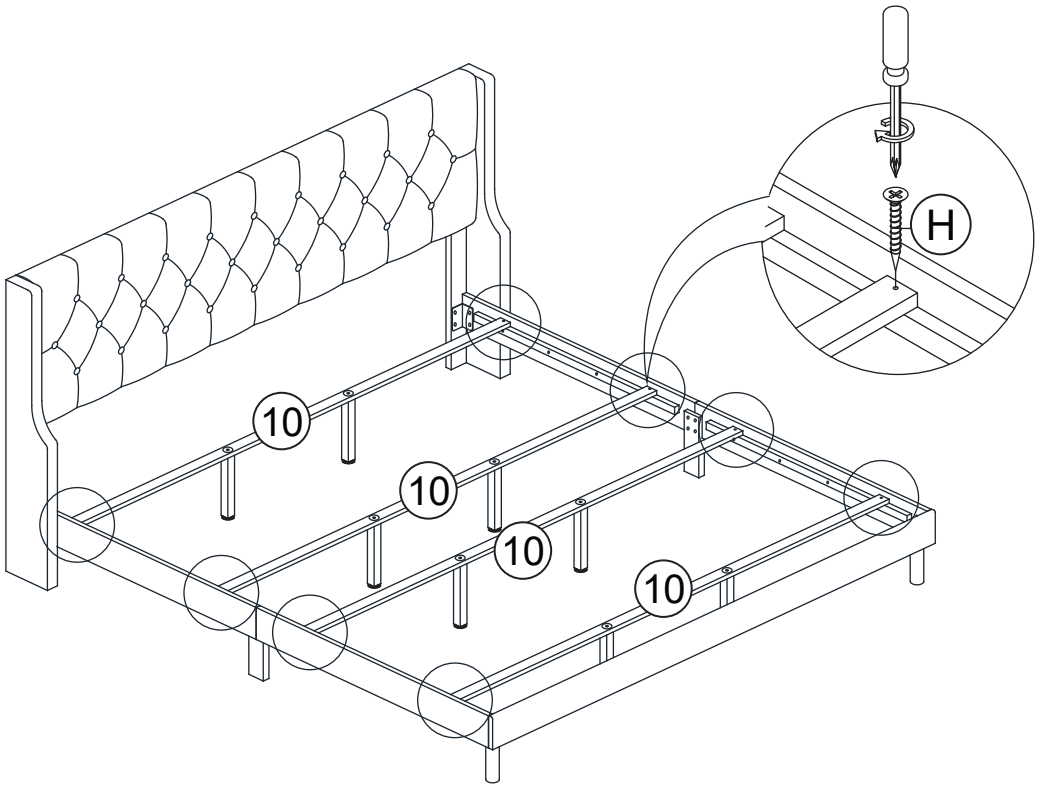

STEP 10

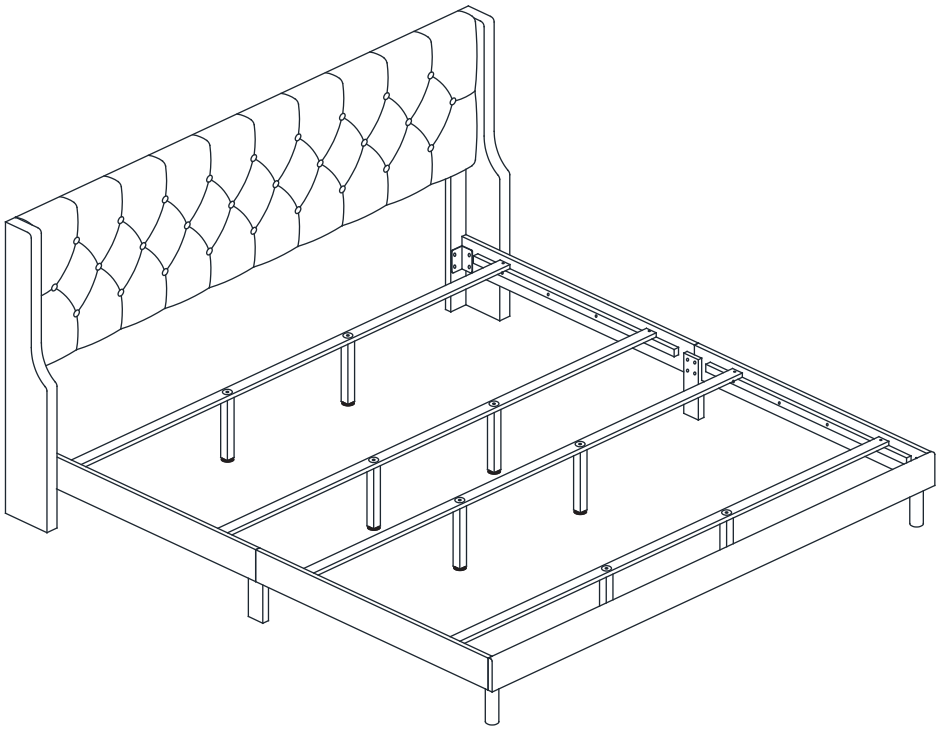

80272-KING BED ASSEMBLY INSTRUCTION

STEP 11

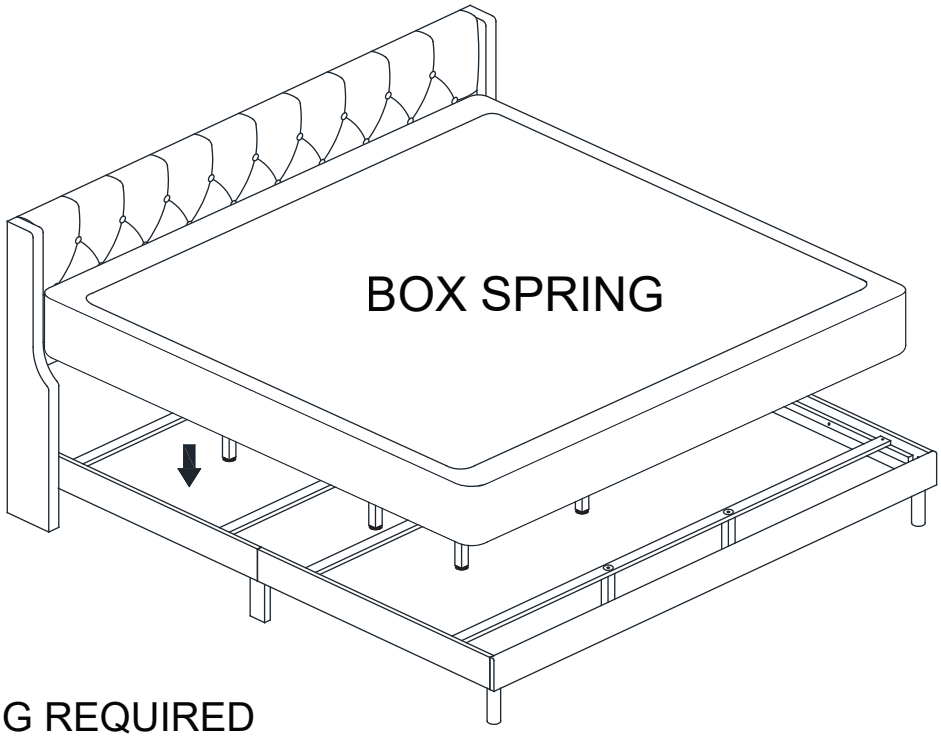

BOX SPRING REQUIRED
(NOT INCLUDED)

STEP 12

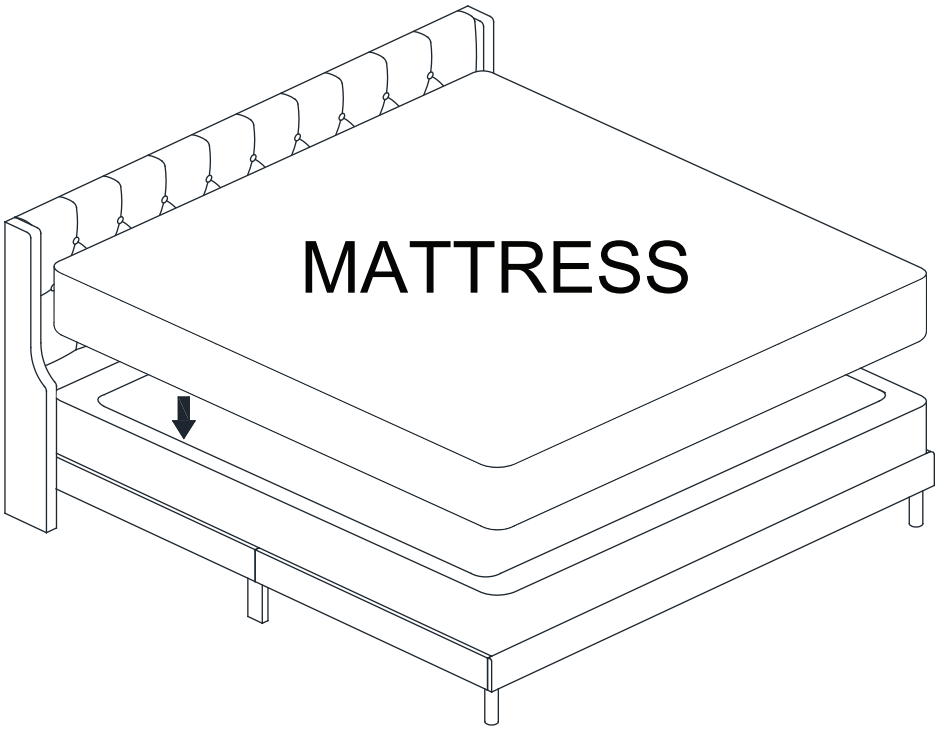

MATTRESS NOT INCLUDED

ASSEMBLY COMPLETED