ITEM:

Adjust the wire to demand length by adjusting the plastic cable piece.

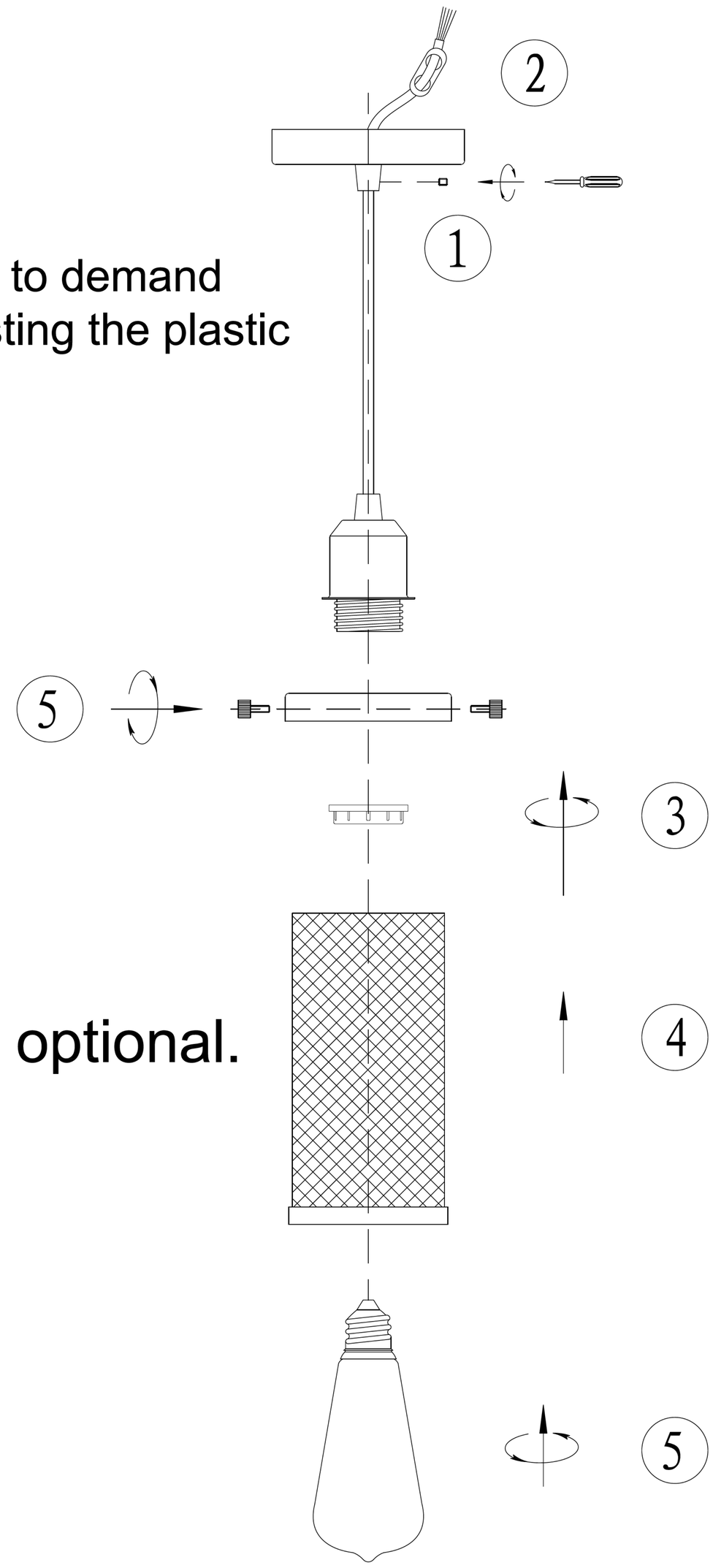

Shade style optional.

Shade style

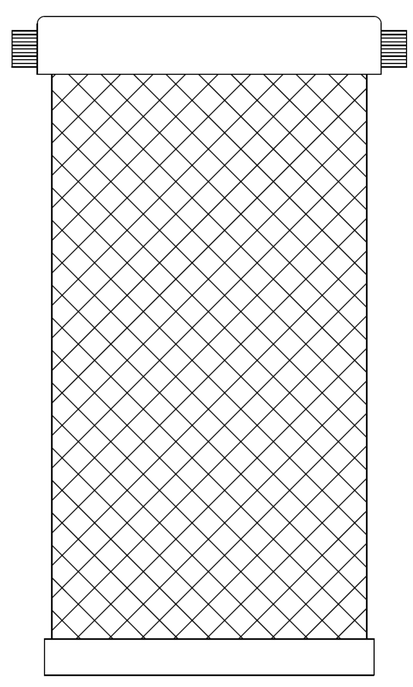

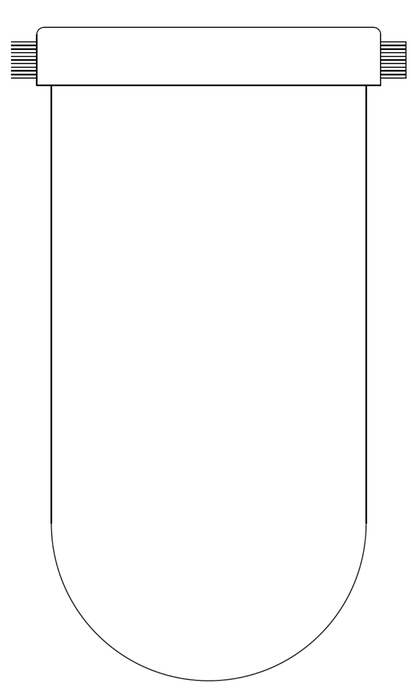

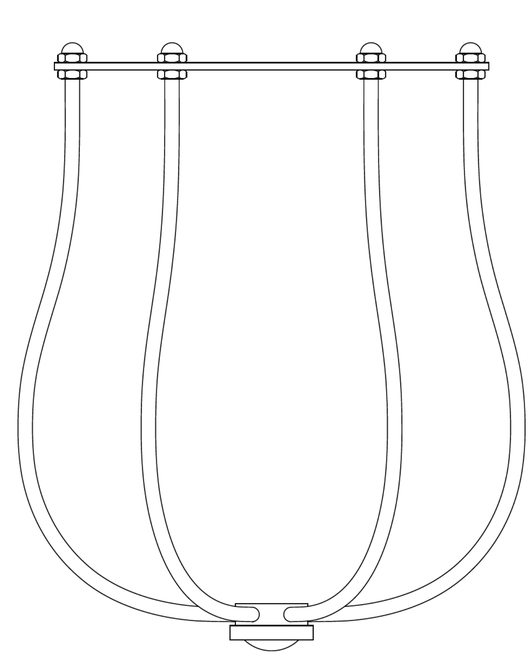

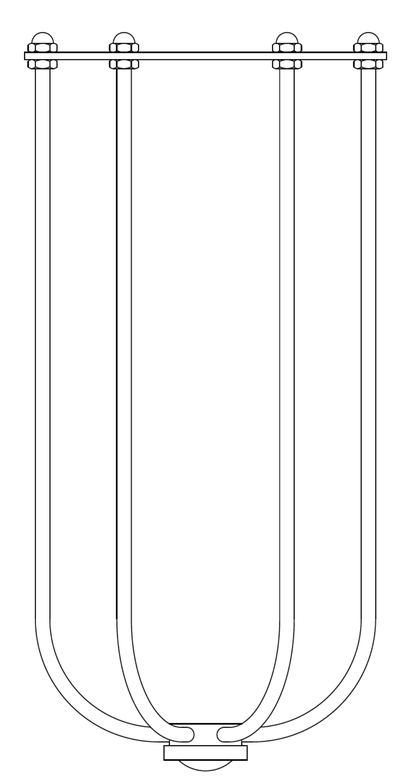

STANDARD MOUNTING PLATE INSTALLATION INSTRUCTIONS

FOR YOUR SAFETY WARING

Risk of Fire, Consult a qualified electrician to ensure correct branch circuit conductor.
Turn off the main power at the circuit breaker before installing the fixture in order to prevent possible shock.

General

All electrical connections must be in accordance with local and National Electrical Code (N.E.C.) standards. If you are unfamiliar with proper electrical wiring connections obtain the services of a qualified electrician. Remove the fixture and the mounting package from the box and make sure that no parts are missing by referencing the illustration.

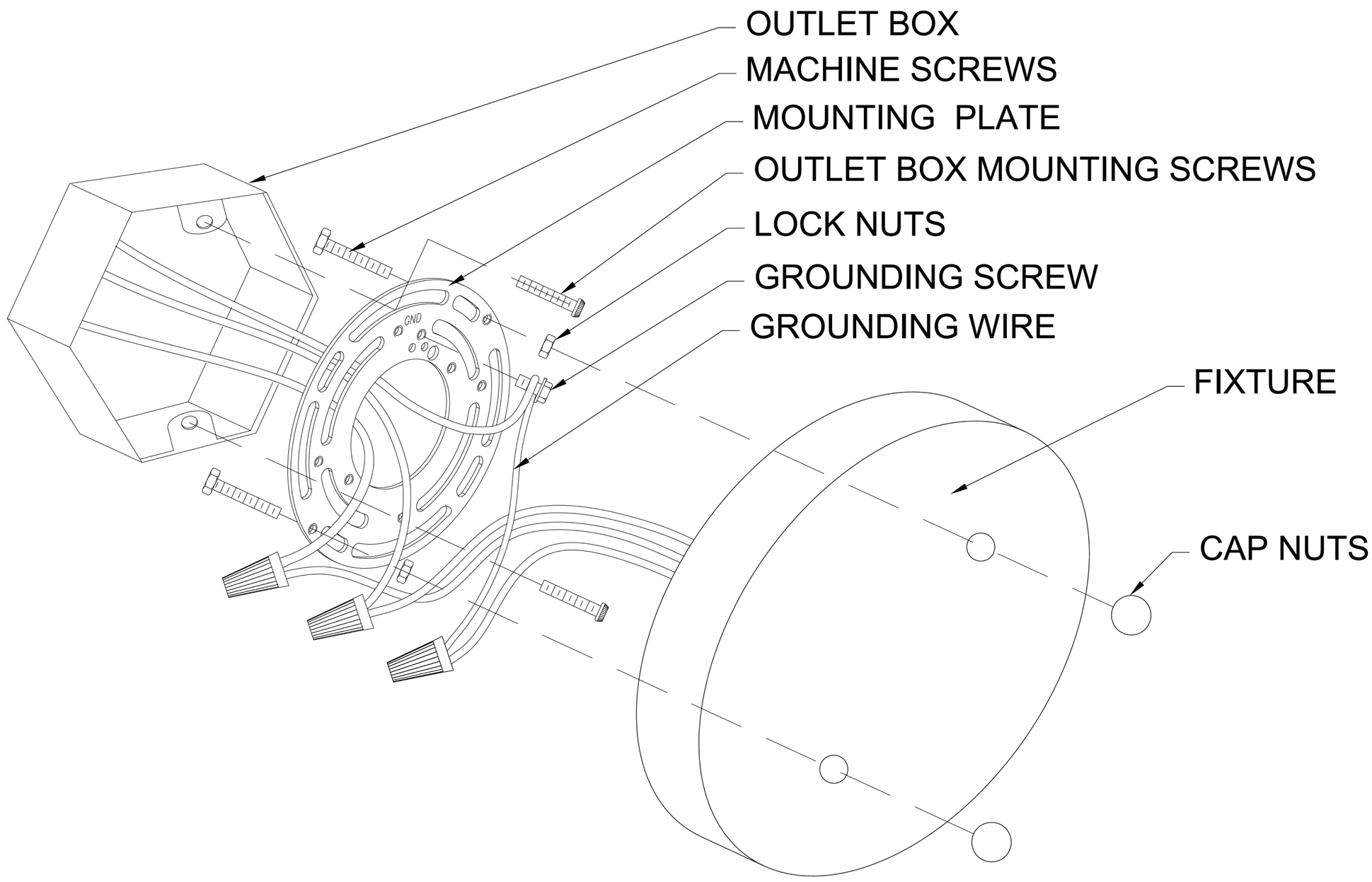

CAUTION: DISCONNECT POWER DURING INSTALLATION

1.) If you are replacing an existing fixture, disconnect and remove the old fixture. Expose the supply wiring from the outlet box.

2.) Thread the machine screws into the opposite side of the mounting plate from the green ground screw, lock the machine screws into place with lock nuts.

3.) Fasten the mounting plate to the outlet box using the two screws supplied with the outlet box.

4.) Spread the electrical wires so that the black wires are on one side of the outlet box and the white wires are on the other side.

5.) Grounding instructions:

A.) On fixtures where mounting plate is provided with a green ground screw and two raised dimples, Wrap ground wire from outlet box around green ground screw and tighten.

B.) On fixtures where mounting plate is provided with a green ground wire attached. Connect mounting plate ground wire to ground wire from outlet box with wire connector(not provided).
If fixture is provided with ground wire. Connect fixture ground wire to ground wire from outlet box with wire connector (not provided). After following the above steps. Never connect ground wire to black or white power supply wires.

6.) To make electrical connections: Connect the white wire(s) from the fixture to the white wire of this outlet box. Connect the black wire(s) from the fixture to the black wire of the outlet box. NOTE: Black wire from outlet box may be red, round & smooth and/or have copper conductor. White wire from outlet box may be square & ridged and/or have a silver conductor.
After wires are connected, tuck them carefully inside outlet box.

7.) Place fixture against mounting surface allowing the machine screws to pass through the fixture canopy. Secure with cap nuts.