Instruction Manual
Rattan Sun Lounger

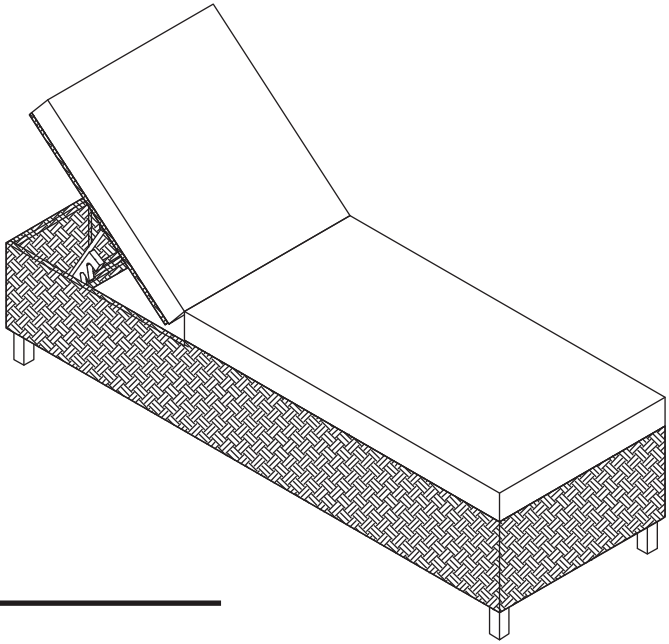

CONTENTS

Safety and care advice	1
Components	2
Assembly instructions	4
Copyright	7

⚠ SAFETY AND CARE ADVICE ⚠

PLEASE READ THESE INSTRUCTIONS CAREFULLY AND KEEP FOR FUTURE REFERENCE

- **Warning:** Please lift with care.
- Check you have all the components and tools listed on pages 2 and 3.
- Remove all fittings from the plastic bags and separate them into their groups.
- Keep children and animals away from the work area, small parts could choke if swallowed.
- Make sure you have enough space to lay out the parts before starting.
- Do not stand or put weight on the product, this could cause damage.
- Assemble the item as close to its final position (in the same room) as possible.
- Assemble on a soft level surface to avoid damaging the unit or your floor (use opened out unit carton).

- We do not recommend the use of power drill/drivers for inserting screws, as this could damage the unit. Only use hand screwdrivers.
- Dispose of all packaging carefully and responsibly.

CARE AND MAINTENANCE

- Only clean using a damp cloth and mild detergent, do not use bleach or abrasive cleaners.
- From time to time check that there are no loose screws on this unit.
- This product should not be discarded with household waste. Take to your local authority waste disposal center.

Note: If required the next page can be cut out and used as reference throughout the assembly. Keep this page with these instructions for future reference.

COMPONENTS

Please check you have all the panels listed below:

1PERSON
ASSEMBLY
RECOMMENDED

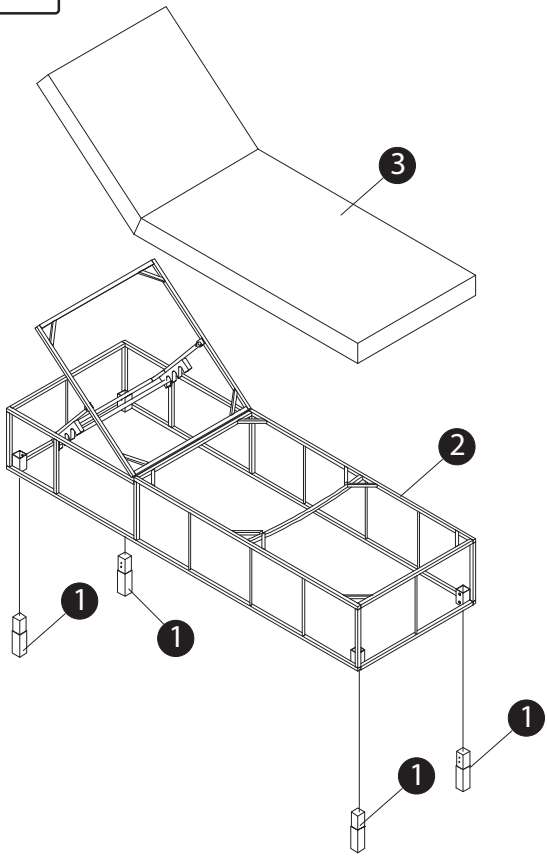

1 Legs	x4	
2 Seat	x1	
3 Cushion	x1	

COMPONENTS

Please check you have all the fittings listed below:

A

Bolt M6x20 mm (8 pcs)

B

Flat Washer (9 pcs)

C

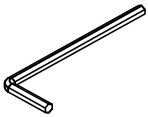

Allen Key (1 pc)

D

Cover (4 pcs)

ASSEMBLY INSTRUCTIONS

Step: 1

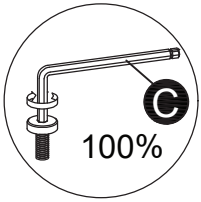

A		8	
B		8	
C		1	
D		4	

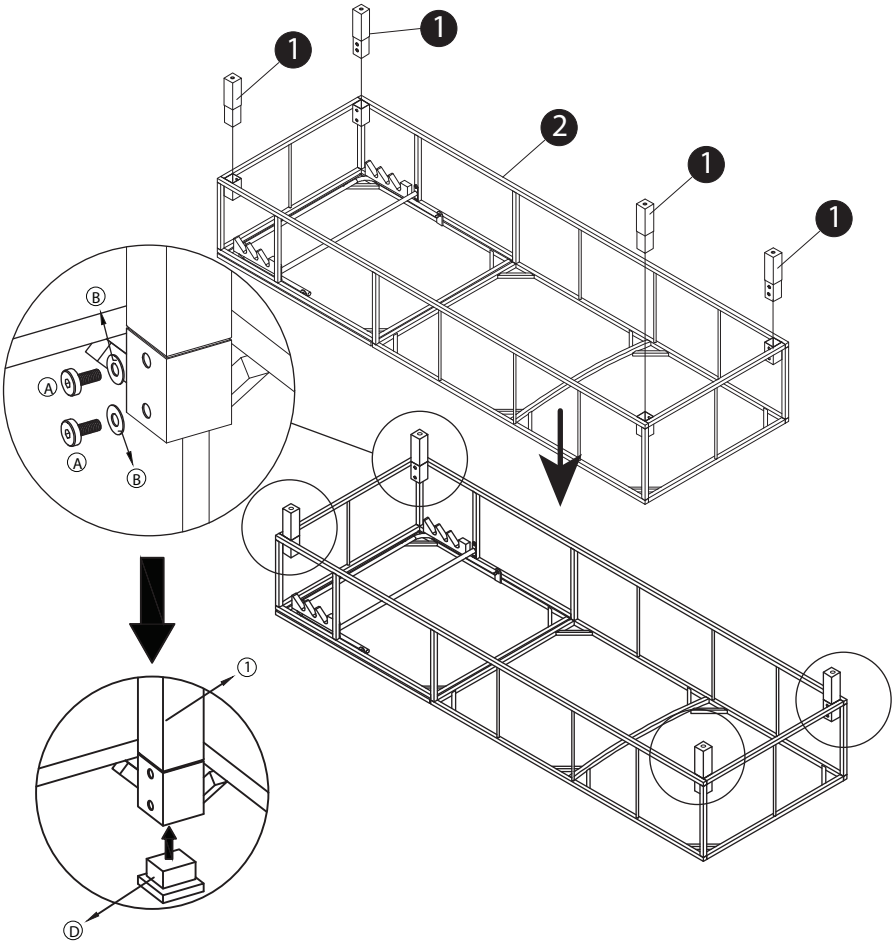

Step: 2

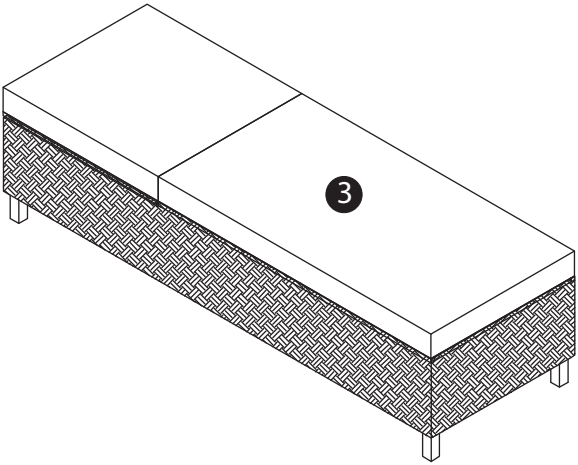

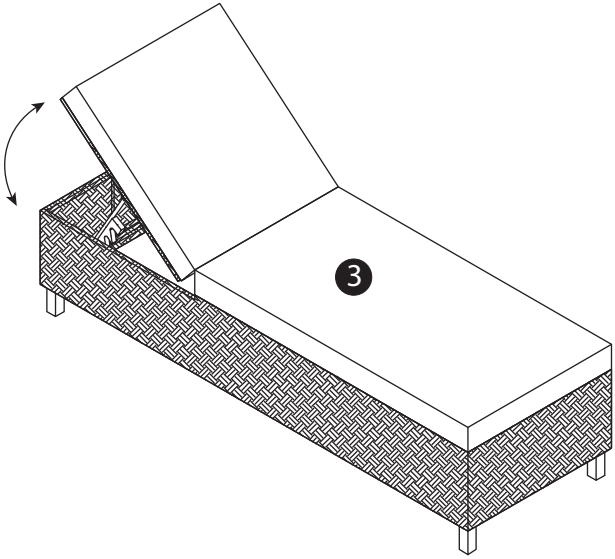

IF YOU FIND A DEFECTIVE PART

We fully stock all parts and components. Any defective part can be quickly replaced. Take note of the defective part number in manual and we will arrange a quick replacement.

COPYRIGHT

All material in this instruction manual is copyrighted

Any unauthorised use may violate worldwide copyright, trademark and other laws.