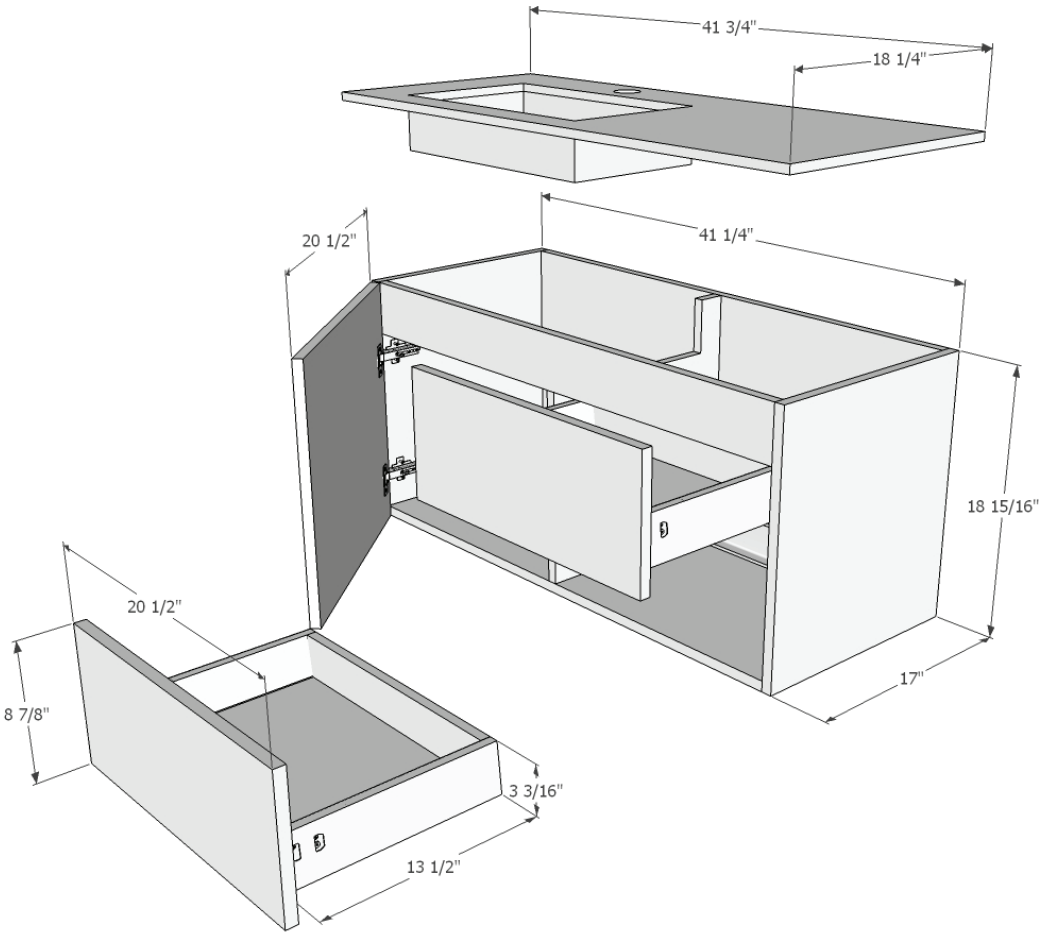

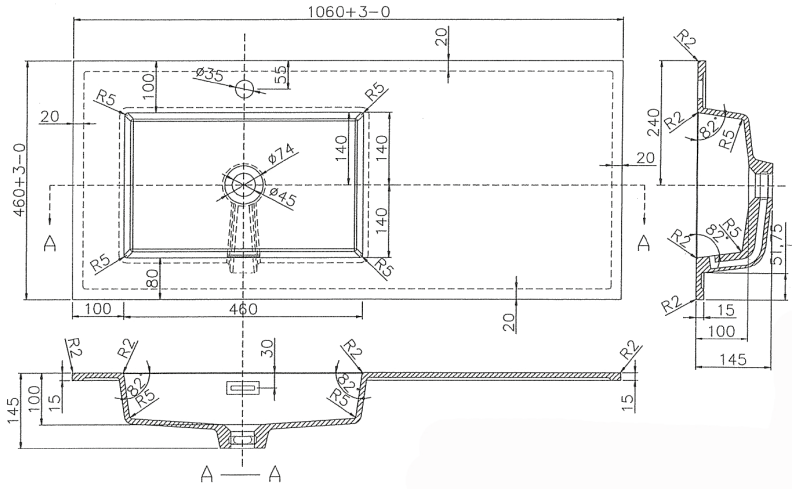

SINK DETAIL

Flow Rate: 10.15sec/gal

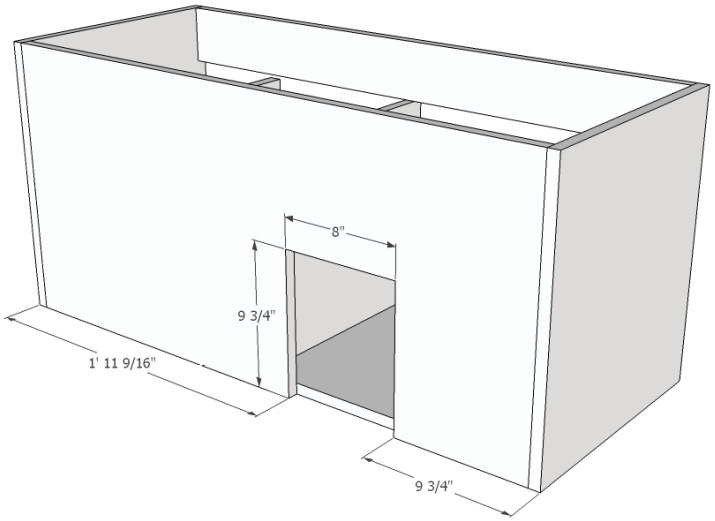

BACK DETAIL

DESCRIPTION

42" Beachwood Collection - 1 Door 2 Drawers

CABINET SIZE

42" WIDE x 18 15/16" HIGH x 17" DEEP