Assembly Guide

PXLFIP124MS-1

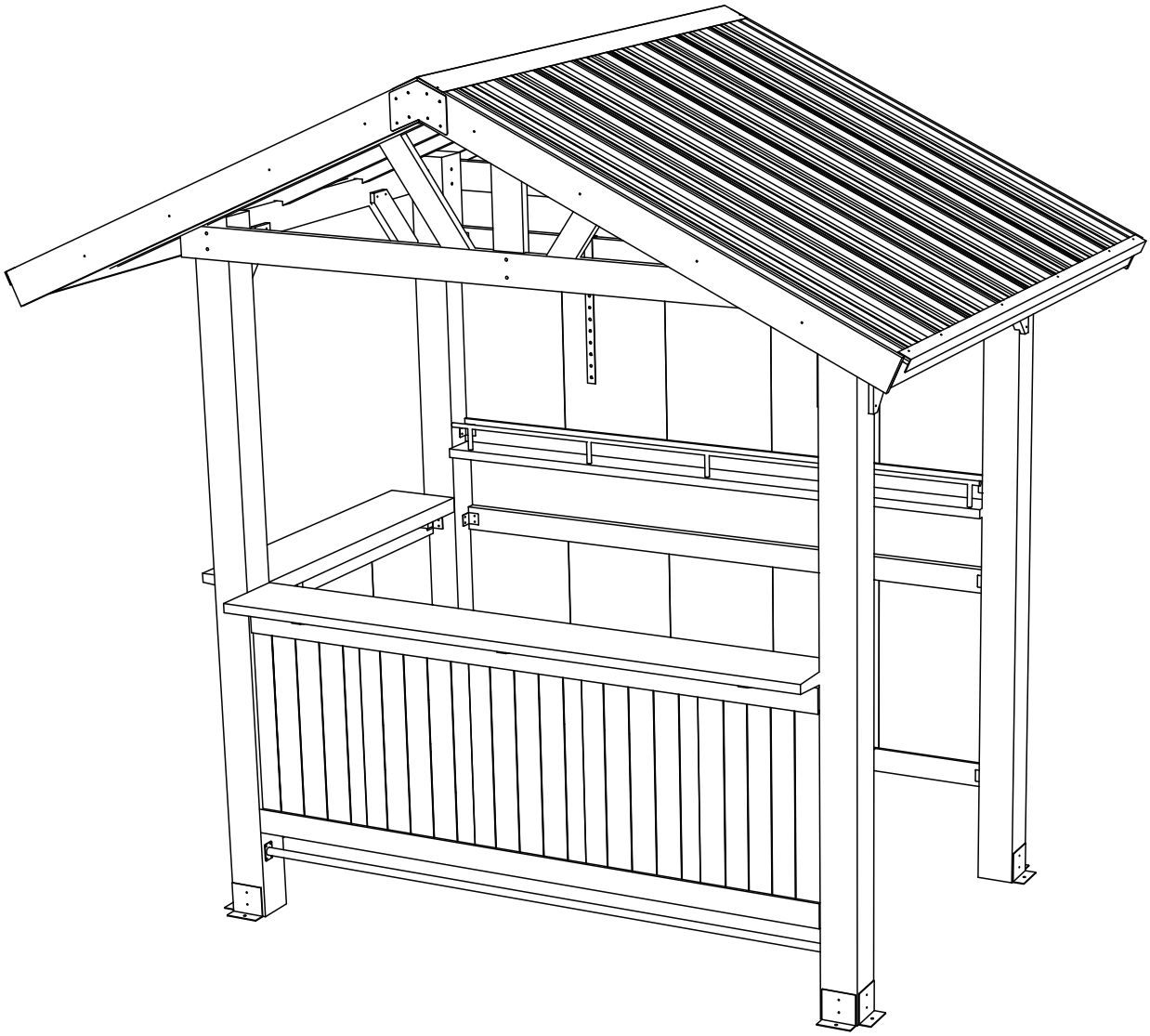

READ AND SAVE THIS INSTRUCTIONS FOR FUTURE USE

ASSEMBLY & INSTRUCTION MANUAL

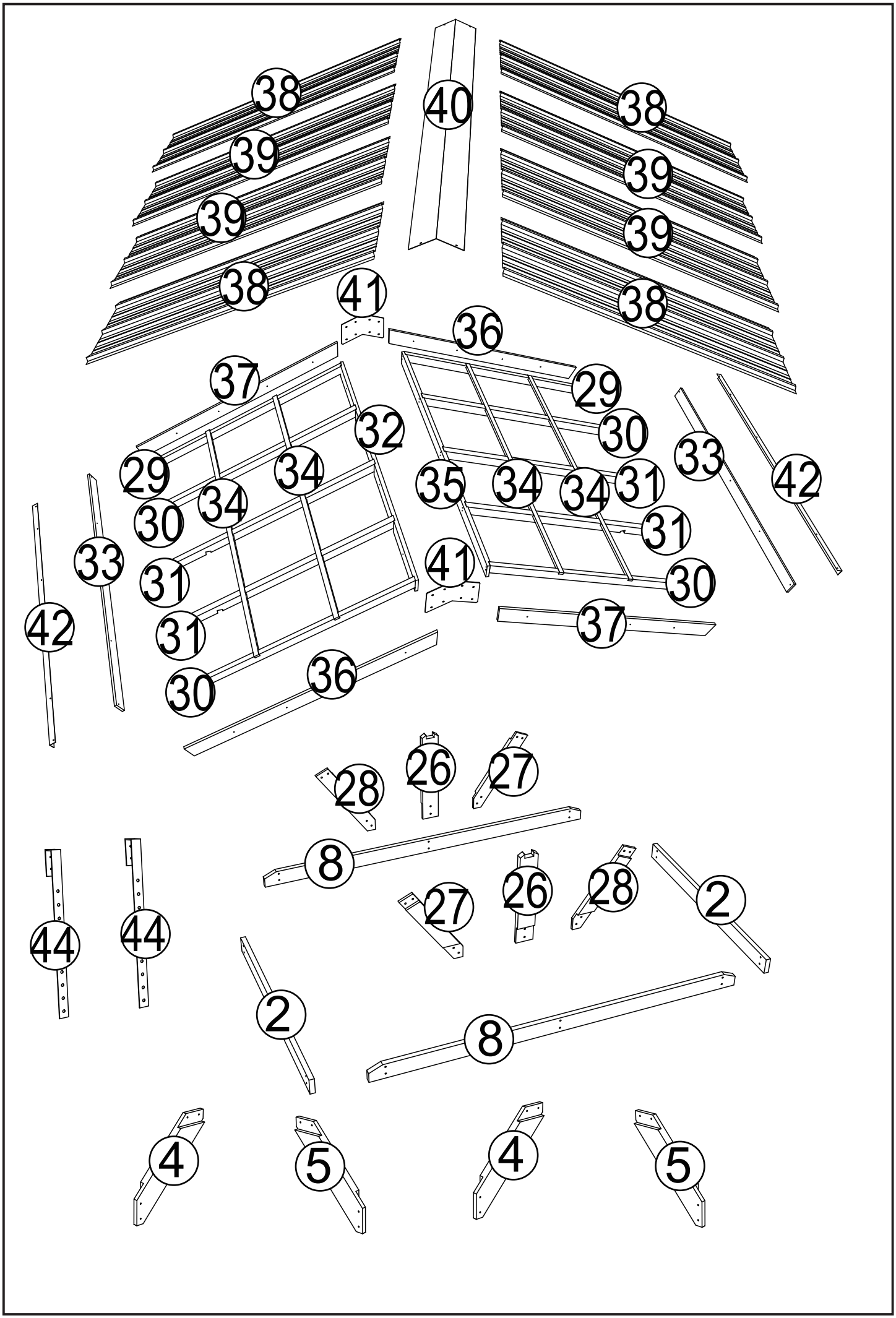
38
40
38
39
39
39
38
38
41
36
37
29
32
30
33
42
29
34
35
34
34
31
34
30
31
33
41
30
42
31
37
31
30
36
26
27
28
8
44
44
27
26
28
2
2
8
4
5
4
5

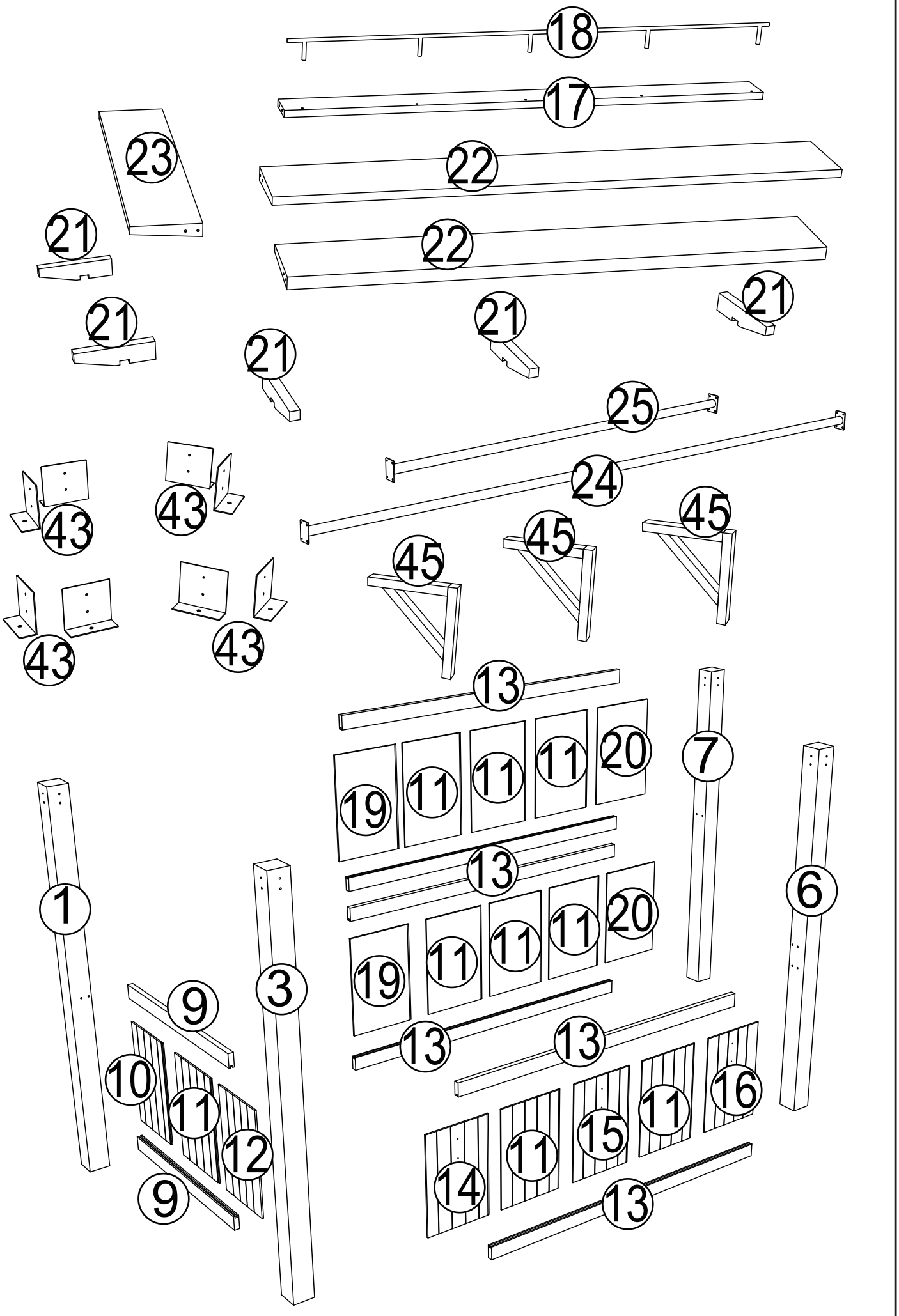
18
17
23
22
22
21
21
21
21
21
25
24
43
43
43
43
45
45
45
13
19
11
11
11
20
7
6
1
13
19
11
11
11
20
3
9
13
13
10
11
12
16
15
11
11
14
9
13

BOX-A

①x1

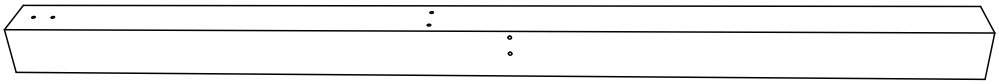

③x1

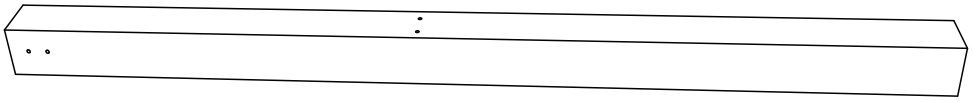

BOX-B

⑥x1

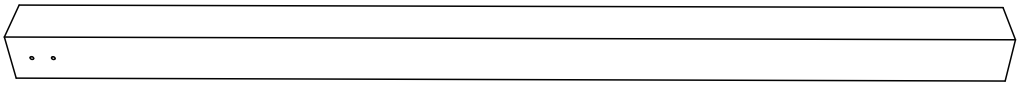

⑦x1

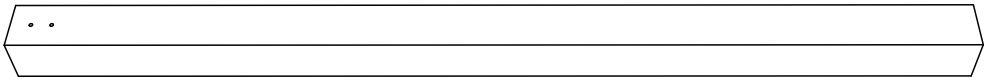

BOX-C

⑧x2

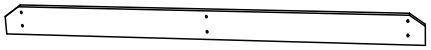

㉚x1

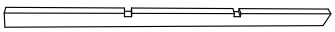

㉜x1

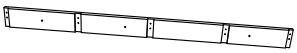

㉞x2



㉟x1

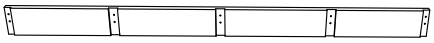

㊲x1

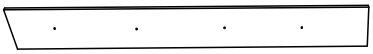

㊵x1

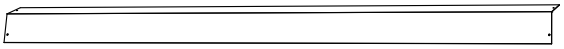

BOX-D

②x1

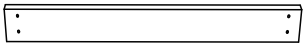

⑨x2



⑩x1

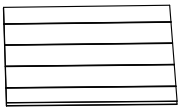

⑪x9

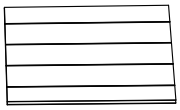

⑫x1



⑭x1

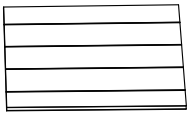

⑮x1



⑯x1



⑲x2

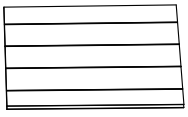

⑳x2



㉚x3

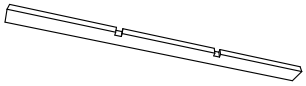

㊳x4

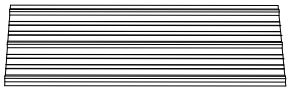

BOX-D

㊴x4



㊶x2

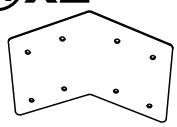

㊸x8

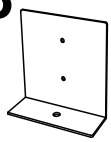

㊹x2

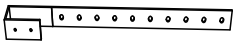



Hardware Kit

BOX-E

⑬x6



㉝x2

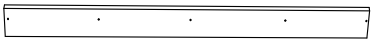

㉞x2



㊱x2



㊲x1



BOX-F

②x1

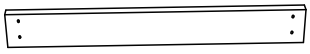

④x2

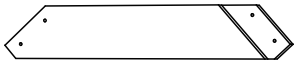

⑤x2

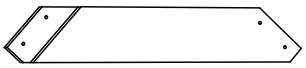

⑰x1

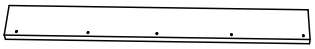

⑱x1



㉑x5

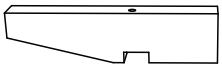

㉒x2



㉓x1

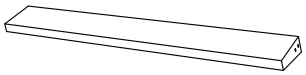

㉔x1

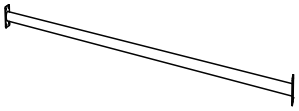

㉕x1



㉖x2



㉗x2



㉘x2



㉙x2

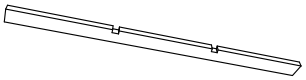

㉛x4

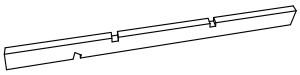

㊷x2

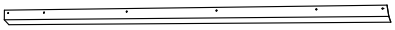

㊺x3

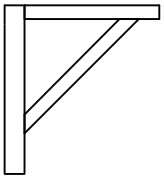

PART LIST

①x1 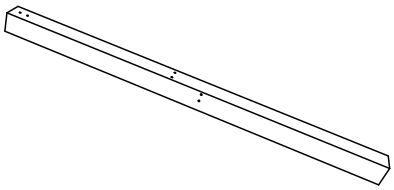	②x2 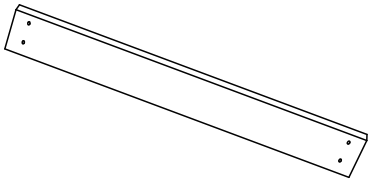	③x1 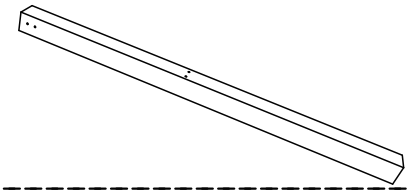
④x2 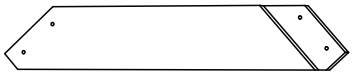	⑤x2 	⑥x1 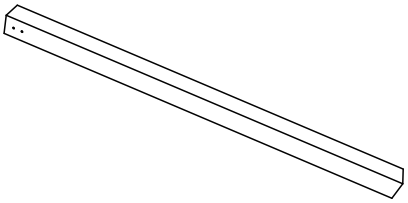
⑦x1 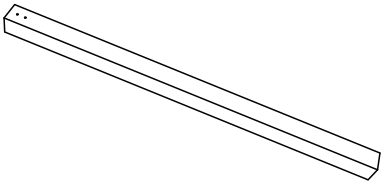	⑧x2 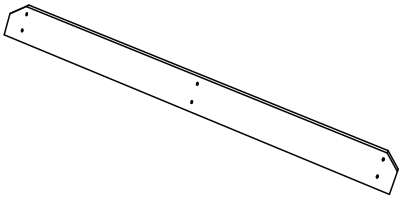	⑨x2 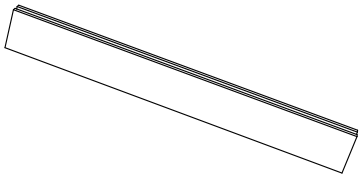
⑩x1 	⑪x9 	⑫x1 
⑬x6 	⑭x1 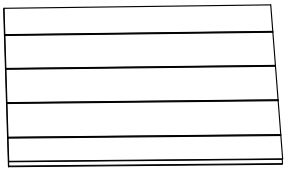	⑮x1 
⑯x1 	⑰x1 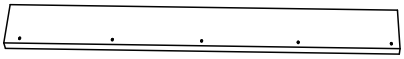	⑱x1 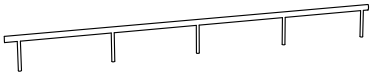
⑲x2 	⑳x2 	㉑x5 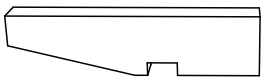

PART LIST

㉒ x2

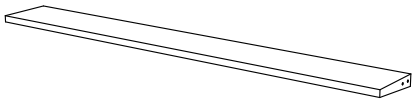

㉓x1

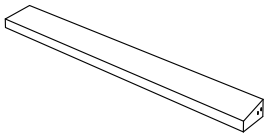

㉔x1

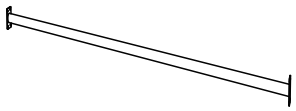

㉕x1

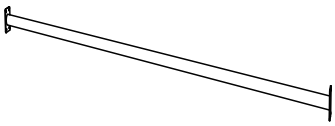

㉖x2



㉗x2



㉘x2



㉙x2

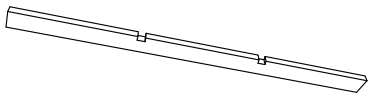

㉚x4

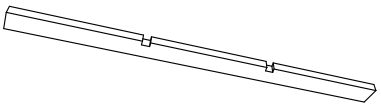

㉛ x4

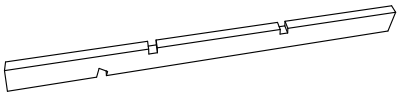

㉜x1

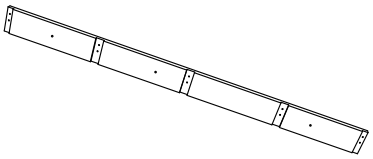

㉝x2

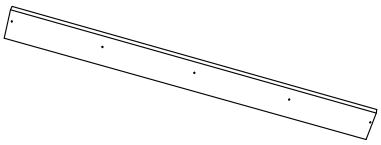

㉞x4

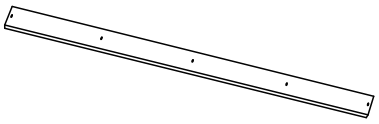

㉟x1

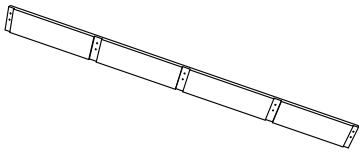

㊱x2

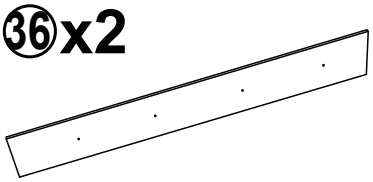

㊲x2

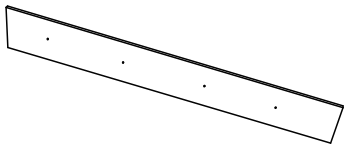

㊳x4



㊴x4

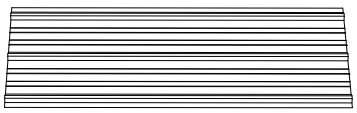

㊵x1

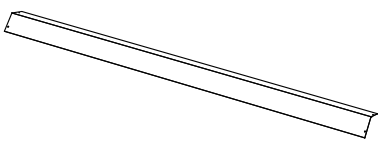

㊶x2

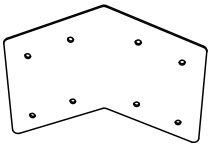

㊷x2

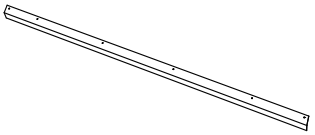

㊸x8

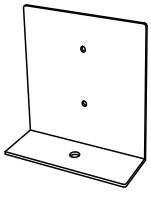

㊹x2

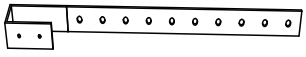

㊺x3

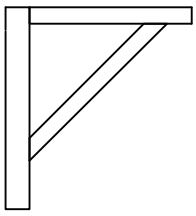

PART LIST

Ⓐ x16

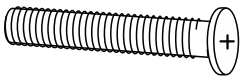

M8x50

Ⓑ x16

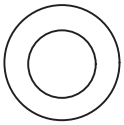

M8

Ⓒ x42

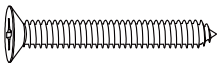

M4x40

Ⓓ x80

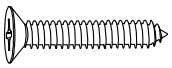

M4x20

Ⓔ x16

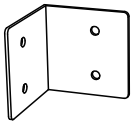

Ⓕ x21

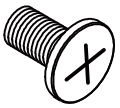

M6x15

Ⓖ x12

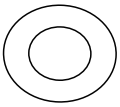

M6

Ⓗ x32

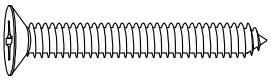

M4x50

Ⓘ x80

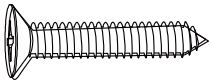

M4x25

Ⓙ x4

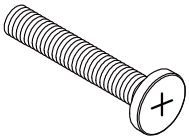

M6x40

Ⓚ x48

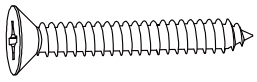

M4x30

Ⓛ x68

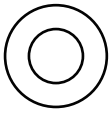

M5

Ⓜ x32

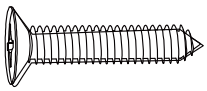

M4x15

Ⓝ x8

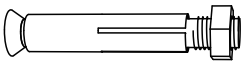

M6x50

Ⓞ x1

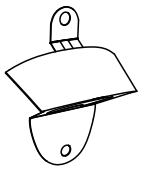

Ⓟ x1

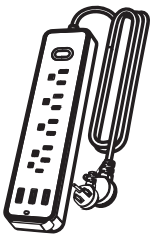

Ⓠ x1

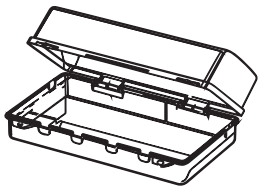

01

PART	NO	QIT
	①	1
	②	1
	③	1
	Ⓐ	4
	Ⓑ	4

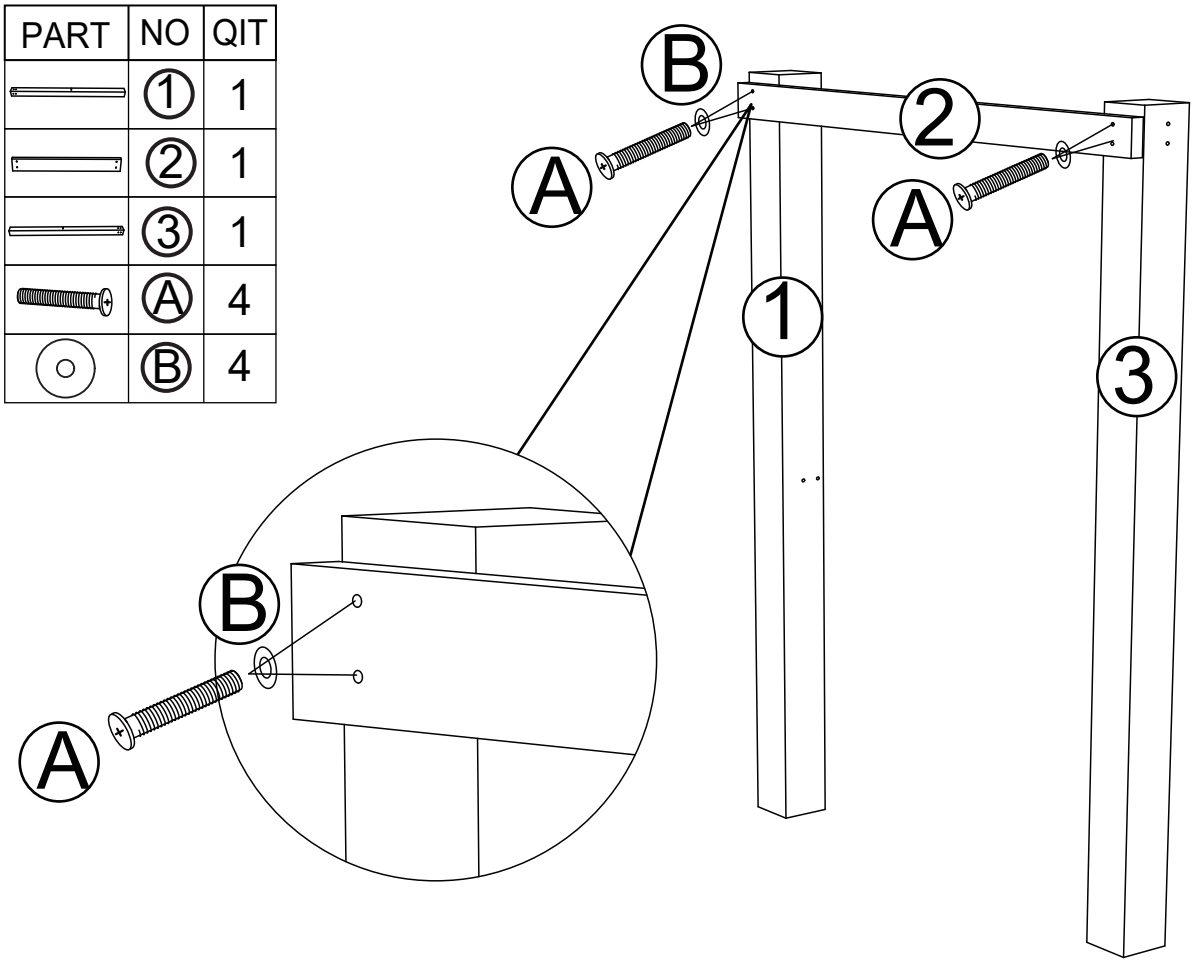

02

PART	NO	QIT
	④	1
	⑤	1
	Ⓒ	4

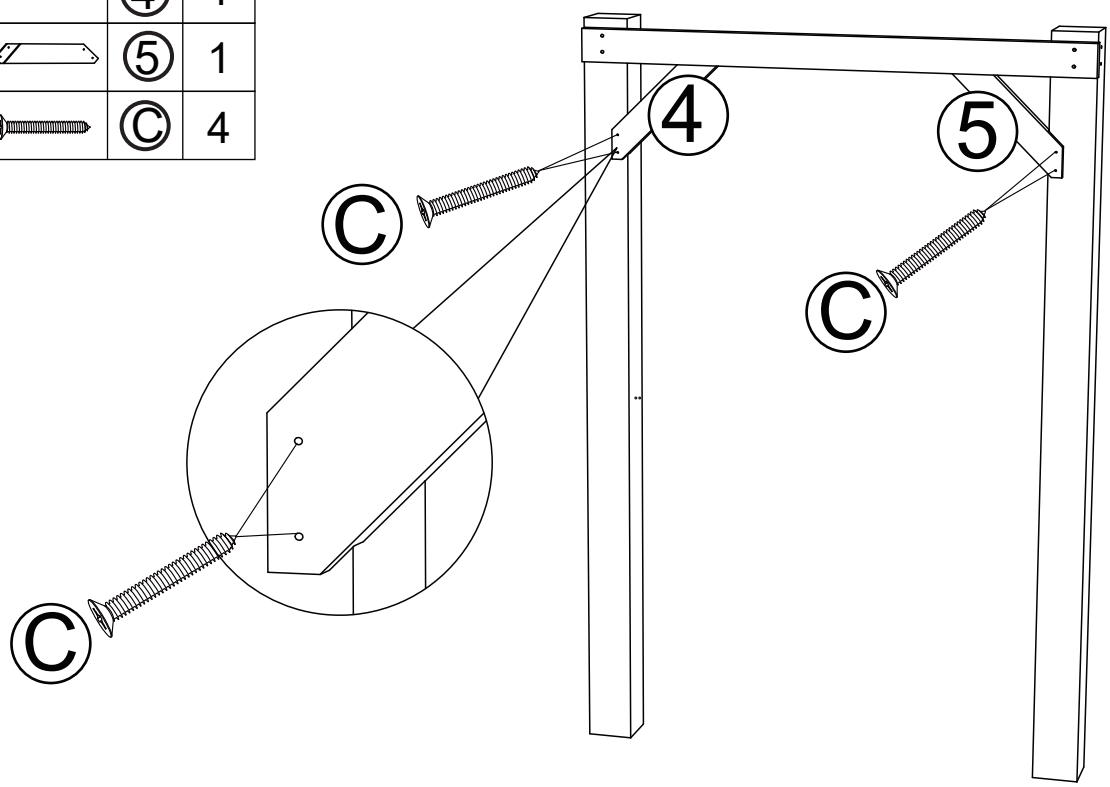

03

PART	NO	QIT
	Ⓒ	4

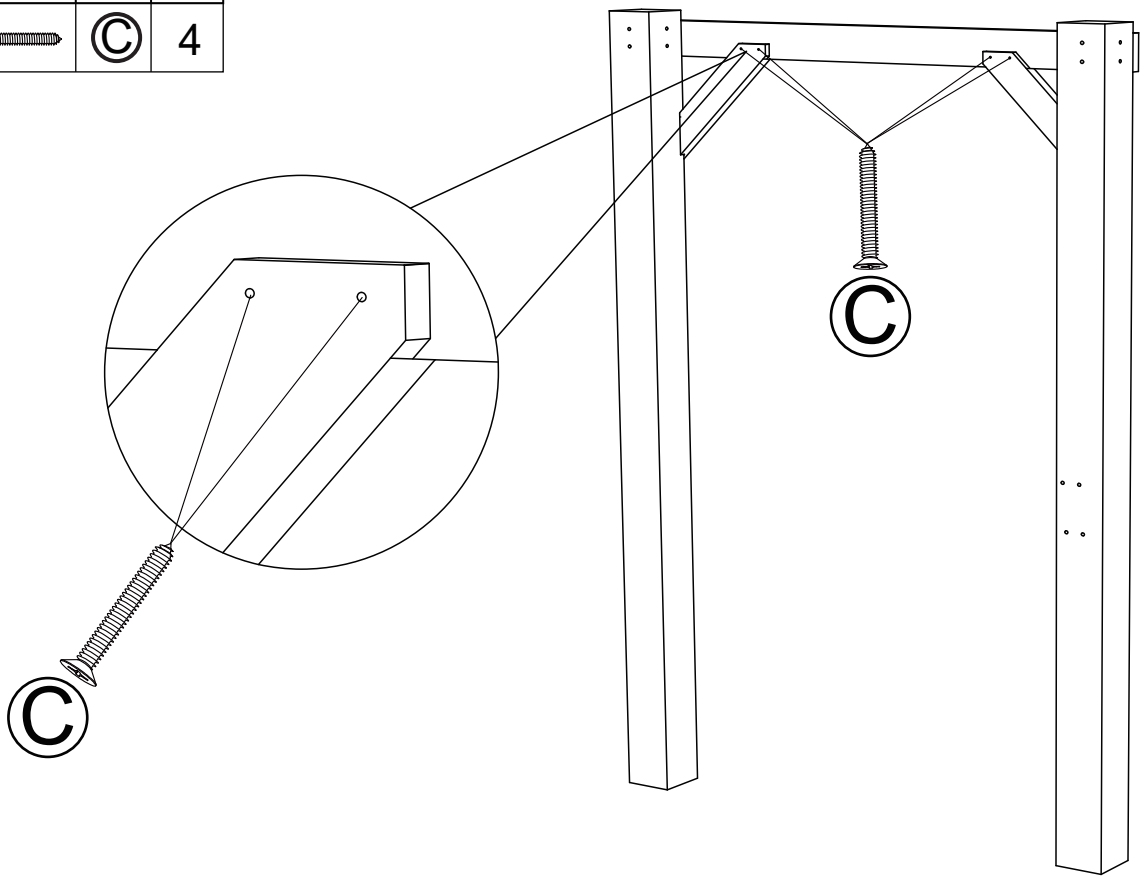

04

PART	NO	QIT
	②	1
	⑥	1
	⑦	1
	Ⓐ	4
	Ⓑ	4

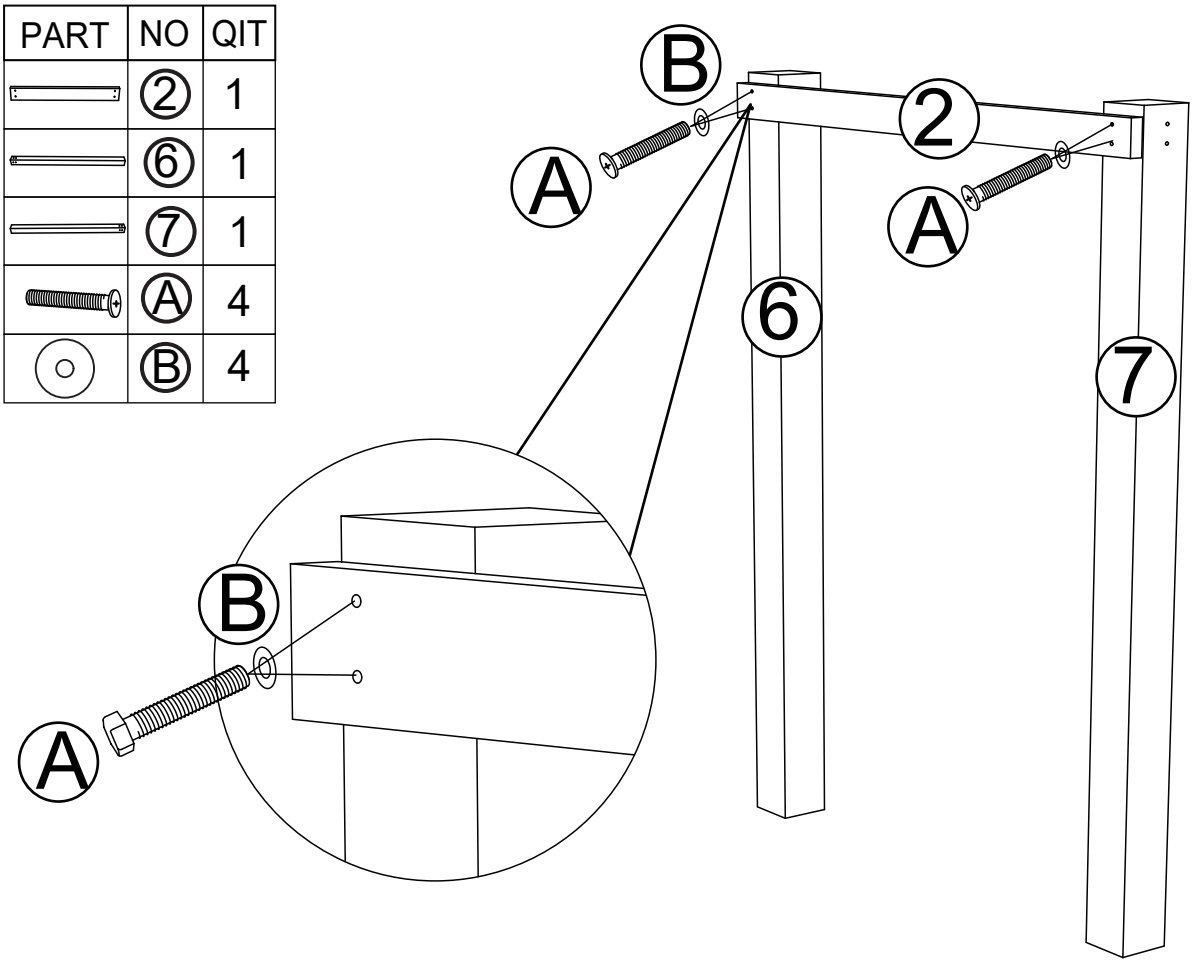

05

PART	NO	QIT
	④	1
	⑤	1
	Ⓒ	4

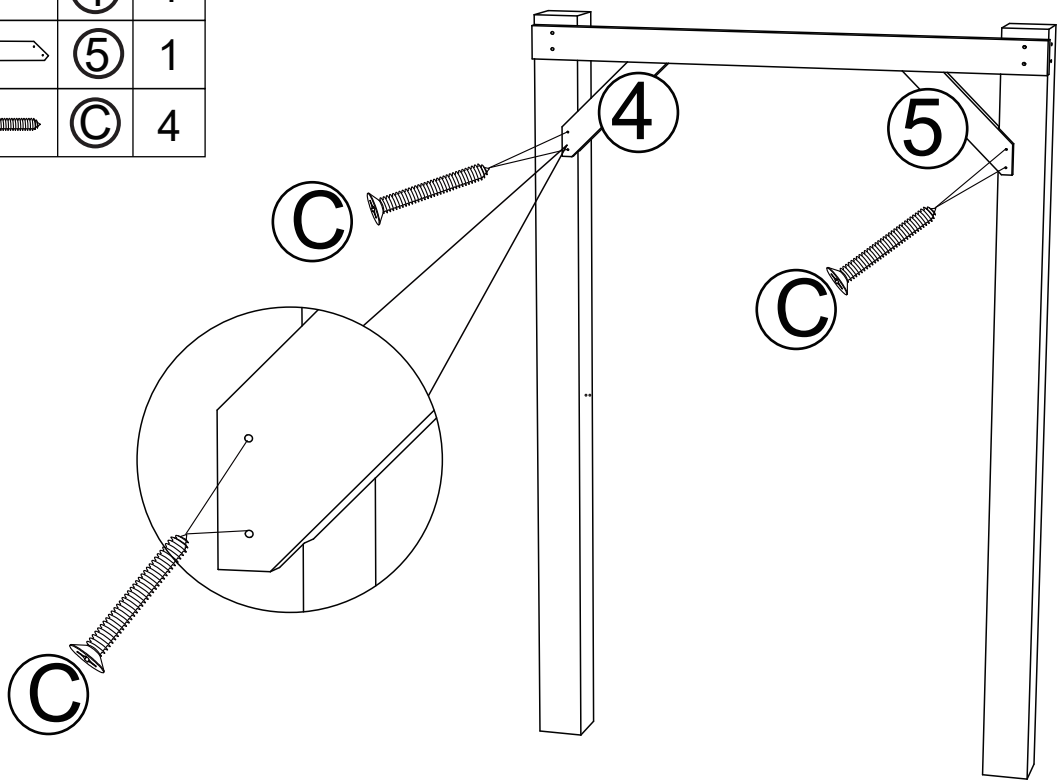

06

PART	NO	QIT
	Ⓒ	4

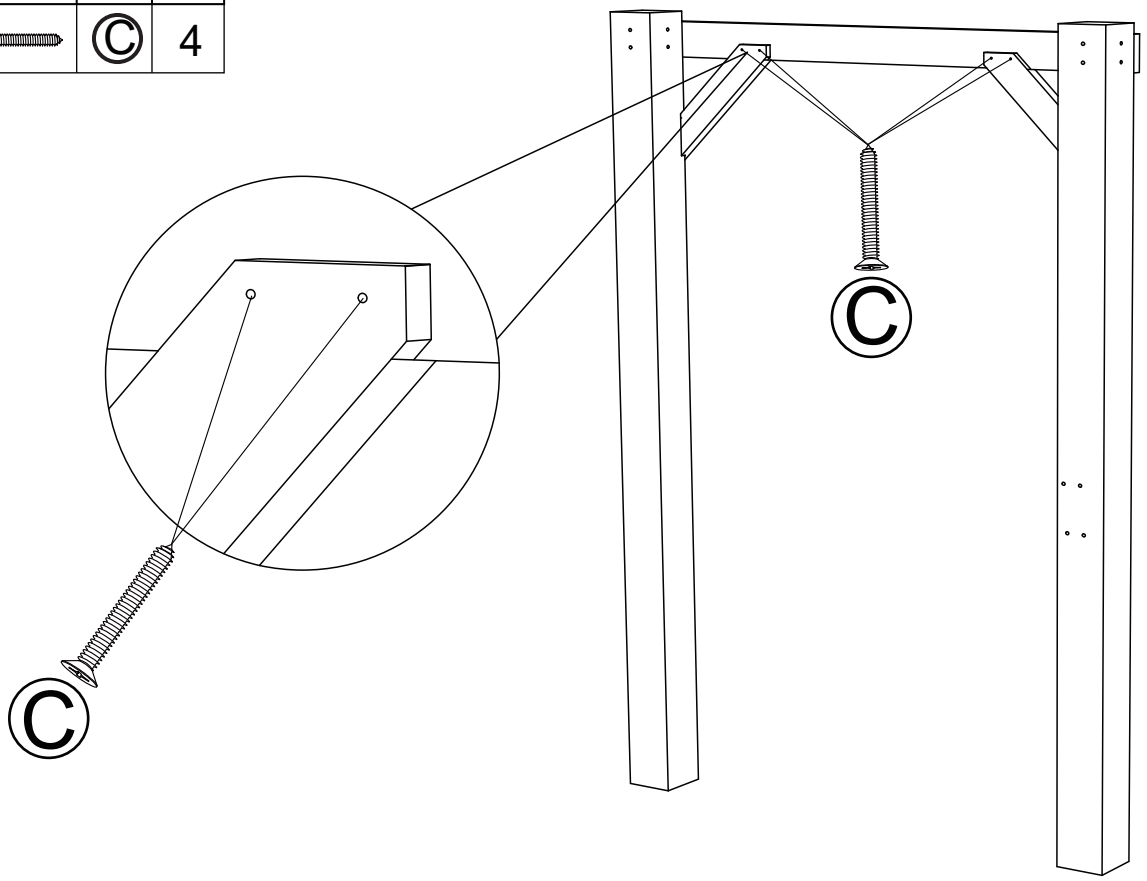

07

PART	NO	QIT
	⑧	1
	Ⓐ	4
	Ⓑ	4

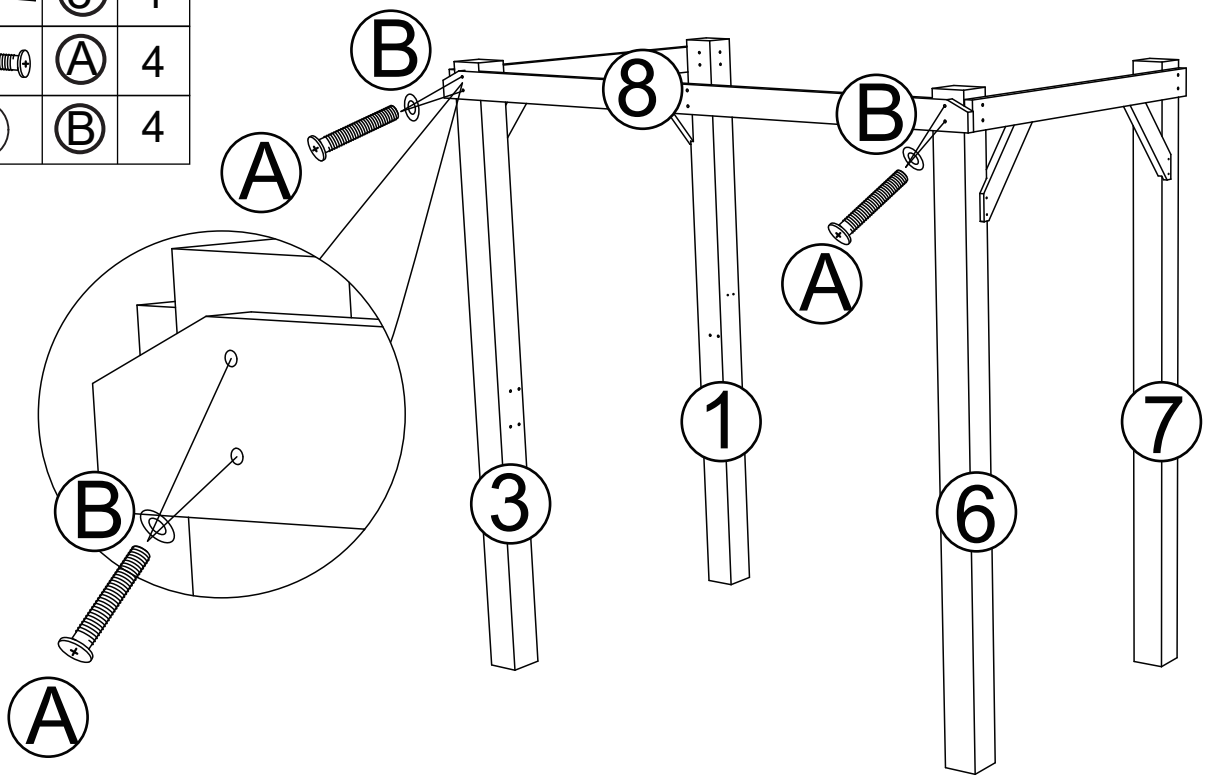

08

PART	NO	QIT
	⑧	1
	Ⓐ	4
	Ⓑ	4

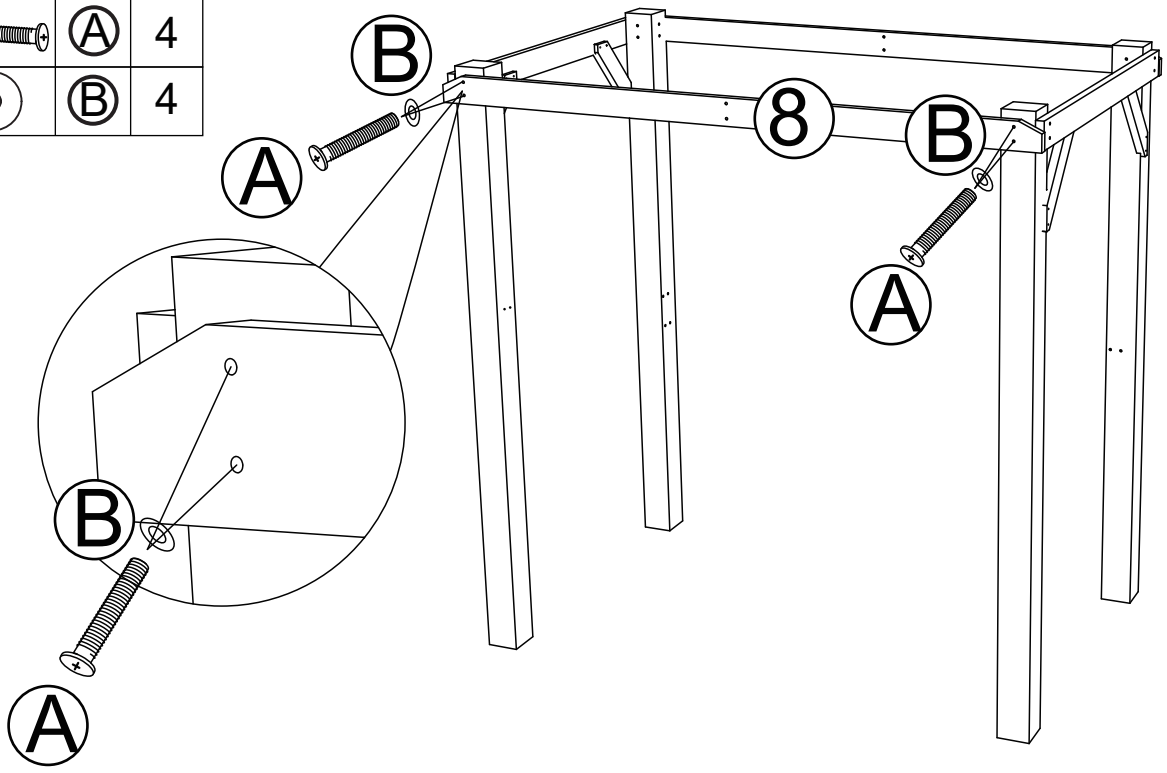

09

PART	NO	QIT
	⑨	1
	Ⓓ	8
	Ⓔ	2

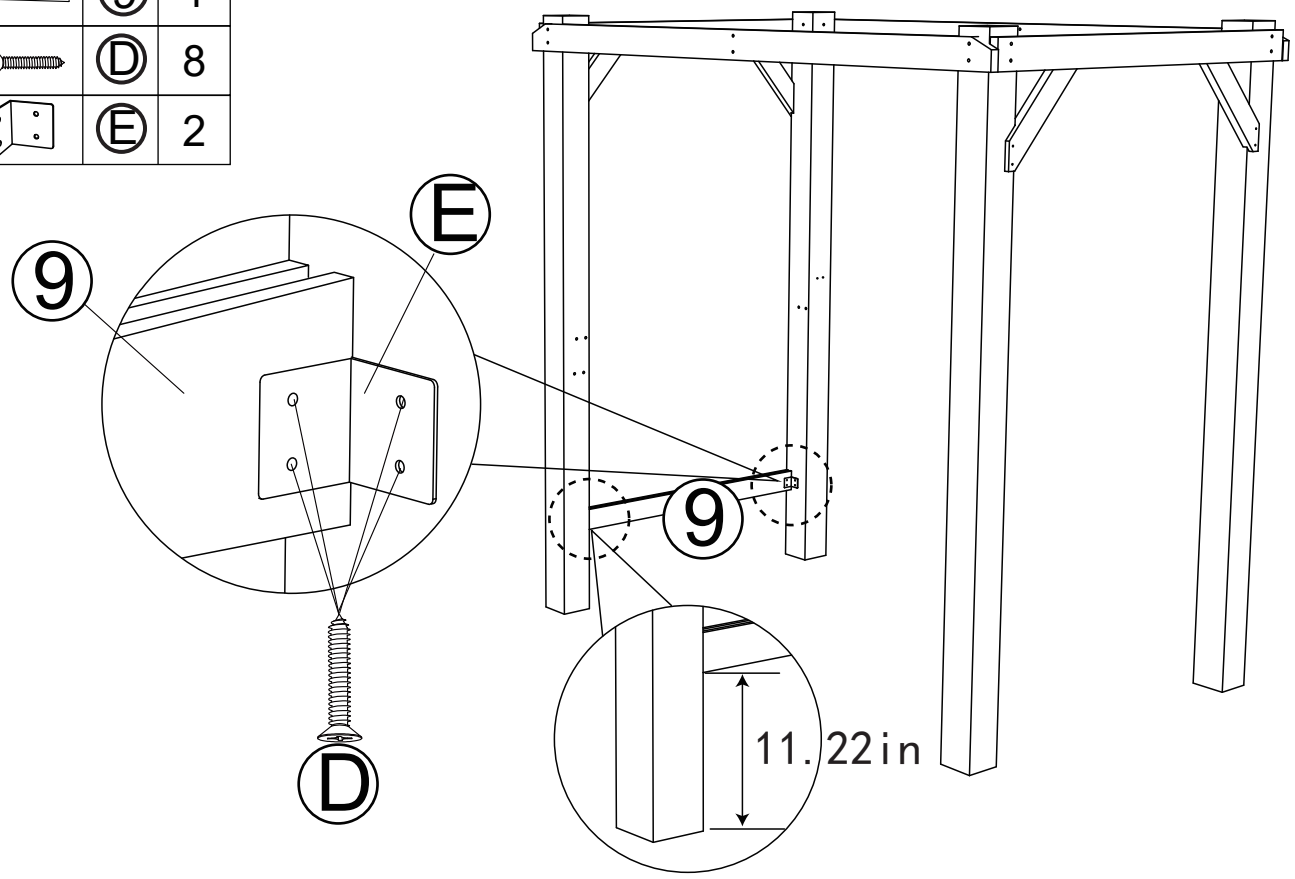

10

PART	NO	QIT
	⑩	1
	⑪	1
	⑫	1

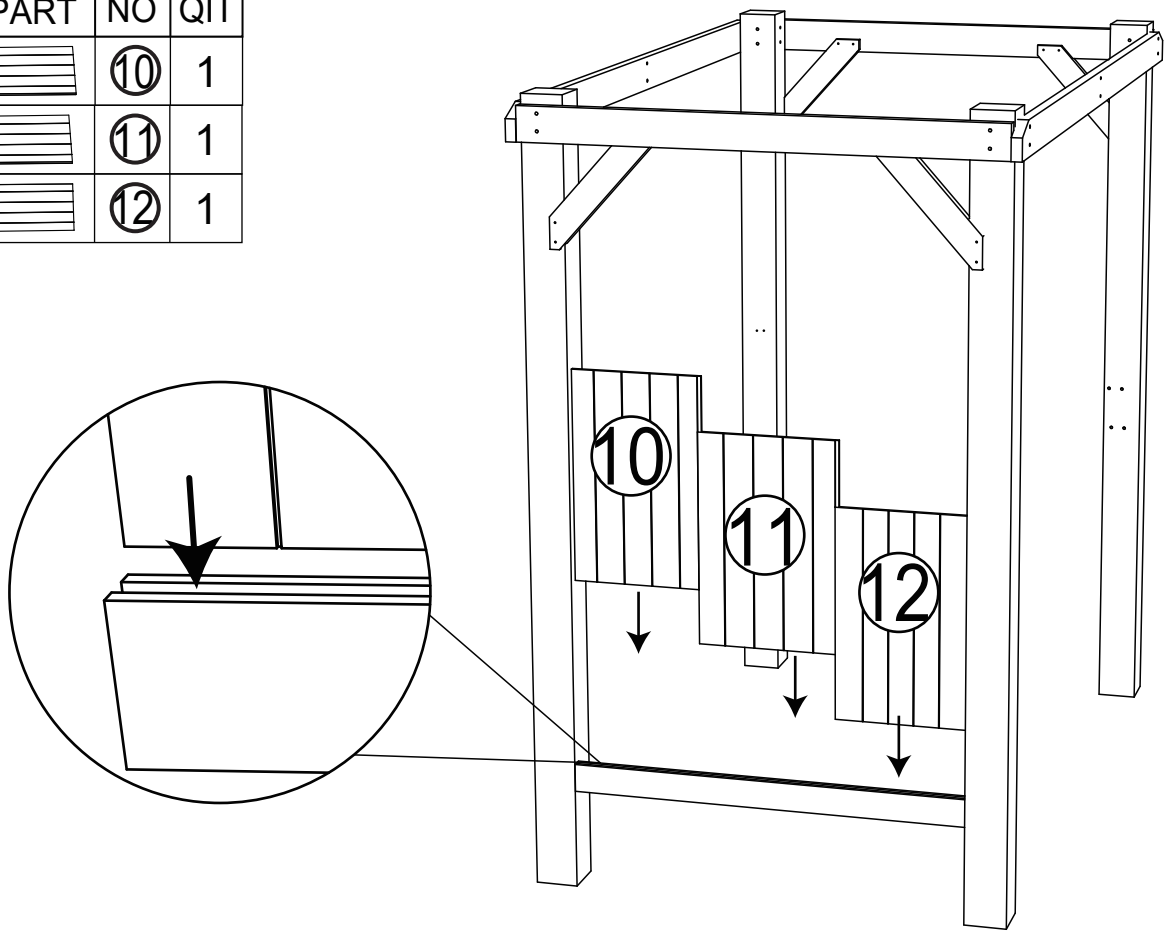

11

PART	NO	QIT
	⑨	1
	Ⓓ	8
	Ⓔ	2

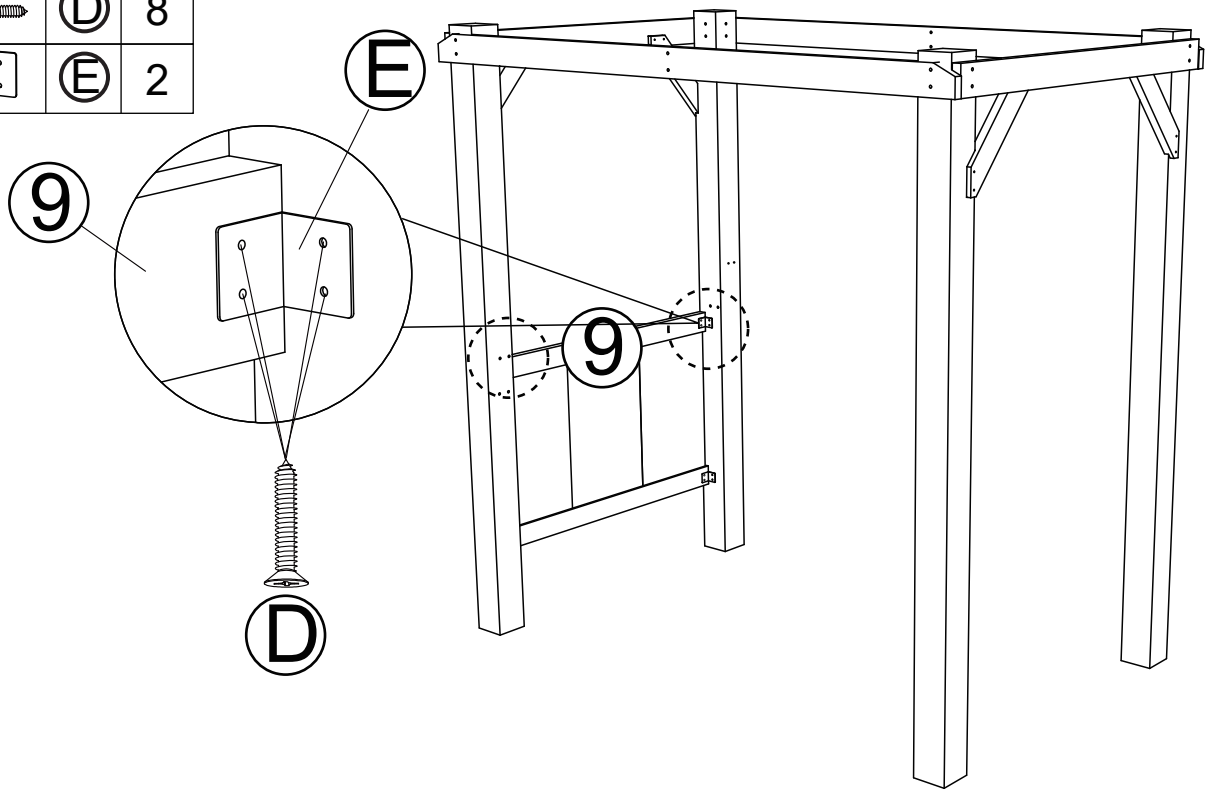

12

PART	NO	QIT
	⑬	1
	Ⓓ	8
	Ⓔ	2

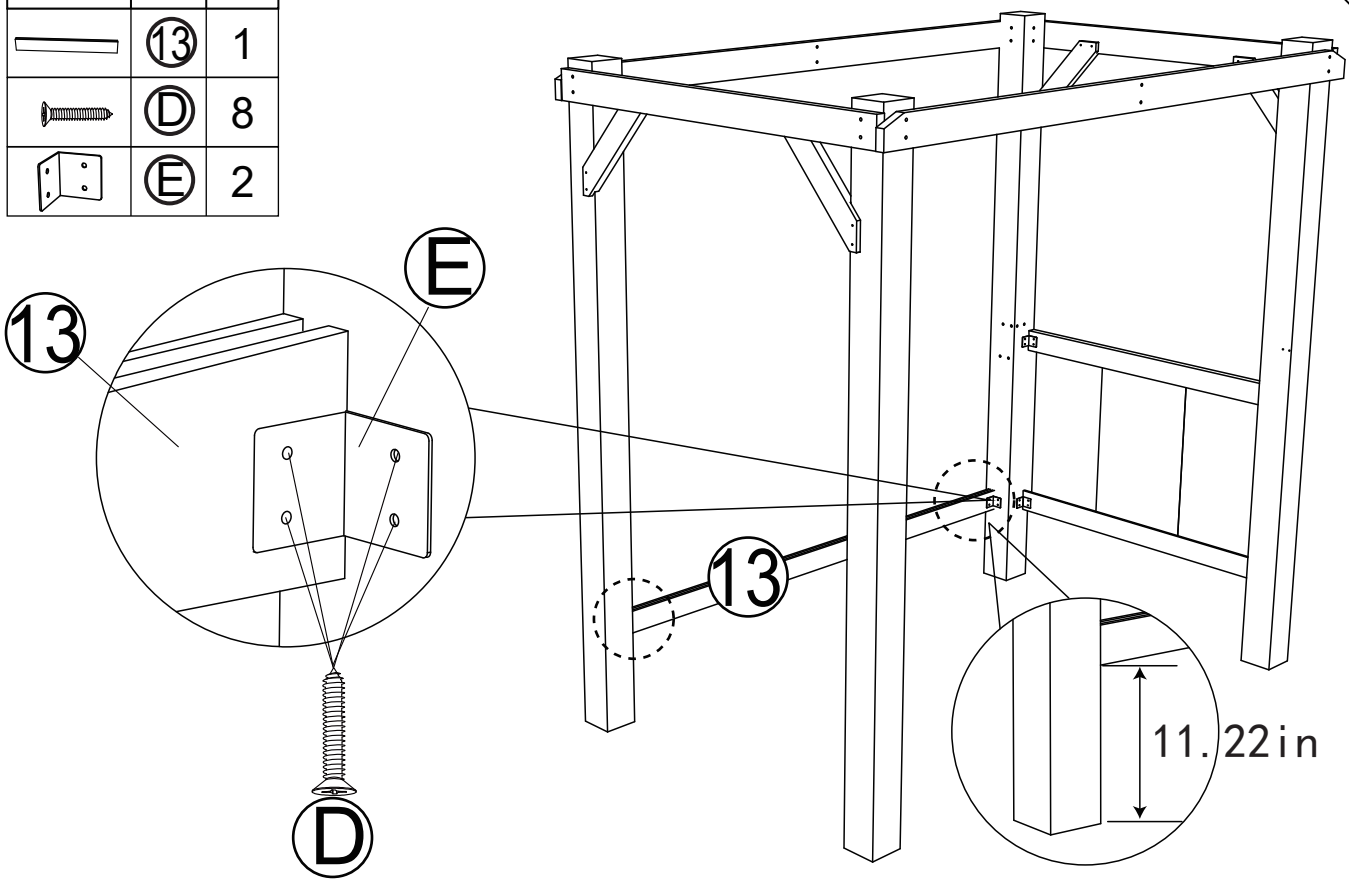

13

PART	NO	QIT
	⑪	2
	⑭	1
	⑮	1
	⑯	1

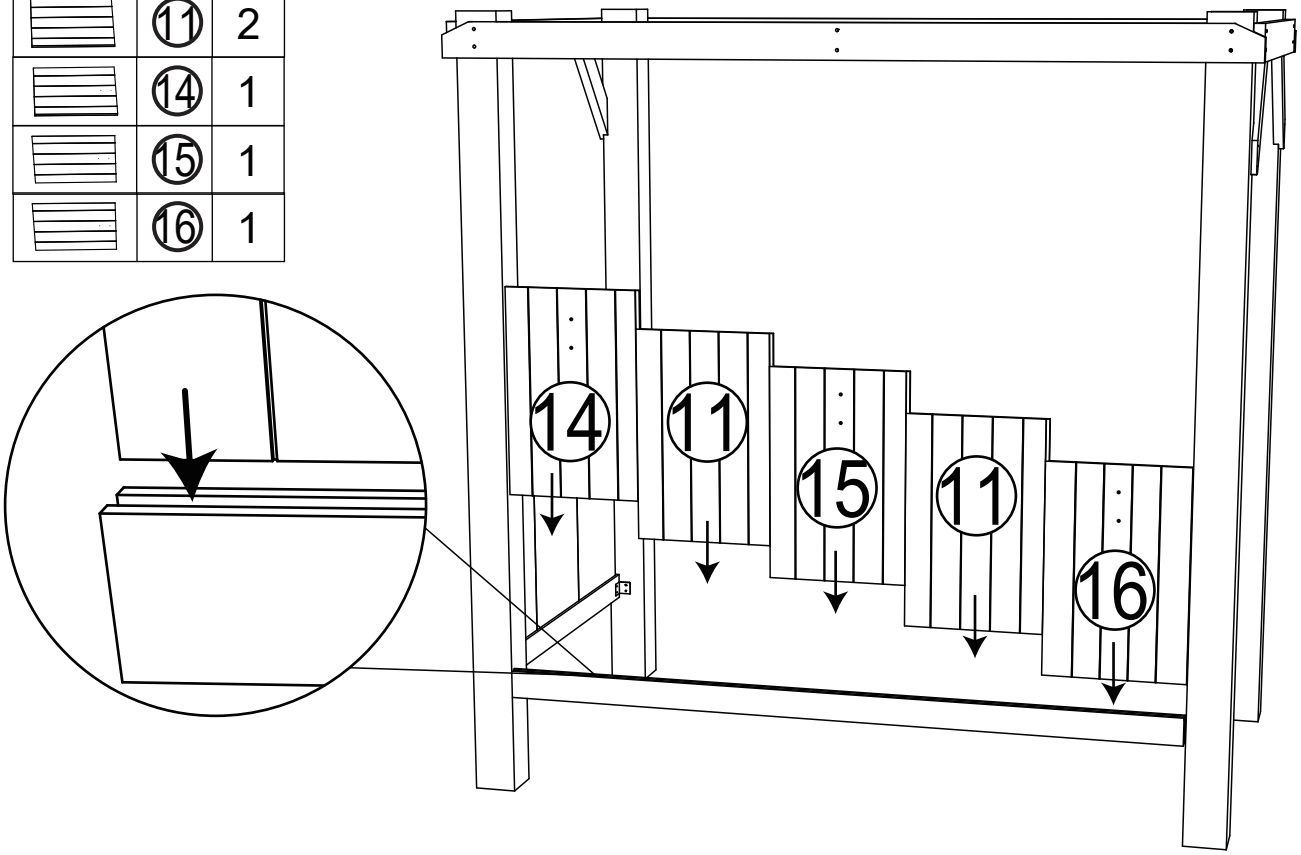

14

PART	NO	QIT
	⑬	1
	Ⓓ	8
	Ⓔ	2

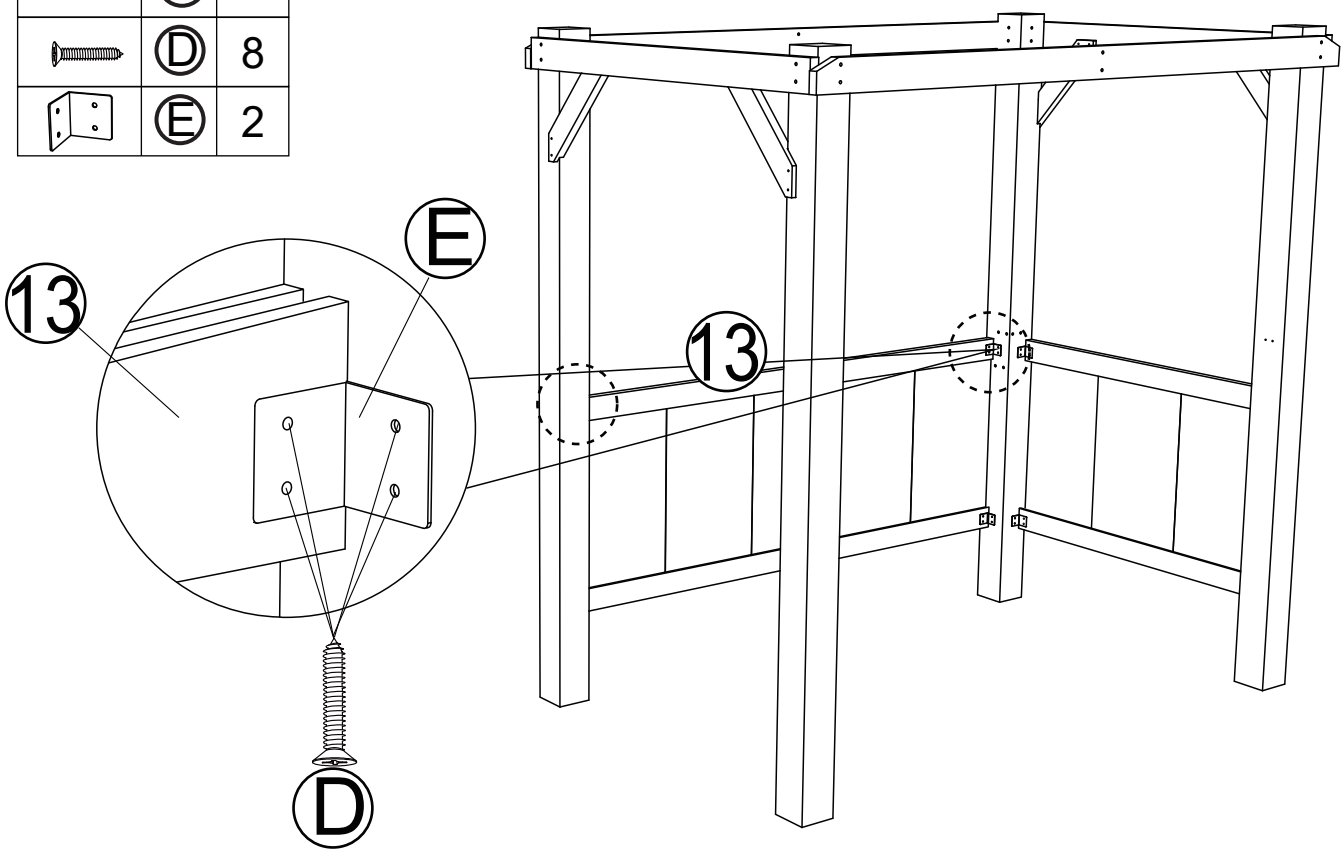

15

PART	NO	QIT
	⑰	1
	⑱	1
	Ⓕ	5

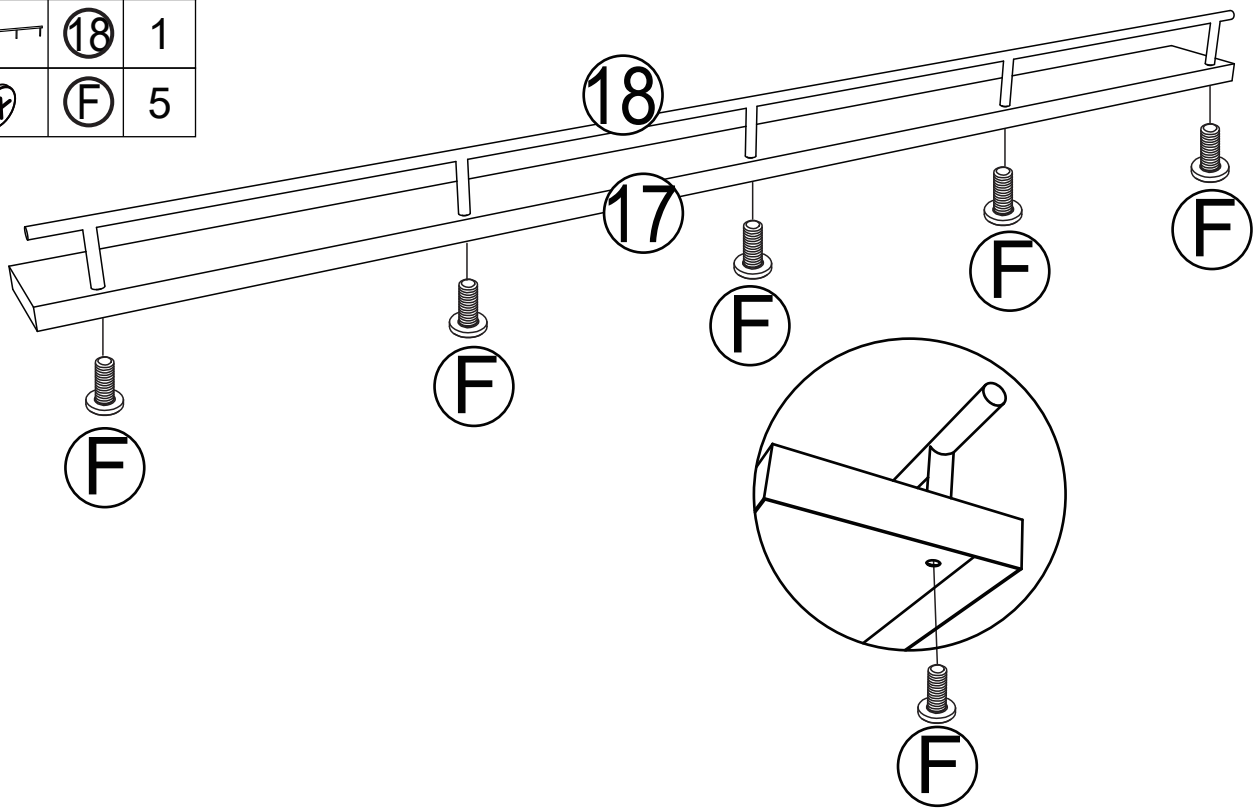

16

PART	NO	QIT
	Ⓕ	4

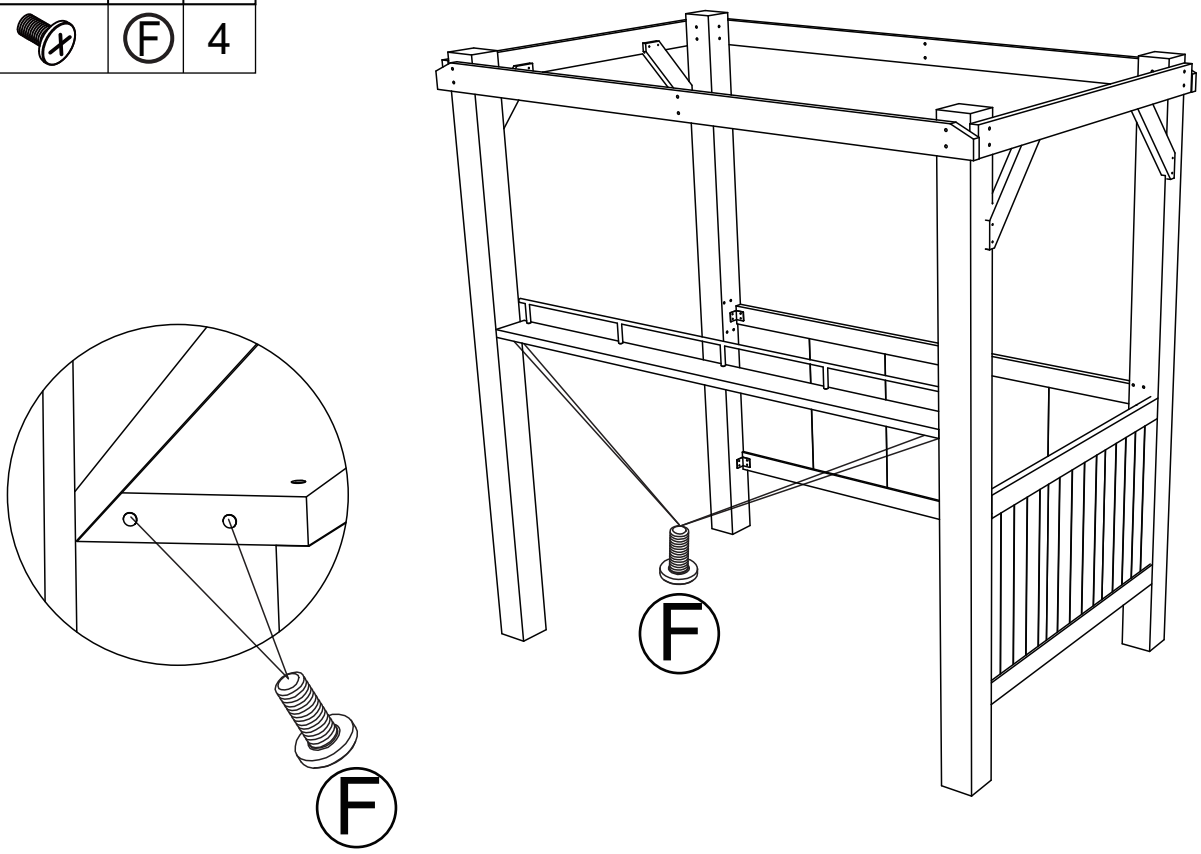

17

PART	NO	QIT
	13	2
	D	16
	E	4

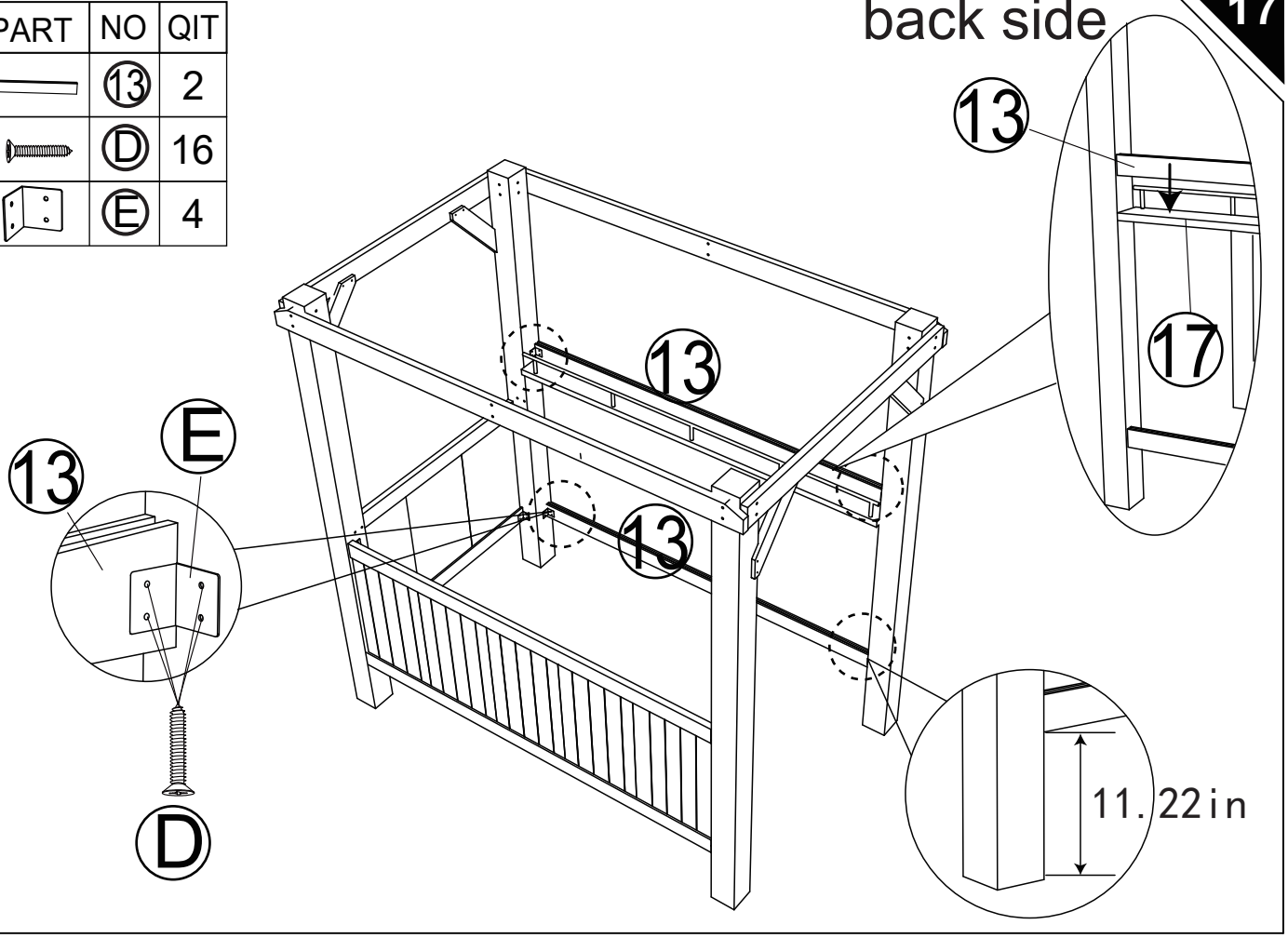

18

PART	NO	QIT
	19	2
	11	6
	20	2

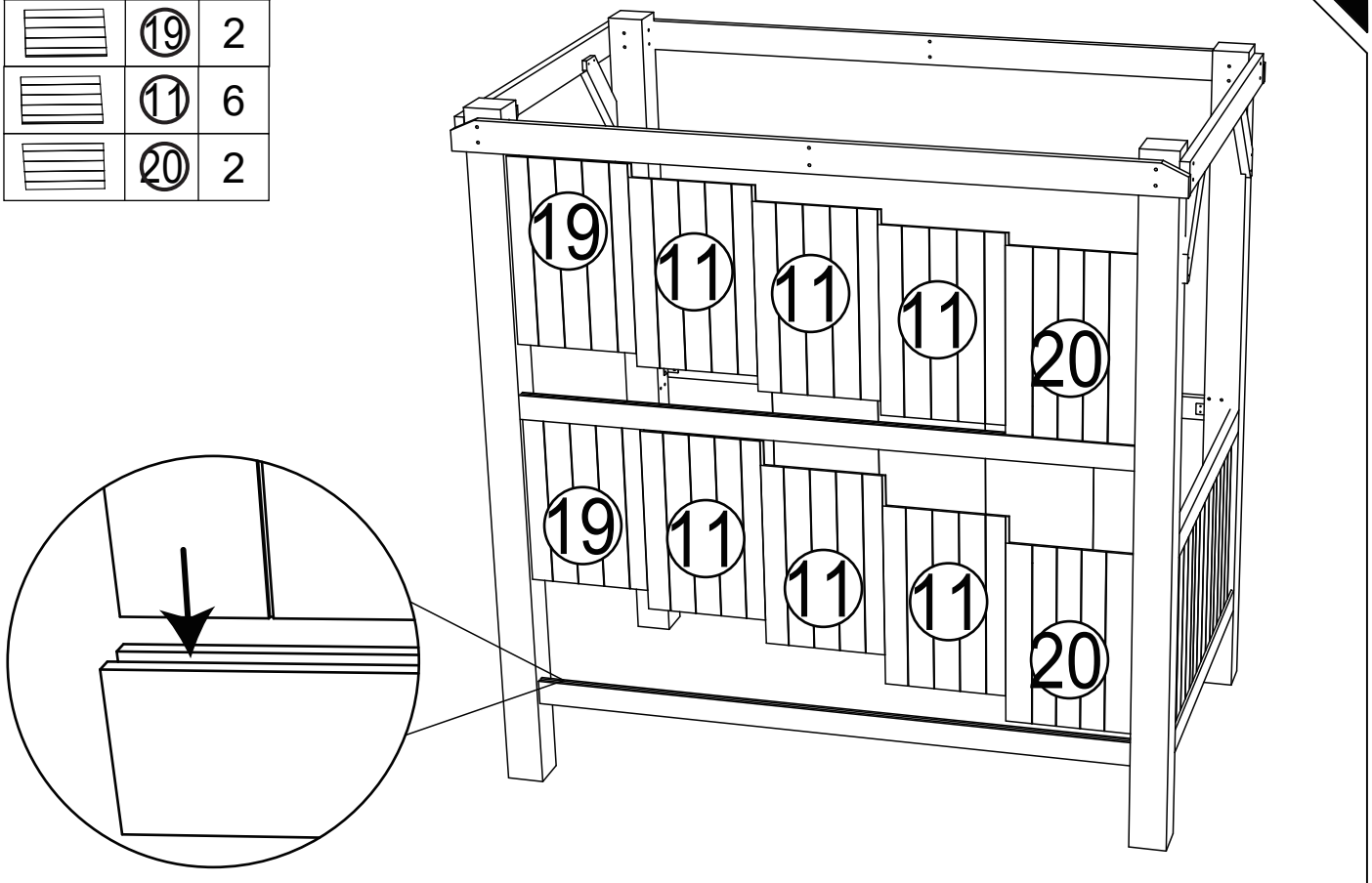

19

PART	NO	QIT
	13	2
	D	16
	E	4

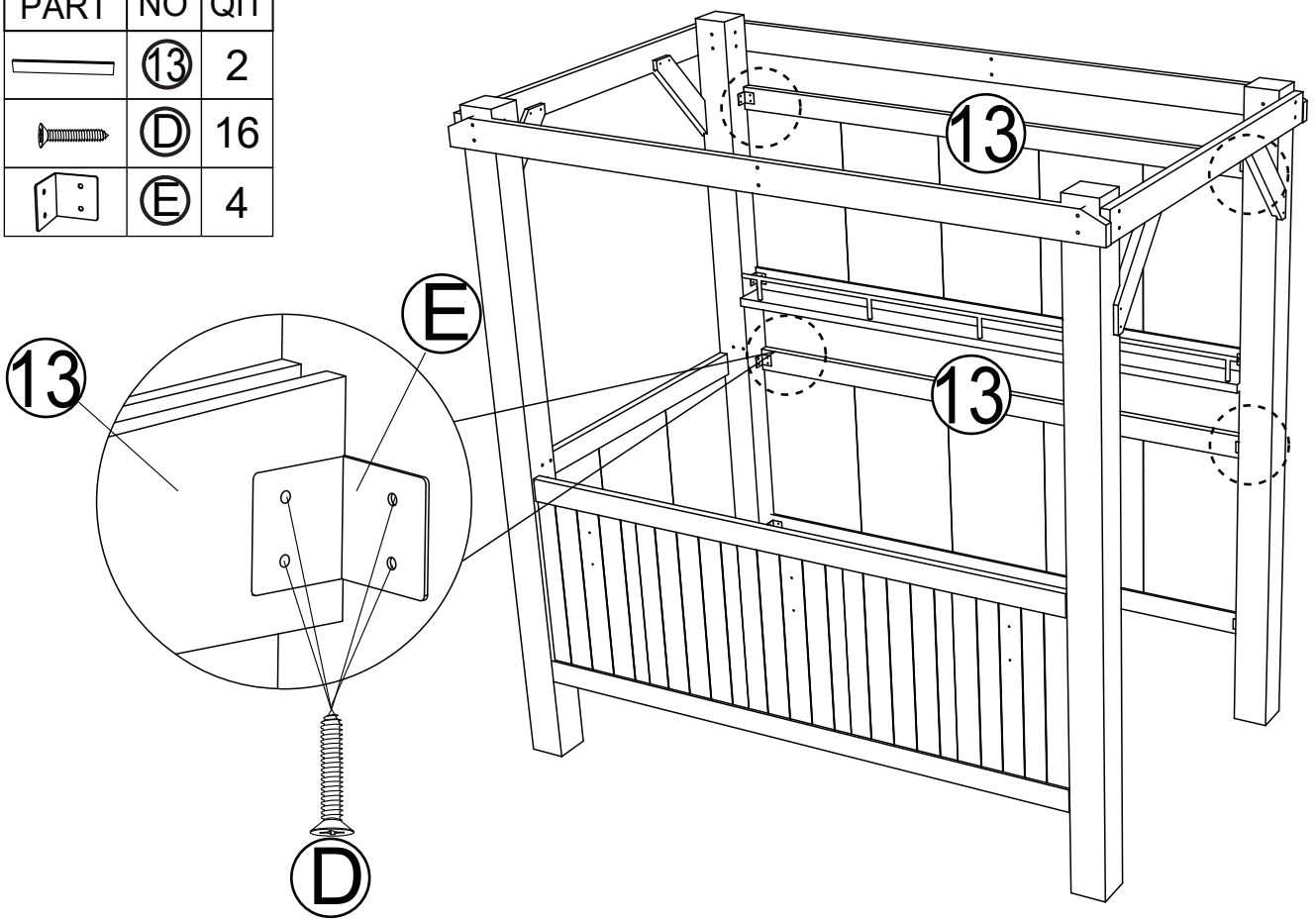

20

PART	NO	QIT
	21	5
	H	5

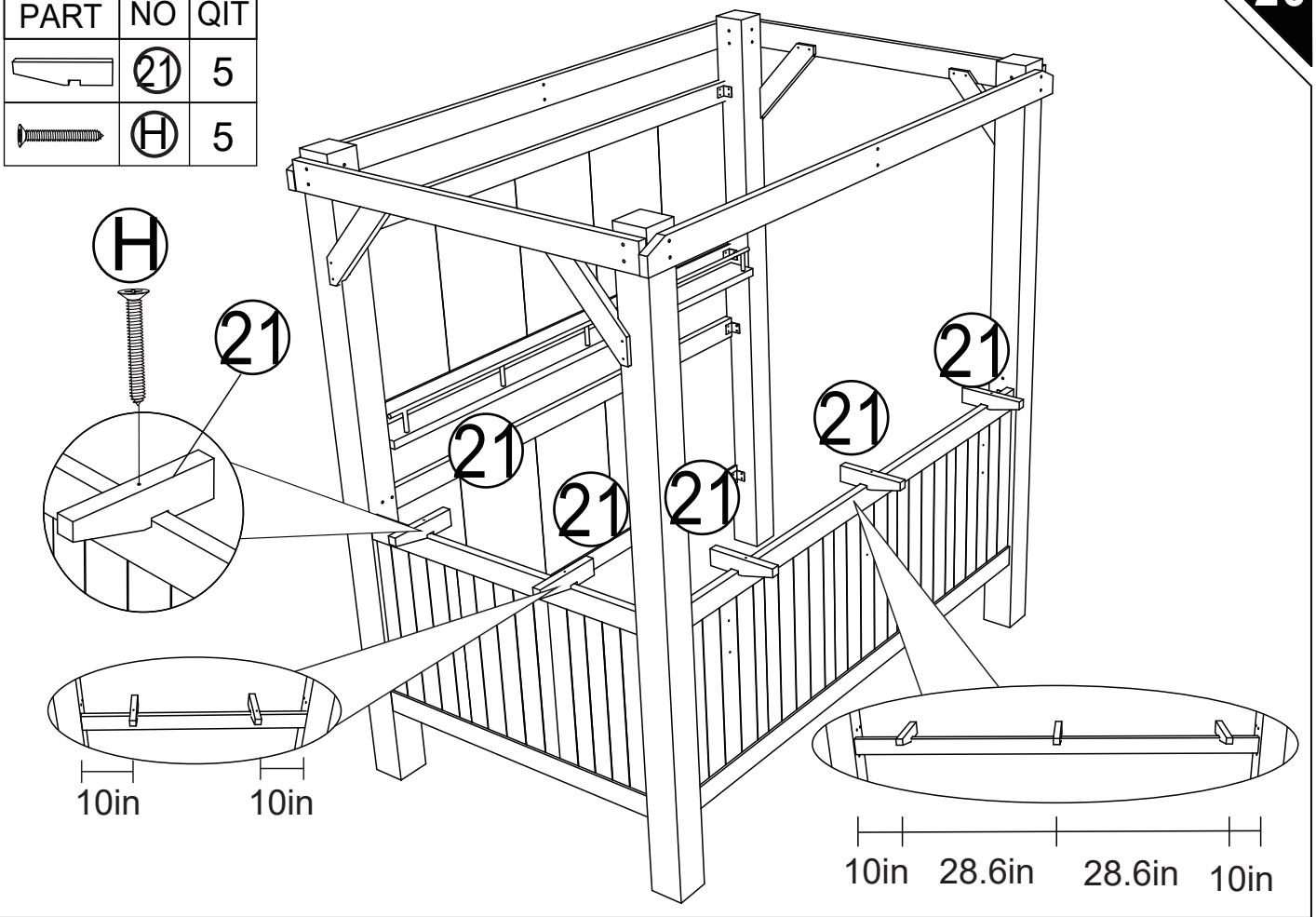

21

PART	NO	QIT
	22	1
	Ⓕ	4
	Ⓖ	4

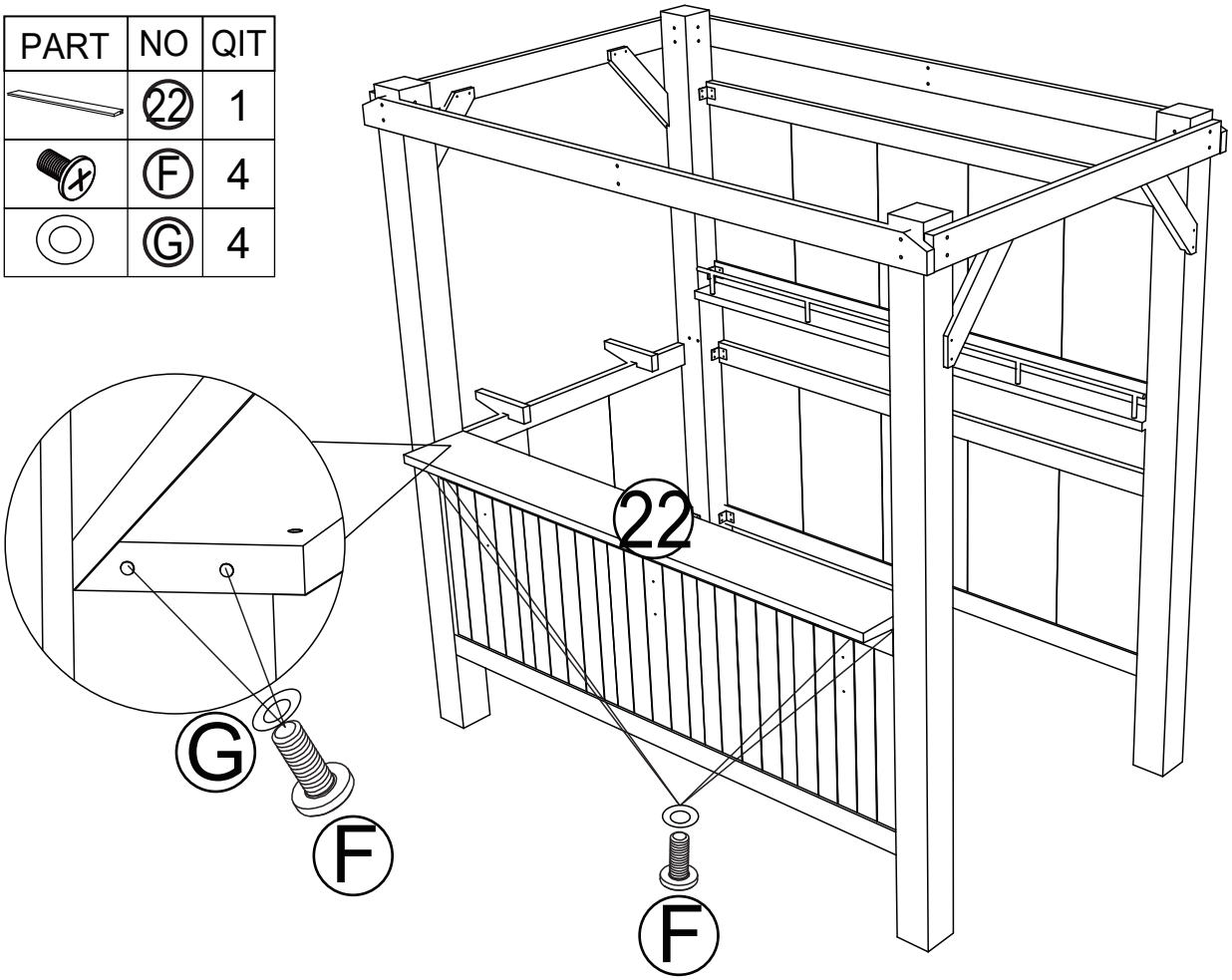

22

PART	NO	QIT
	23	1
	Ⓕ	4
	Ⓖ	4

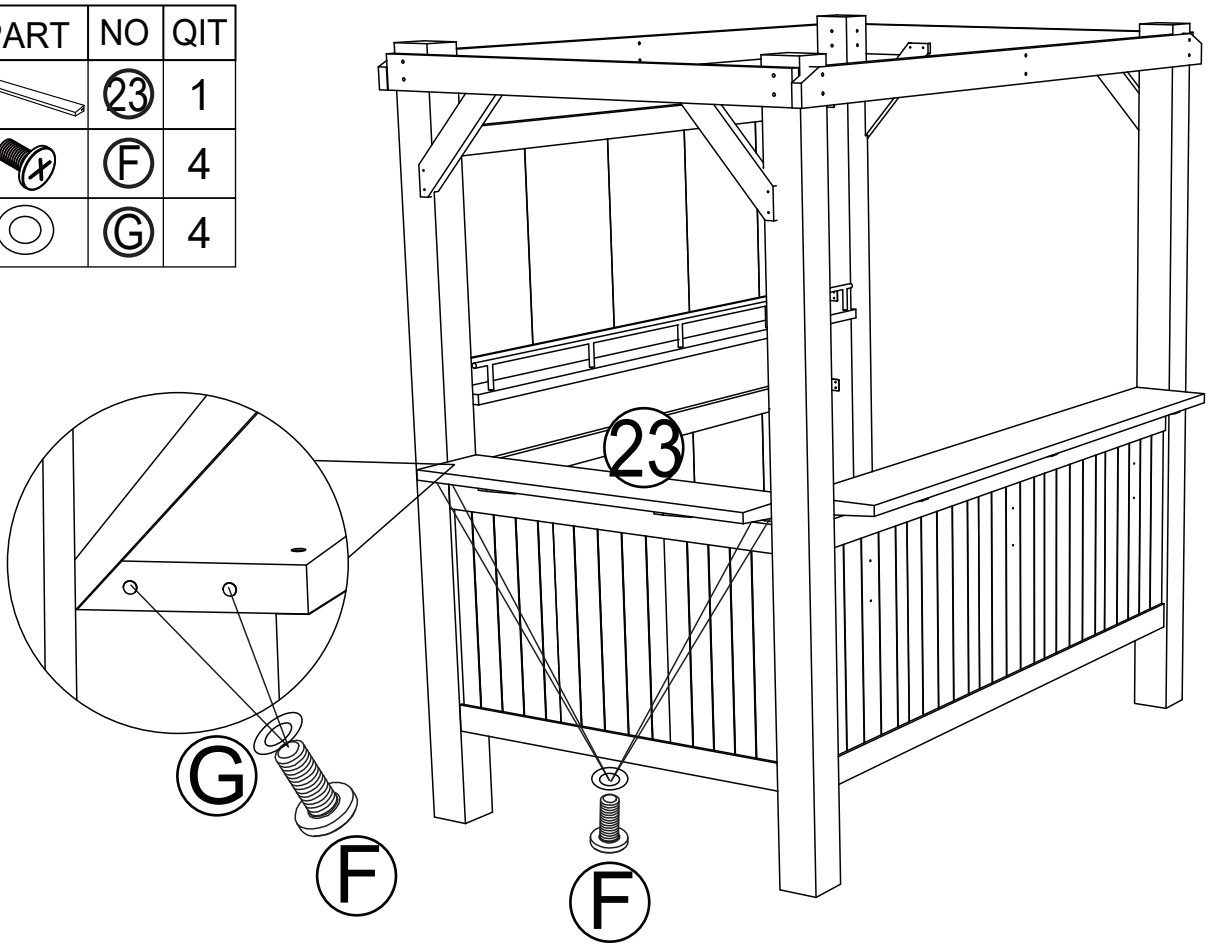

23

PART	NO	QIT
	22	1
	F	4
	G	4

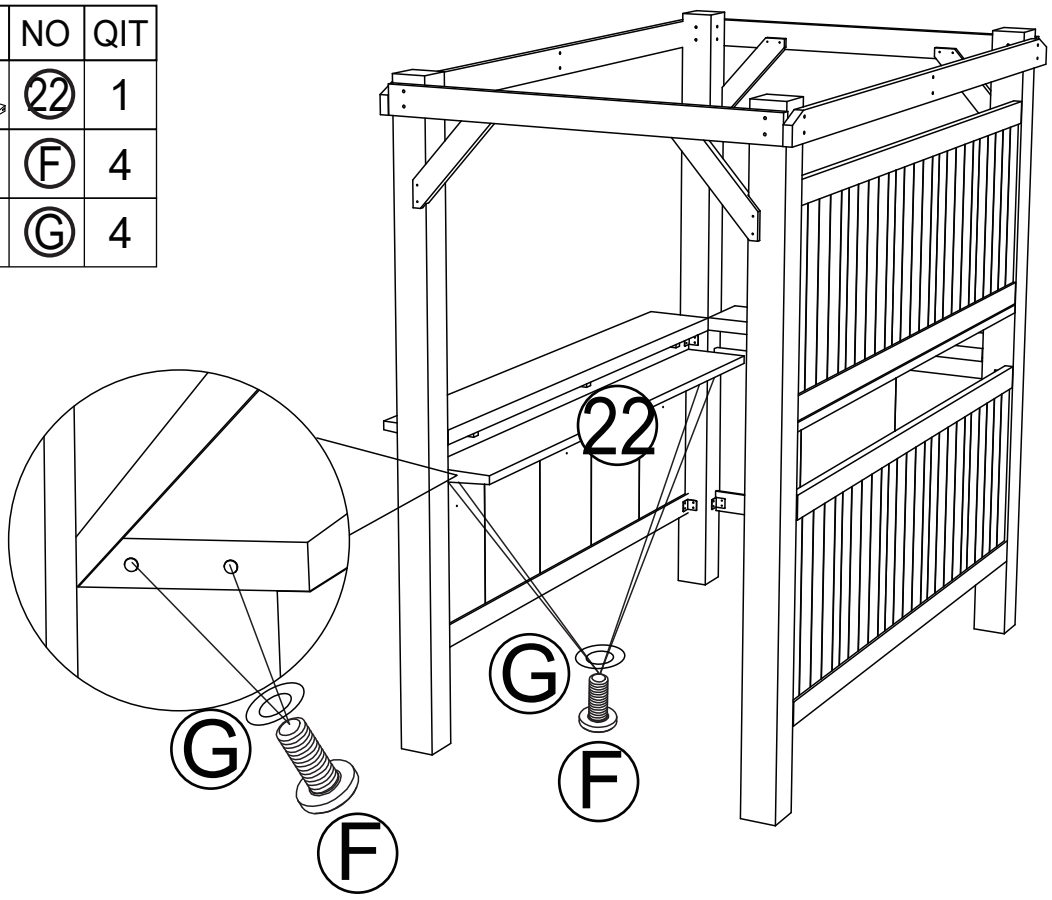

24

PART	NO	QIT
	45	3
	I	6

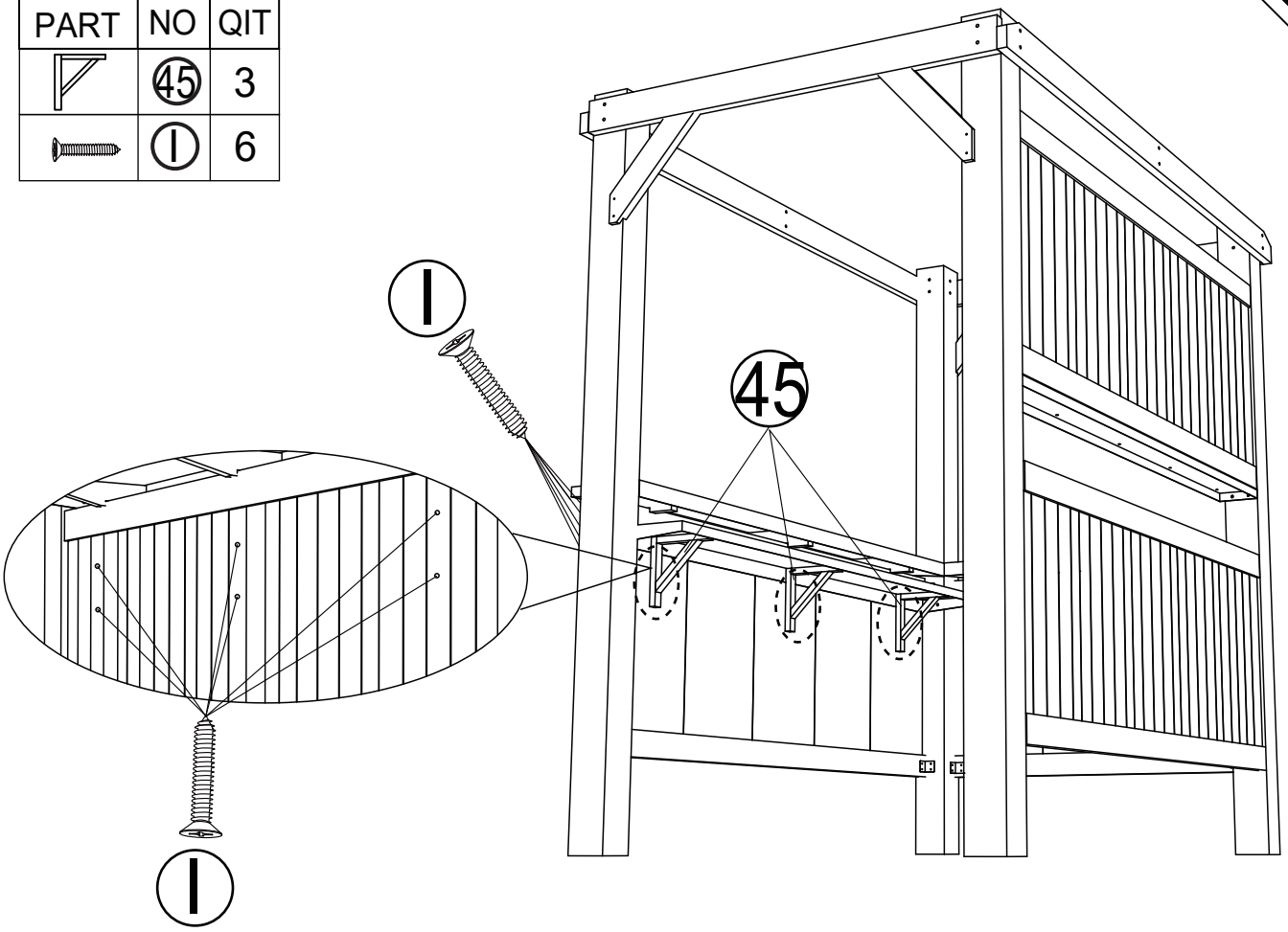

25

PART	NO	QIT
	24	1
	I	8

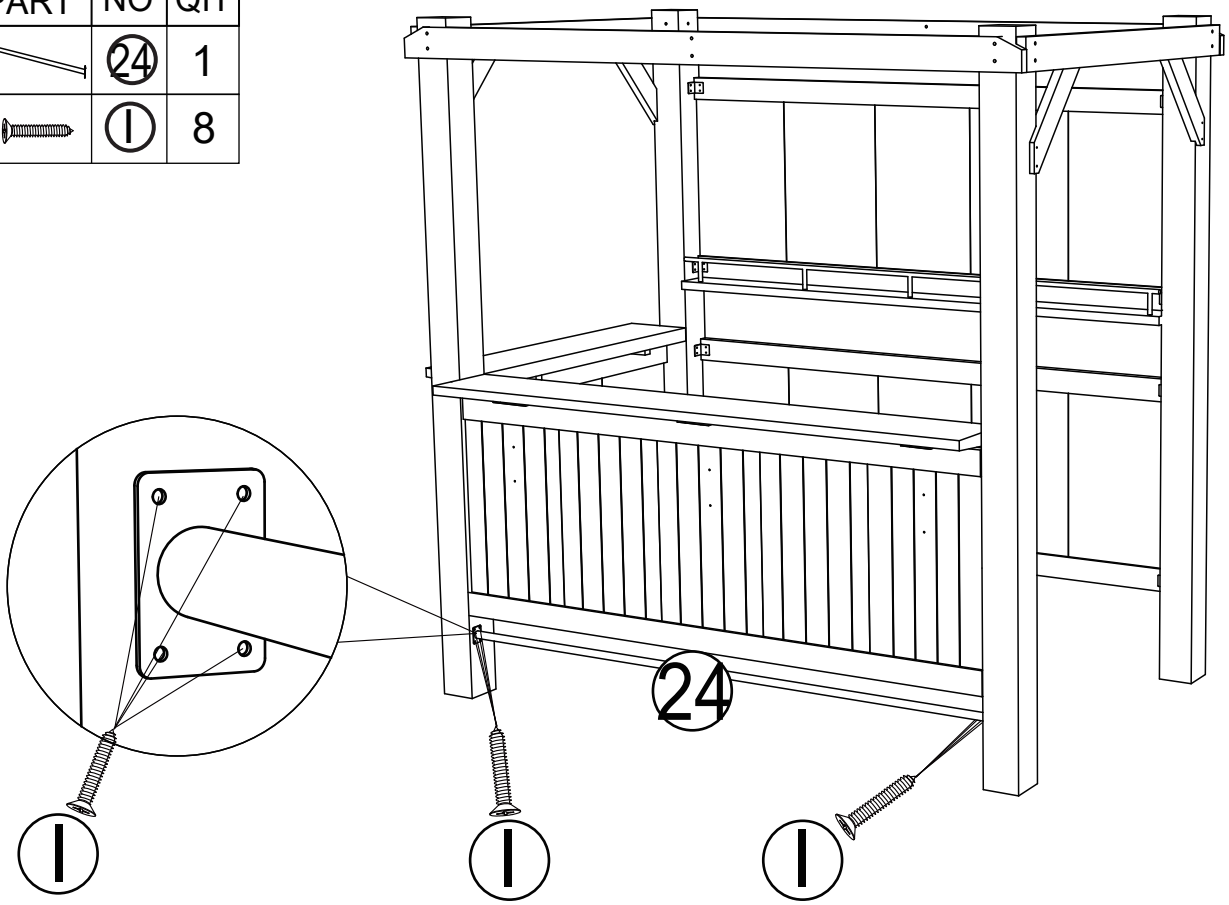

26

PART	NO	QIT
	25	1
	I	8

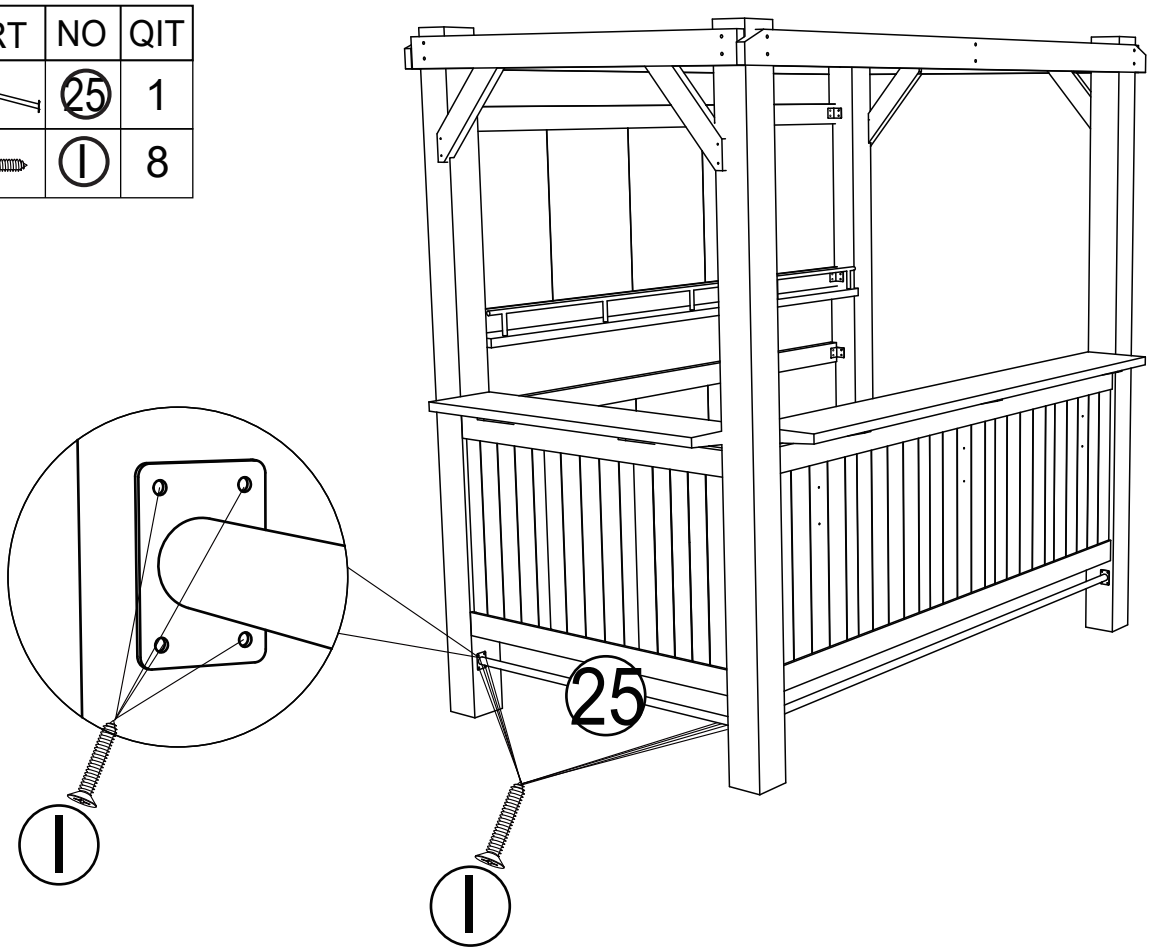

27

PART	NO	QIT
	26	2
	J	4

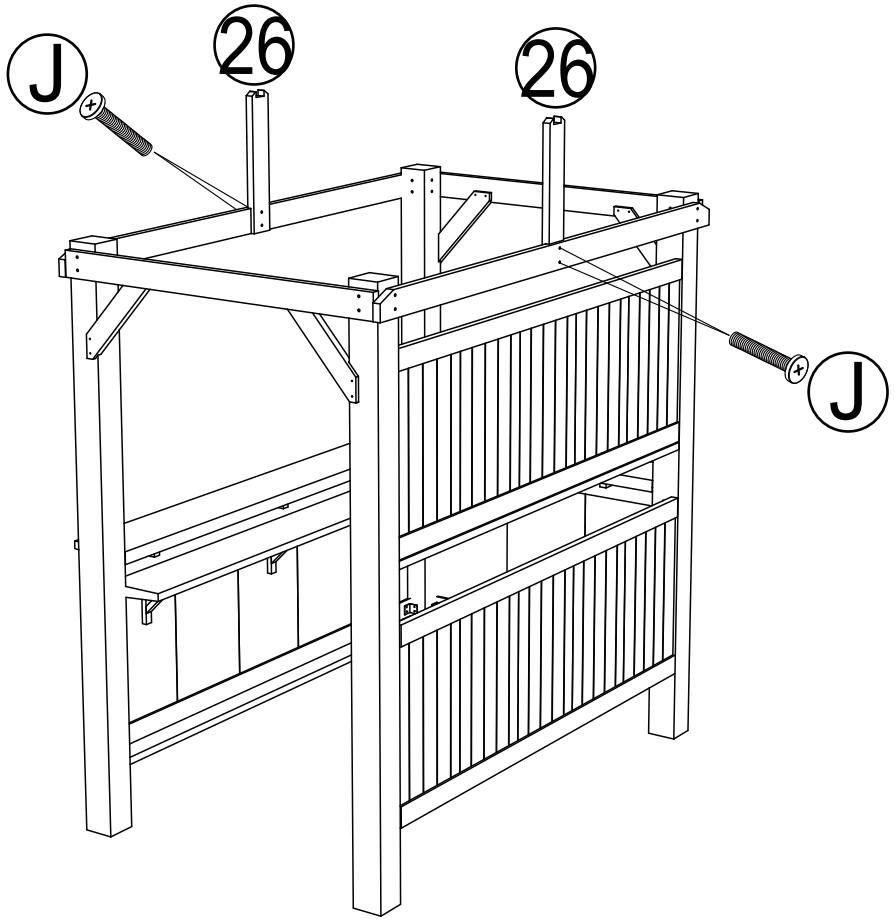

28

PART	NO	QIT
	27	2
	28	2
	C	8

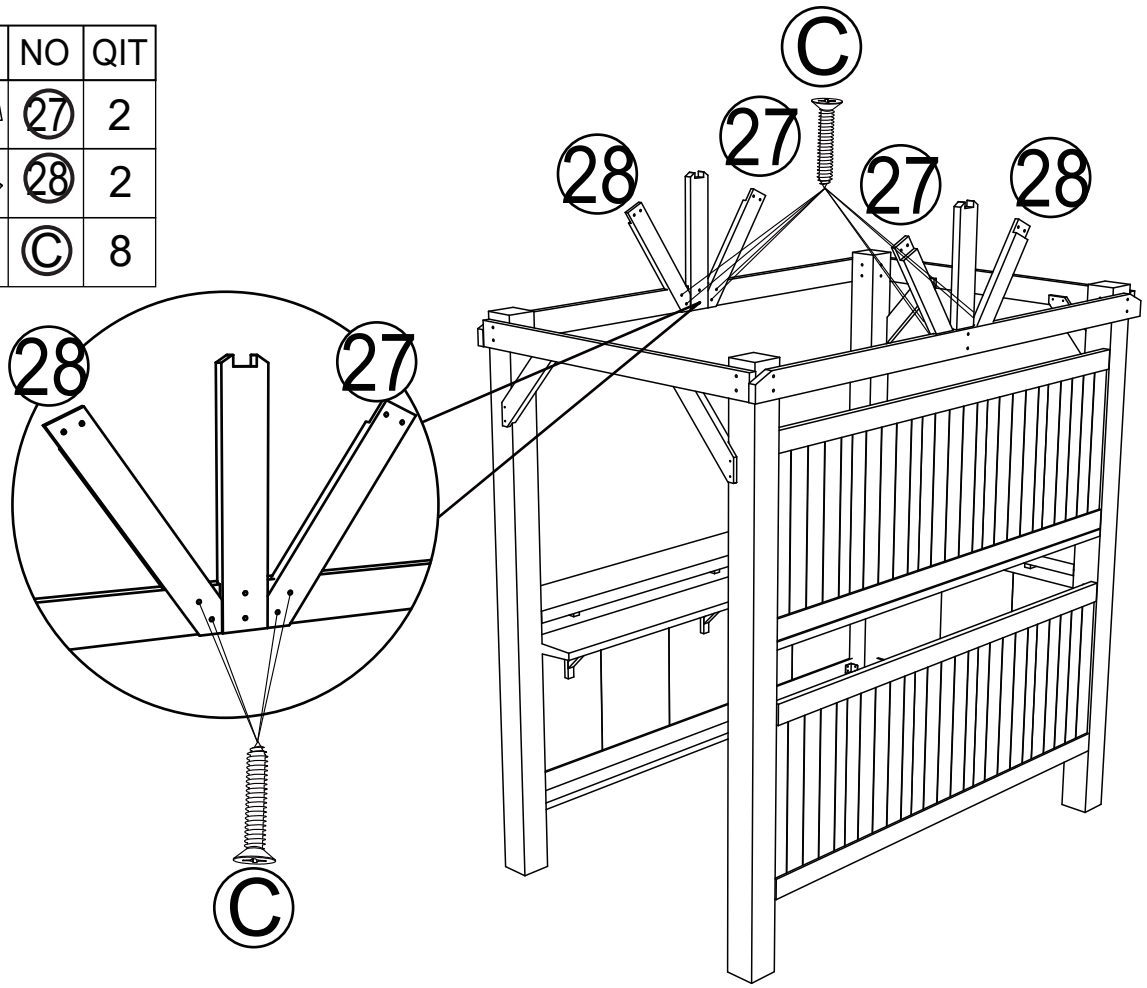

29

PART	NO	QIT
	29	1
	30	2
	31	2
	32	1
	H	10

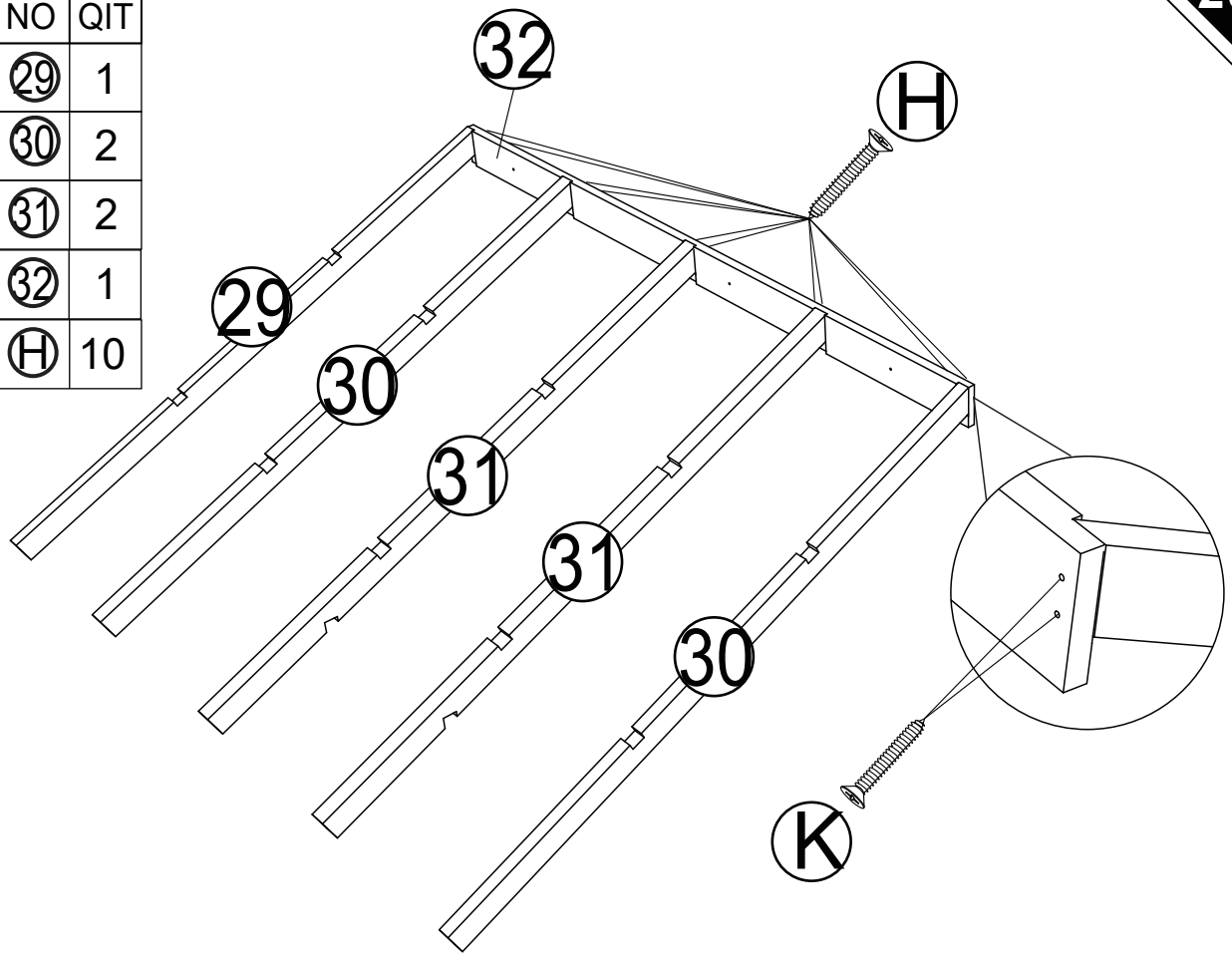

30

PART	NO	QIT
	33	1
	C	5

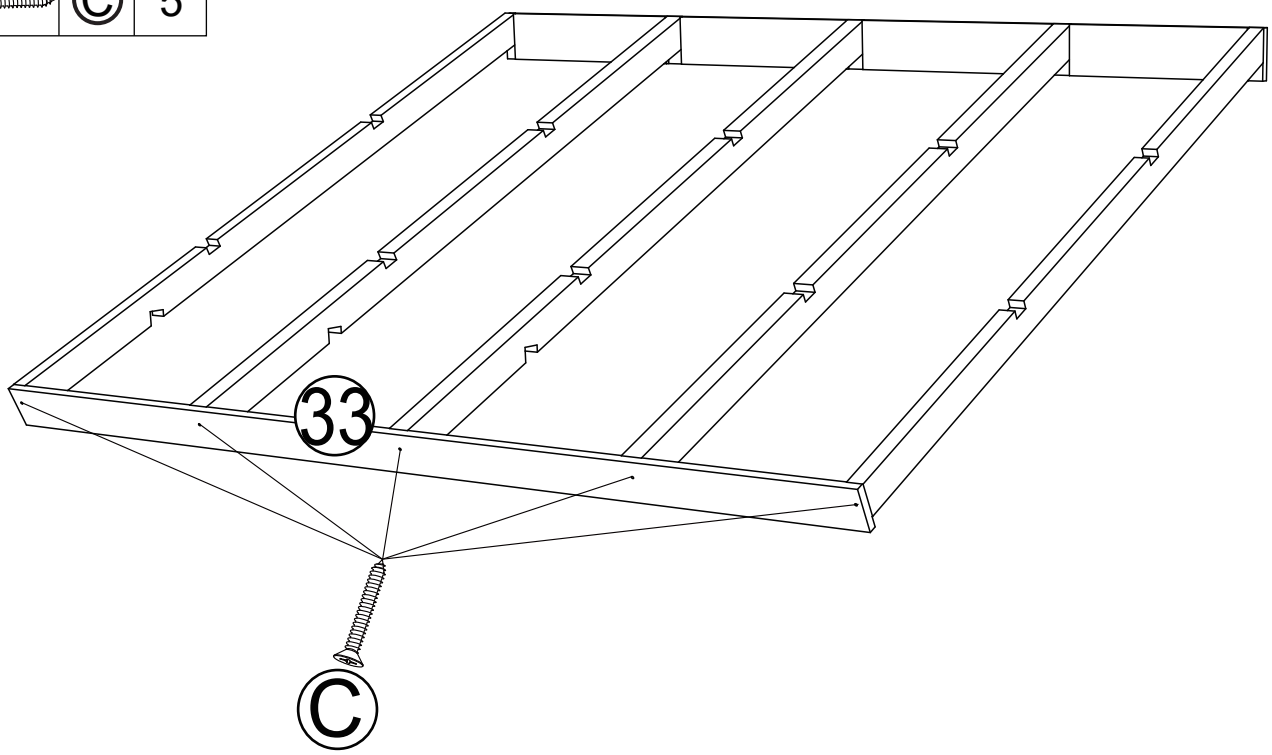

31

PART	NO	QIT
	34	2
	K	10

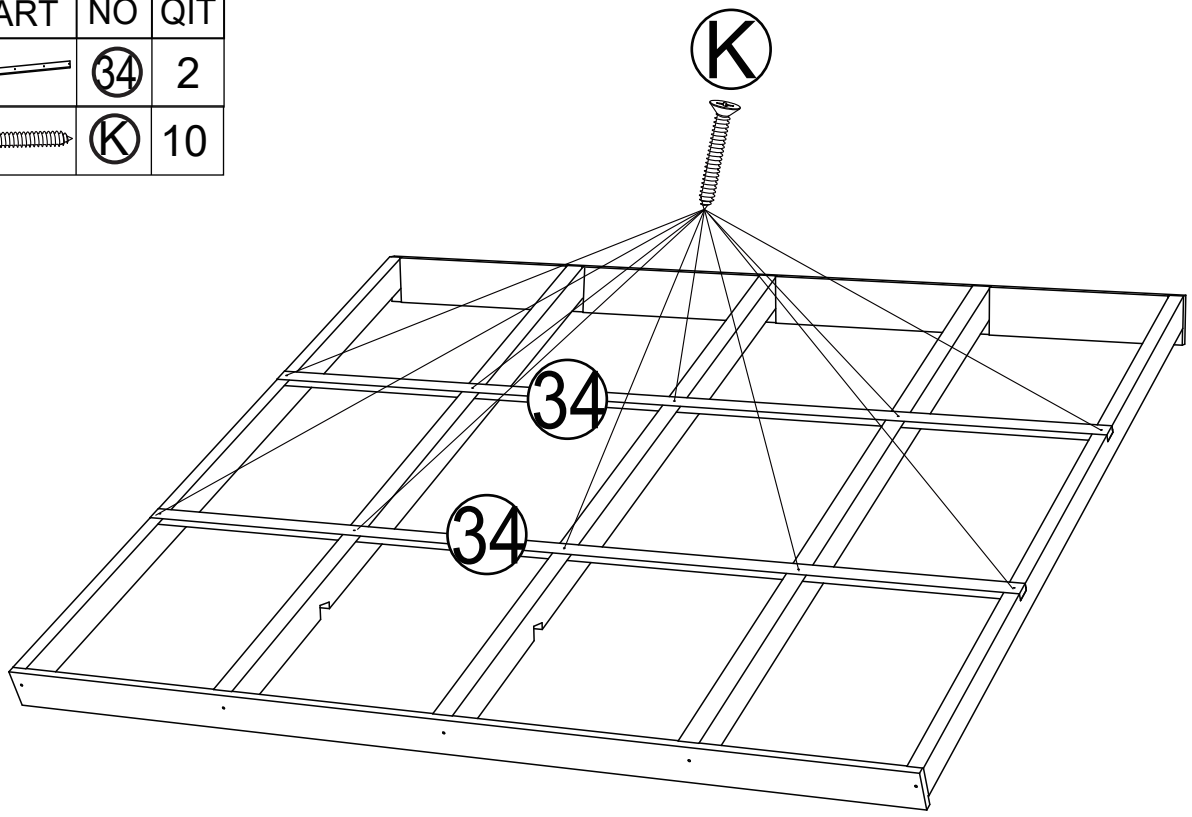

32

PART	NO	QIT
	29	1
	30	2
	31	2
	35	1
	H	10

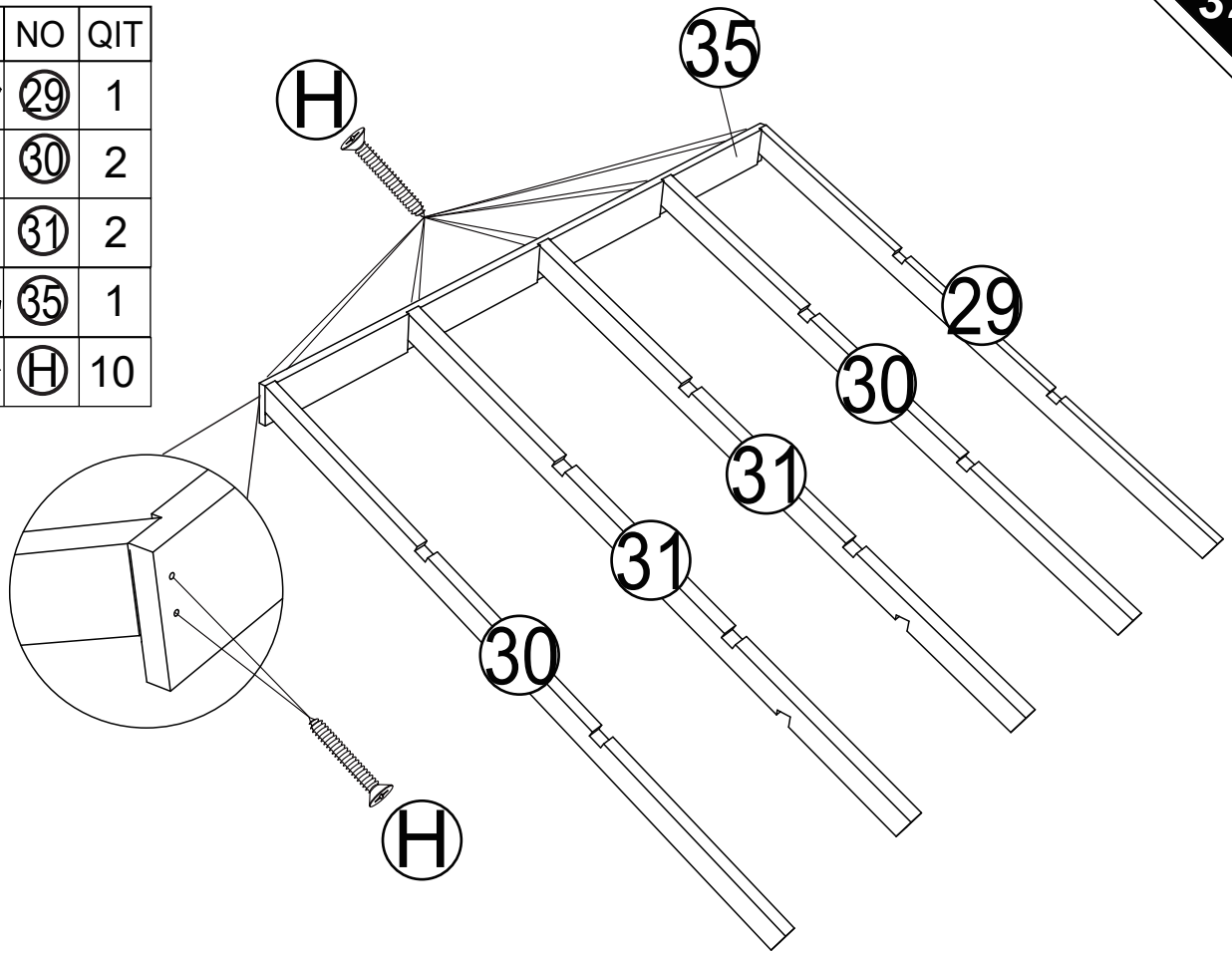

33

PART	NO	QIT
	33	1
	C	5

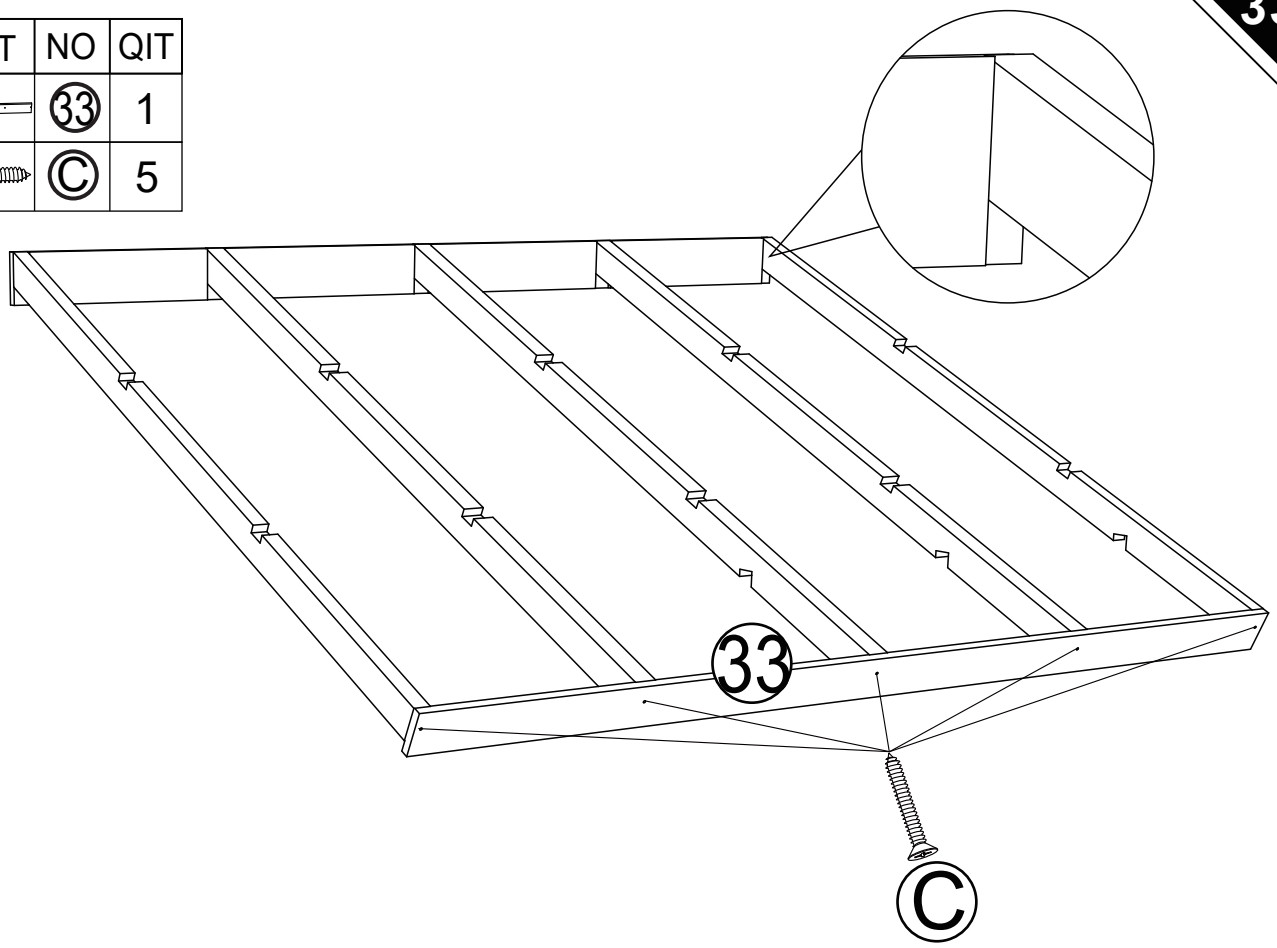

34

PART	NO	QIT
	34	2
	K	10

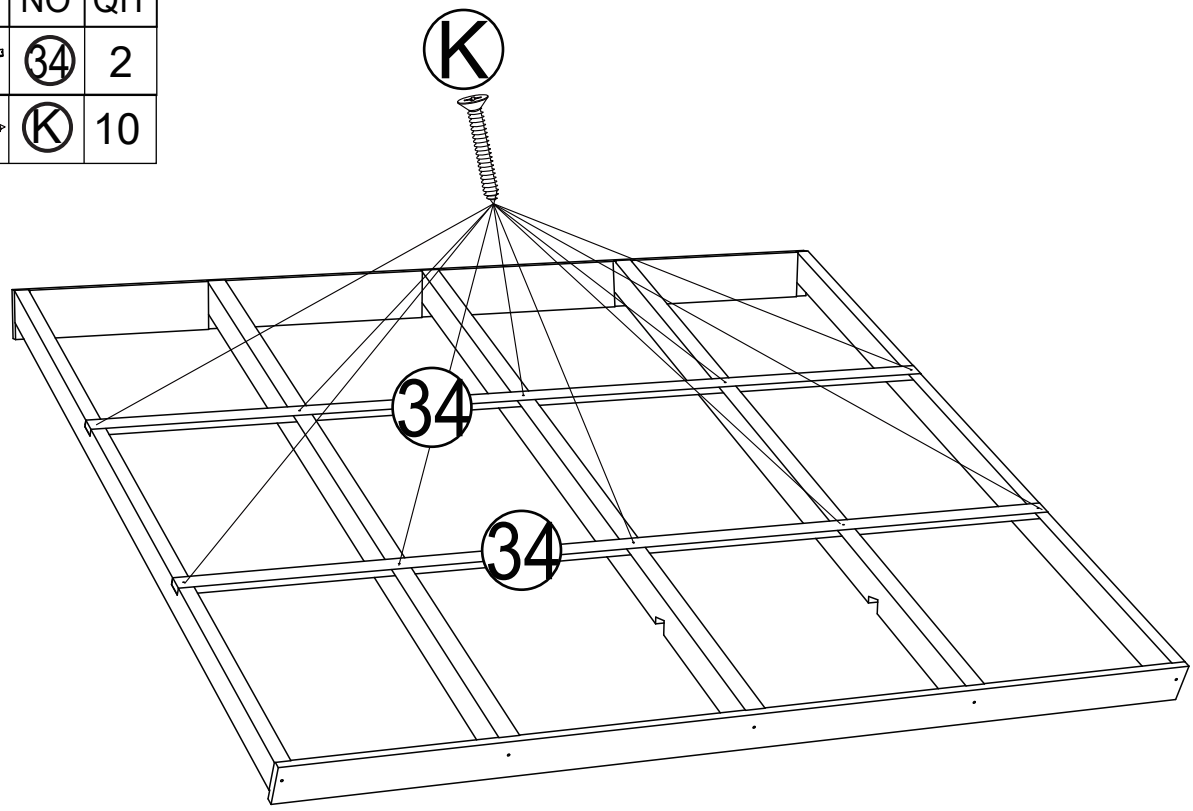

35

PART	NO	QIT
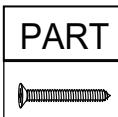	©	4

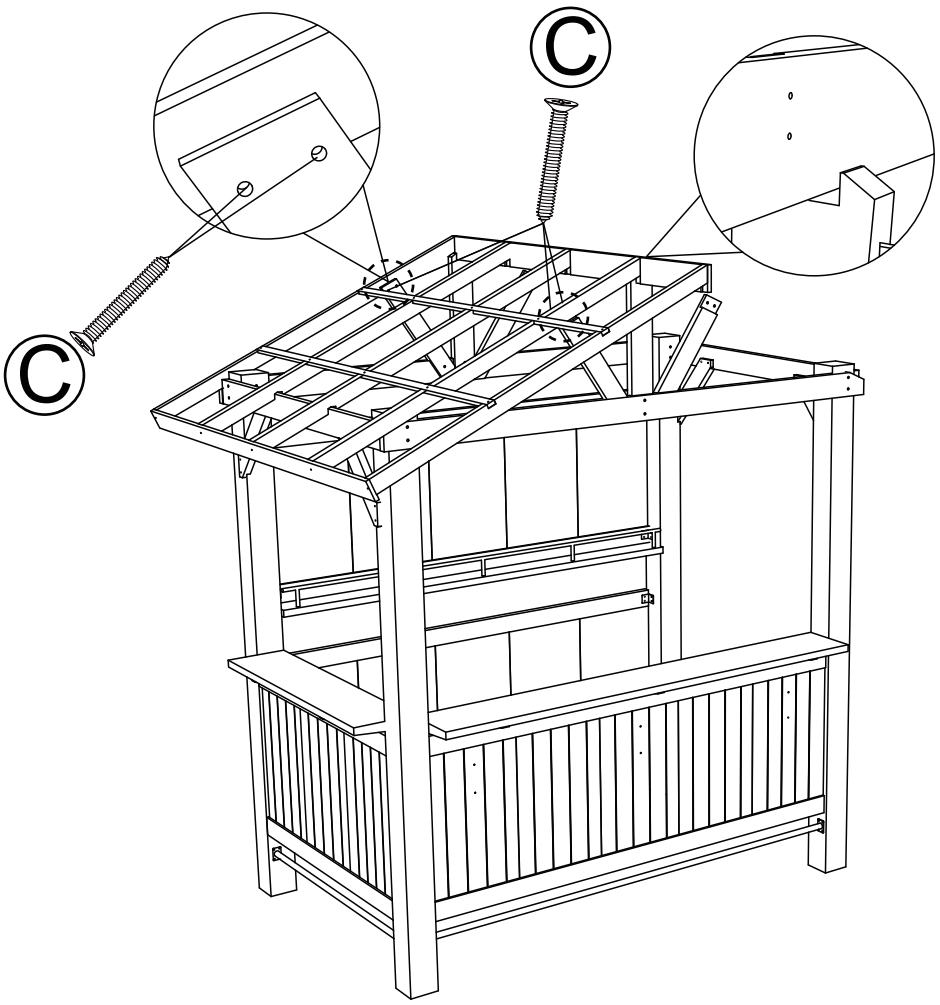

36

PART	NO	QIT
	Ⓗ	2

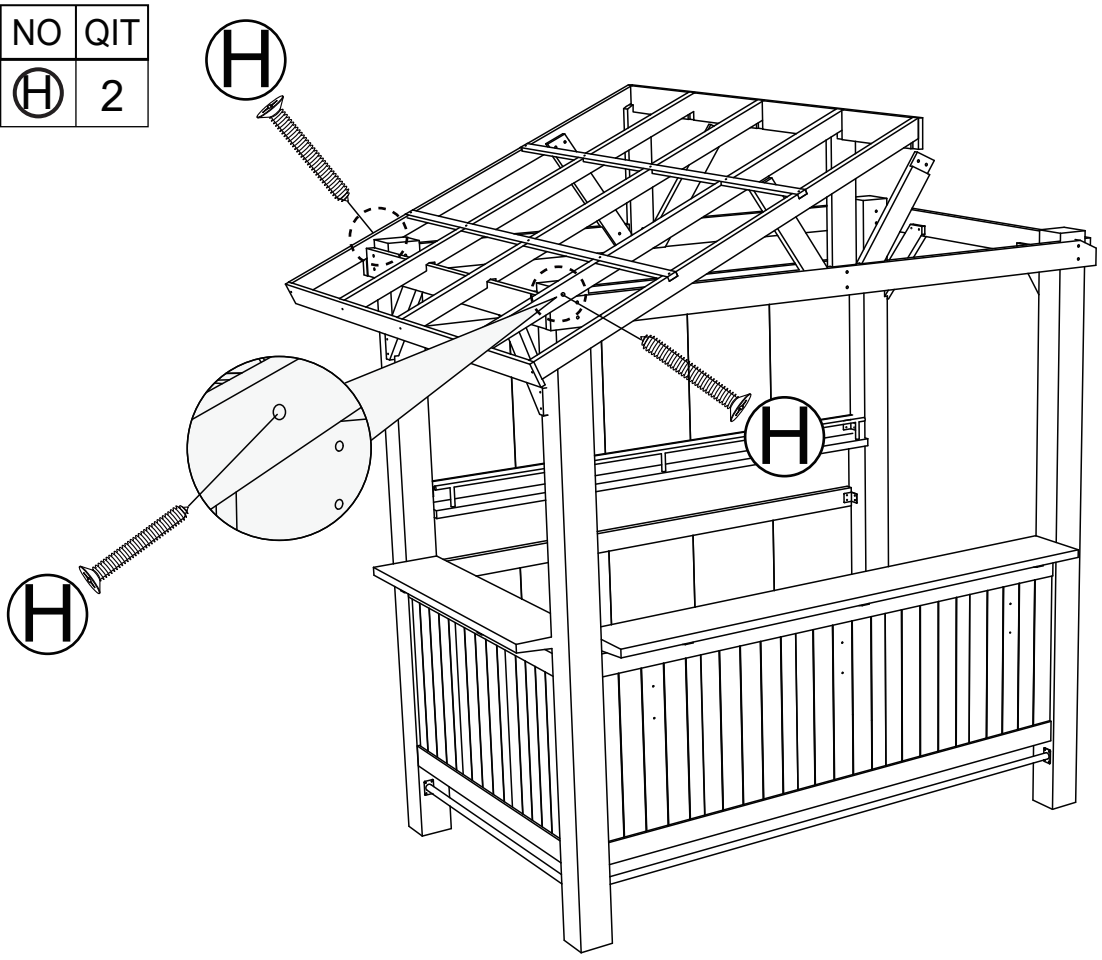

37

PART	NO	QIT
	©	4

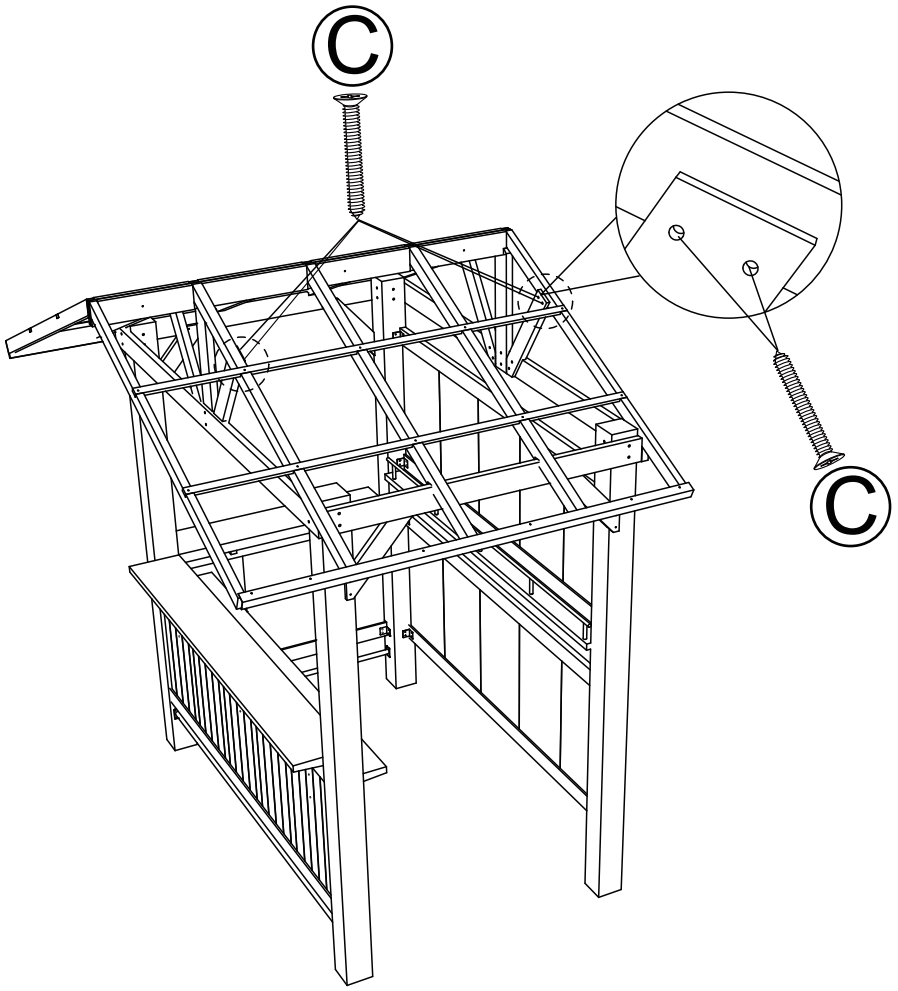

38

PART	NO	QIT
	Ⓗ	3

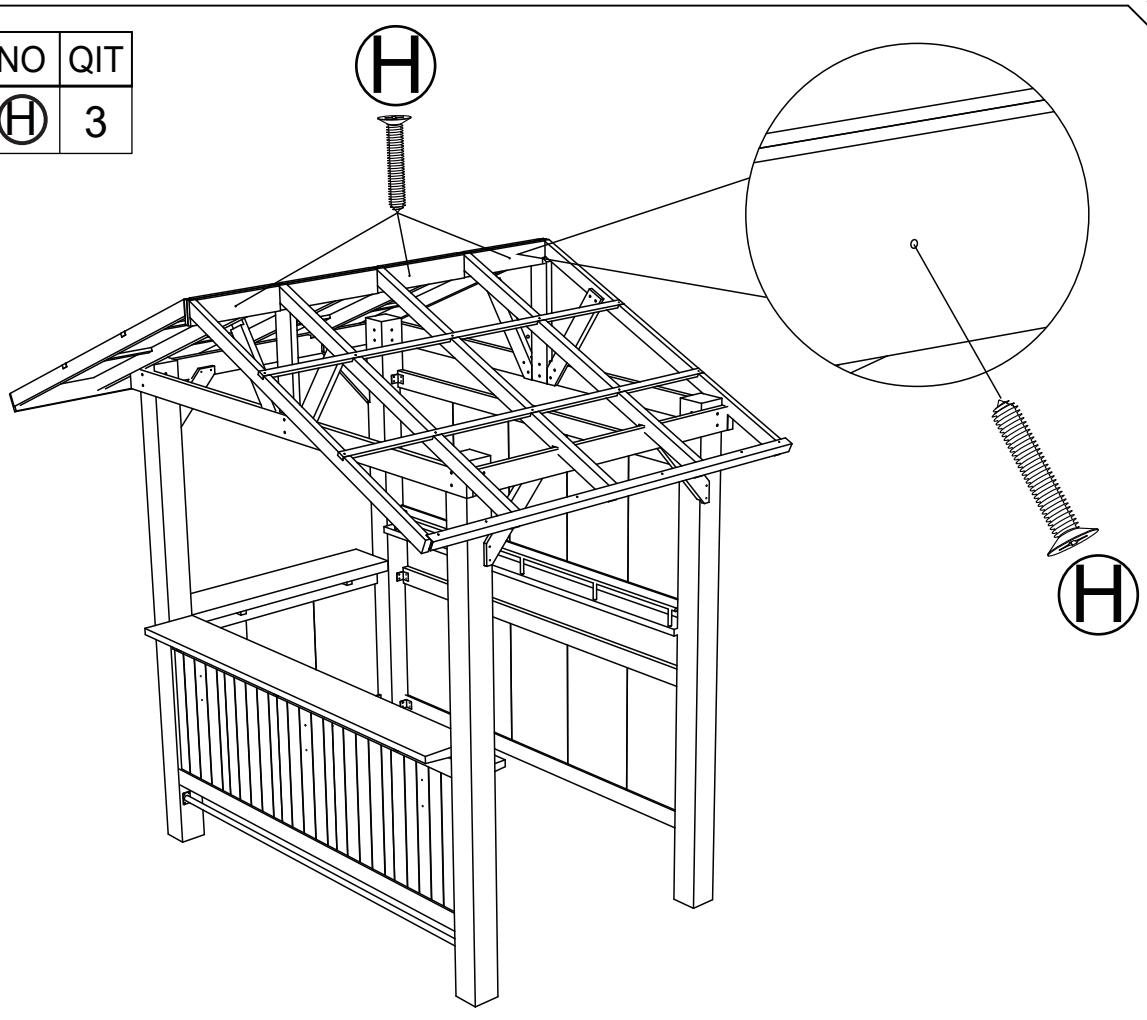

39

PART	NO	QIT
	Ⓗ	2

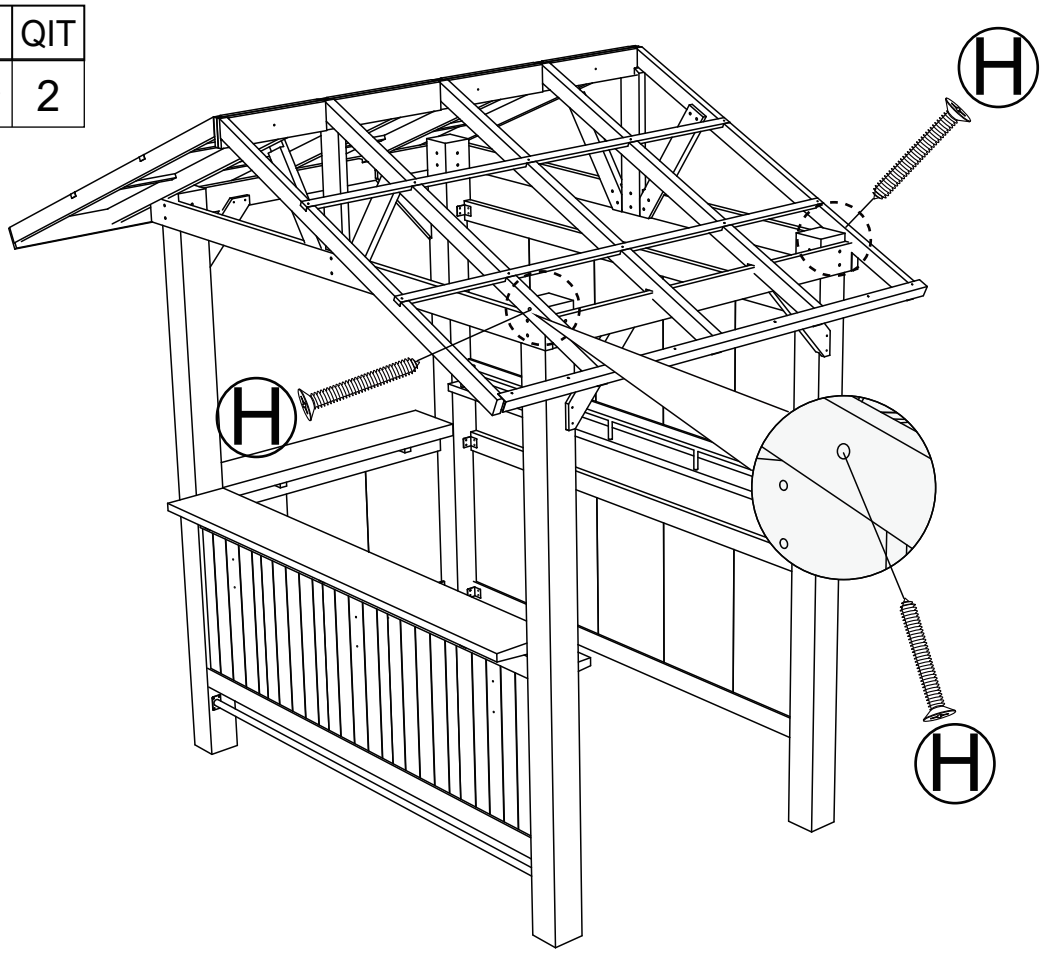

40

PART	NO	QIT
	㊱	1
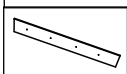	㊲	1
	Ⓚ	8

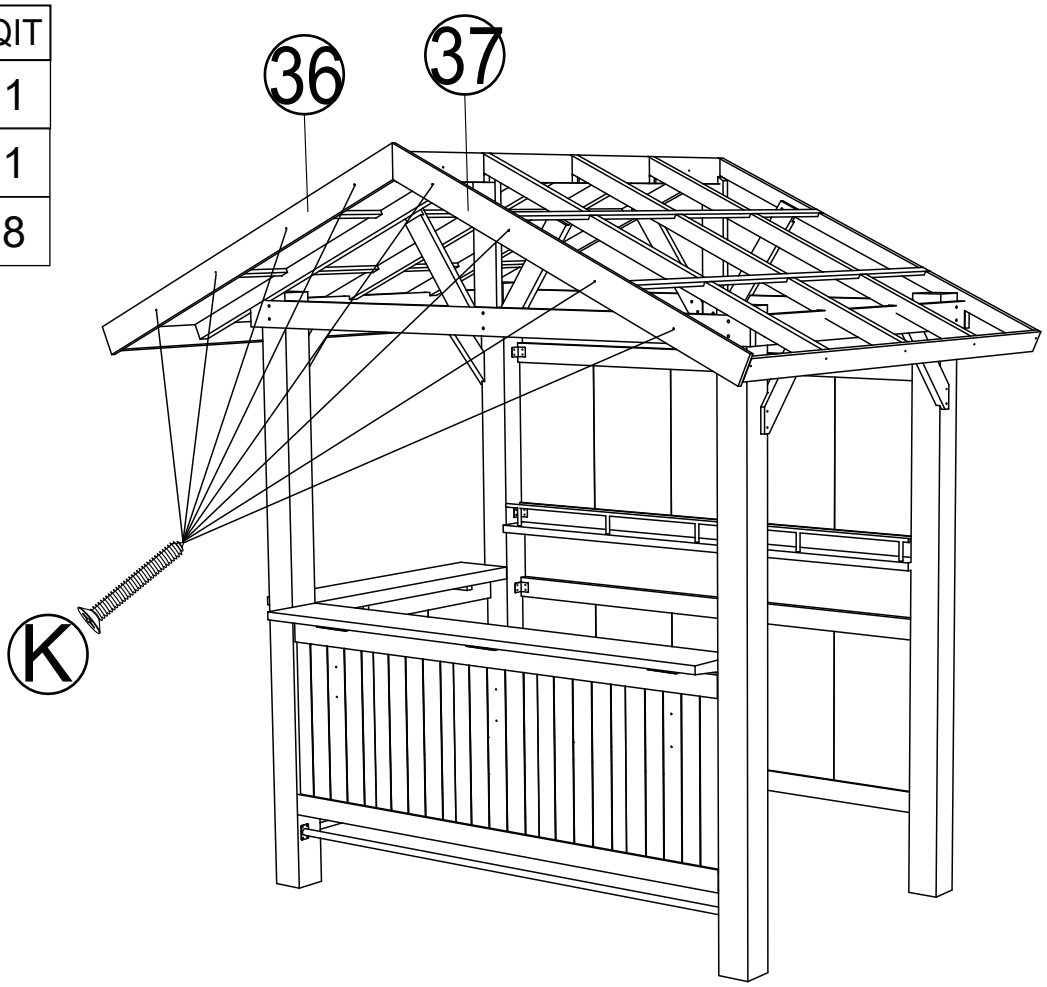

41

PART	NO	QIT
	36	1
	37	1
	K	8

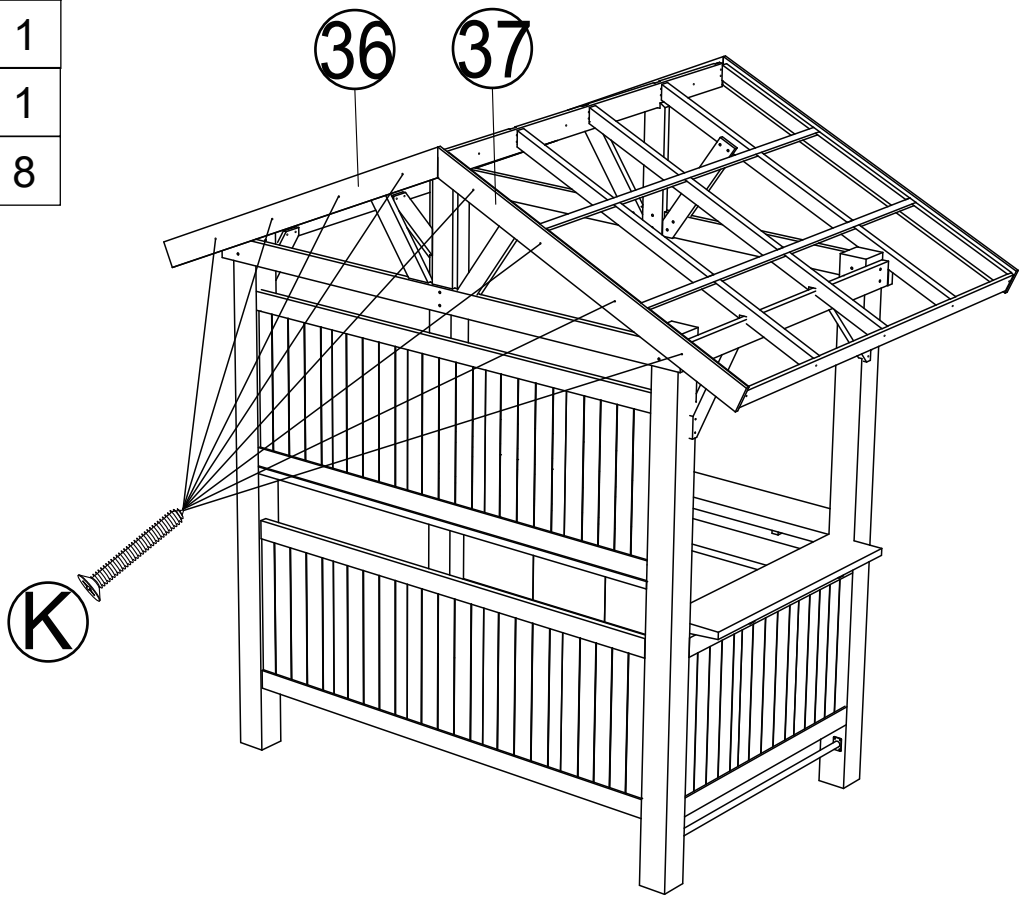

42

PART	NO	QIT
	38	2
	I	8
	M	8
	L	16

Power drill recommended

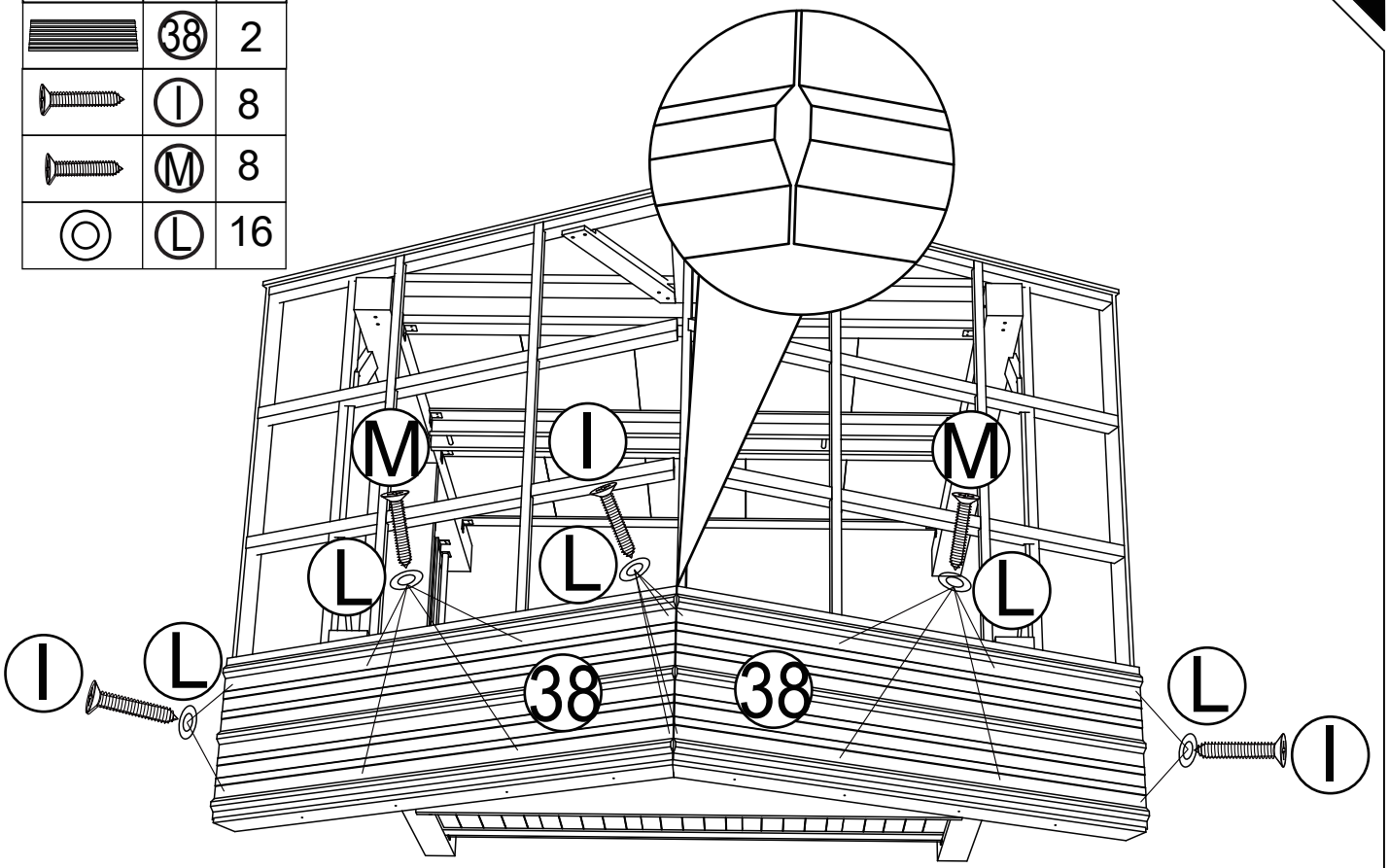

43

PART	NO	QIT
	39	2
	I	8
	M	8
	L	16

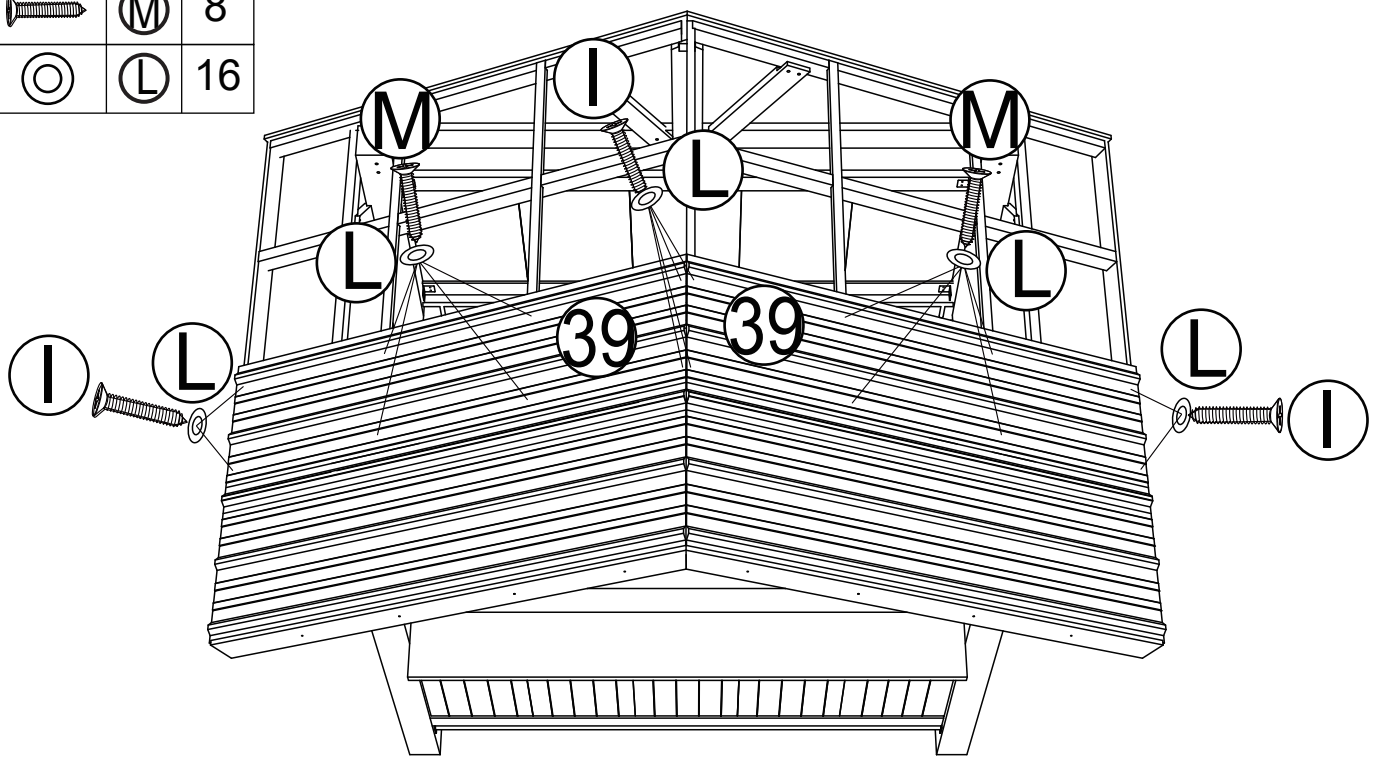

44

PART	NO	QIT
	39	2
	I	8
	M	8
	L	16

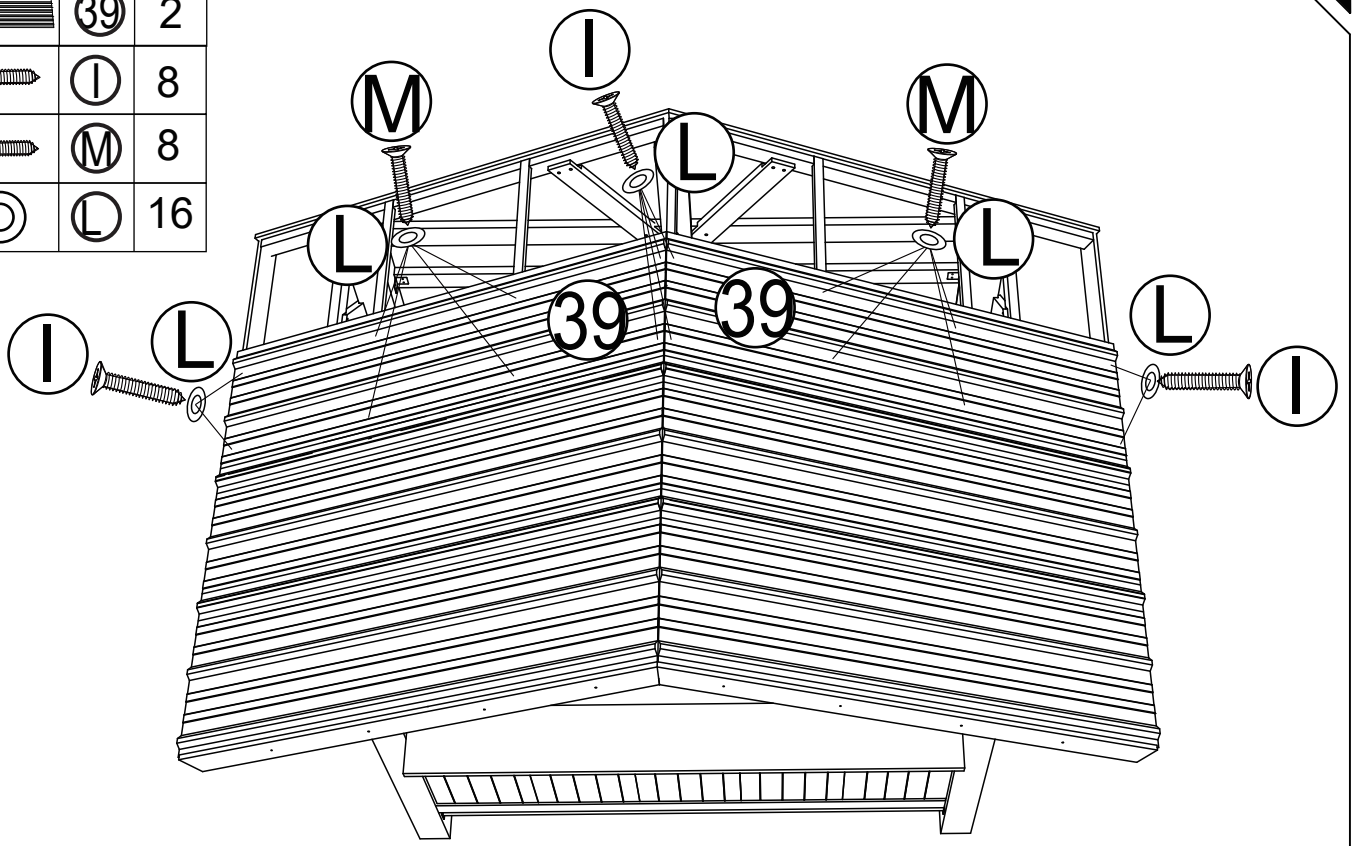

45

PART	NO	QIT
	38	2
	I	8
	M	8
	L	16

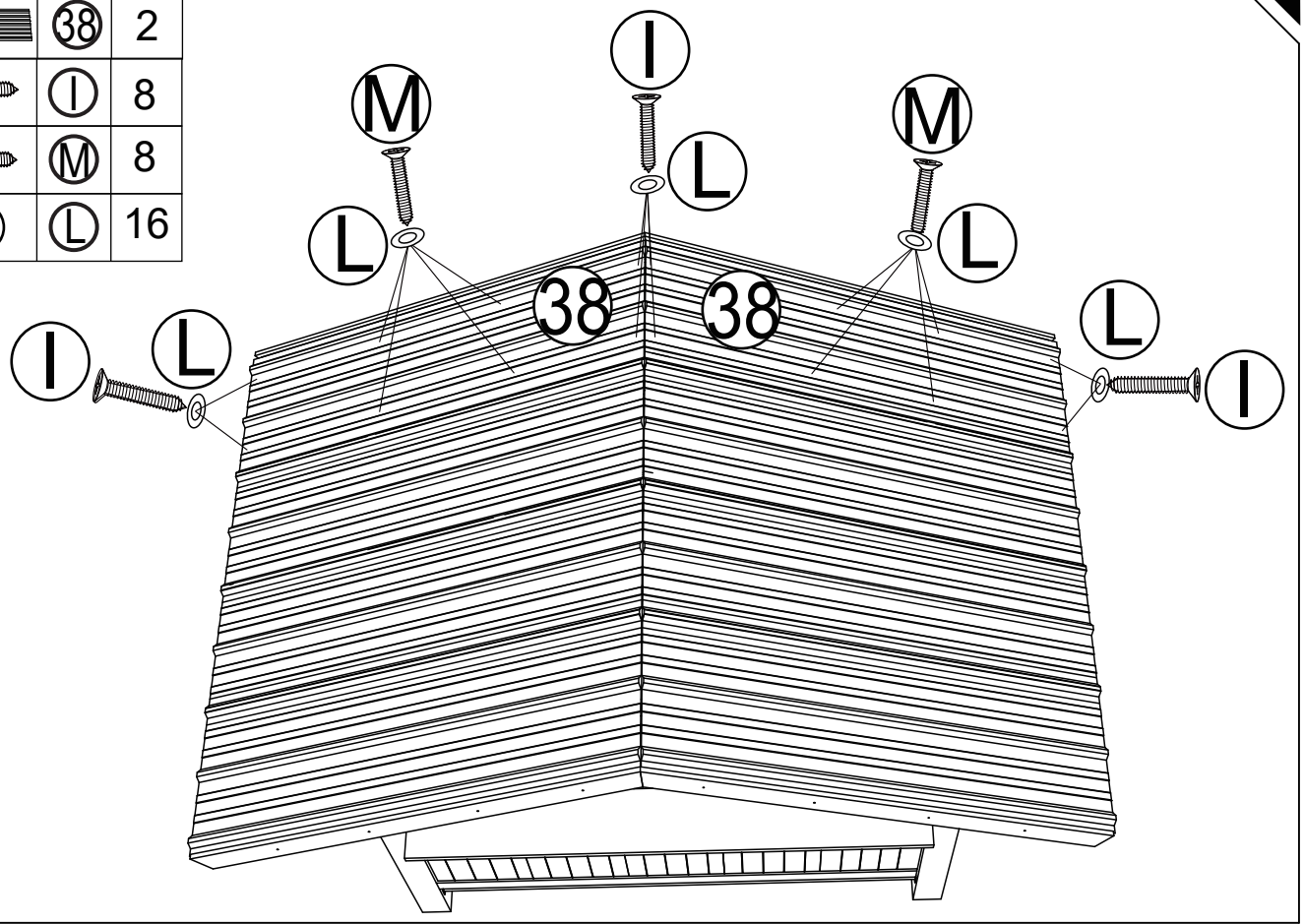

46

PART	NO	QIT
	40	1
	I	4
	L	4

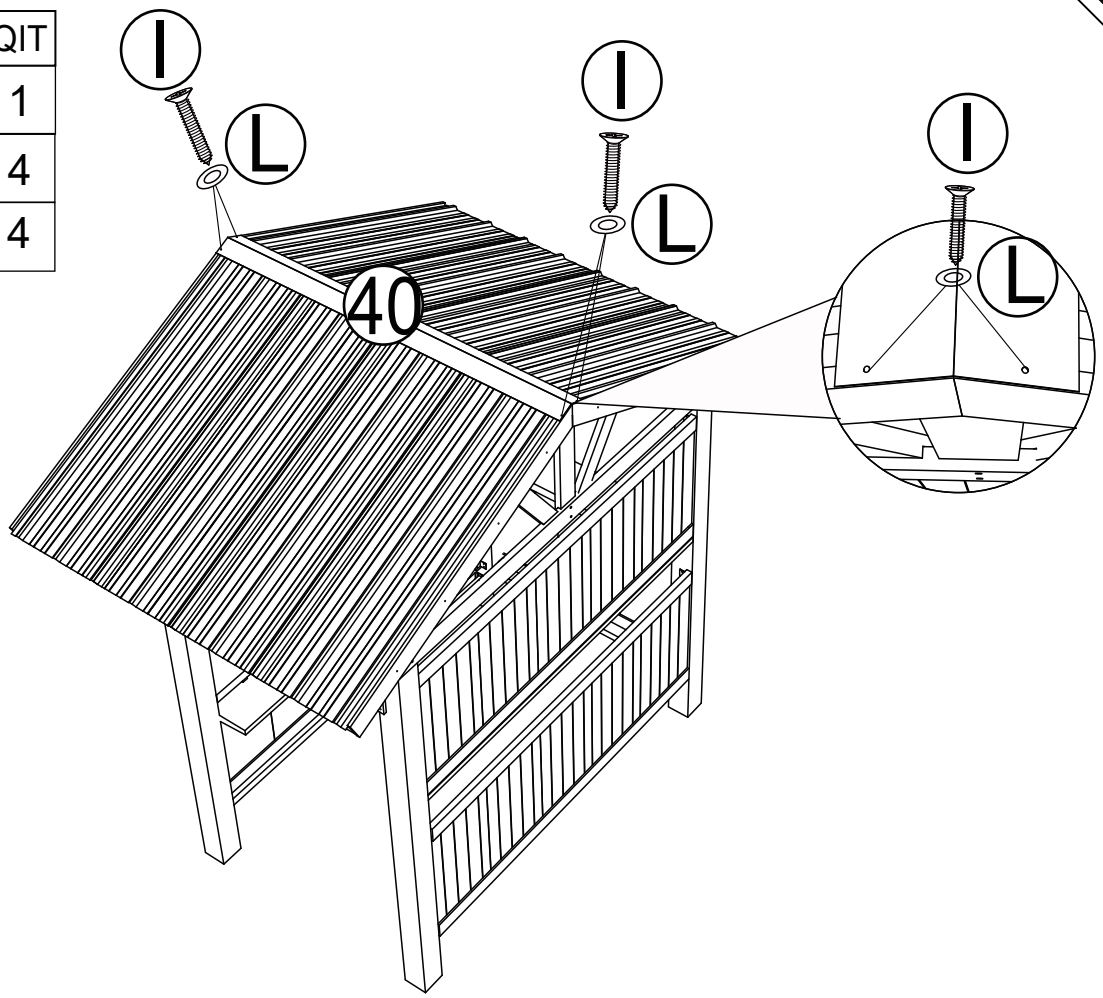

47

PART	NO	QIT
	㊶	1
	Ⓓ	8

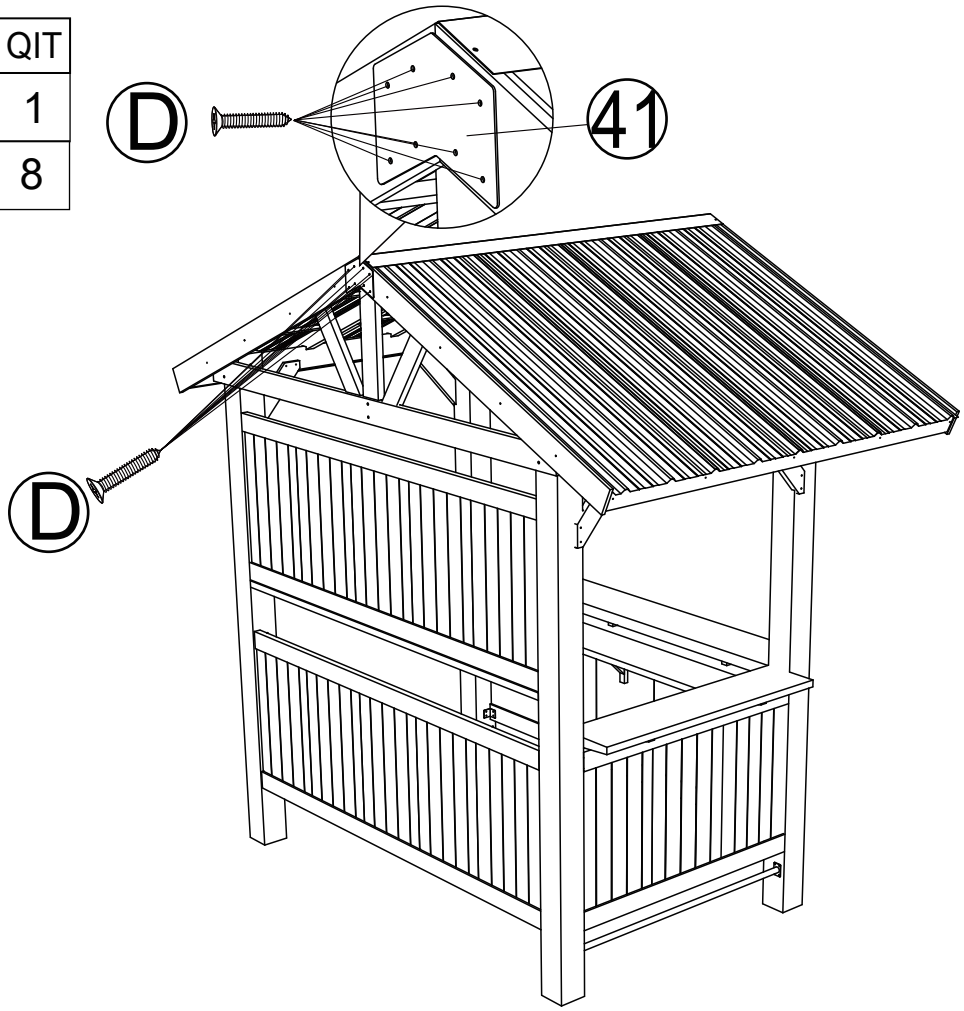

48

PART	NO	QIT
	㊶	1
	Ⓓ	8

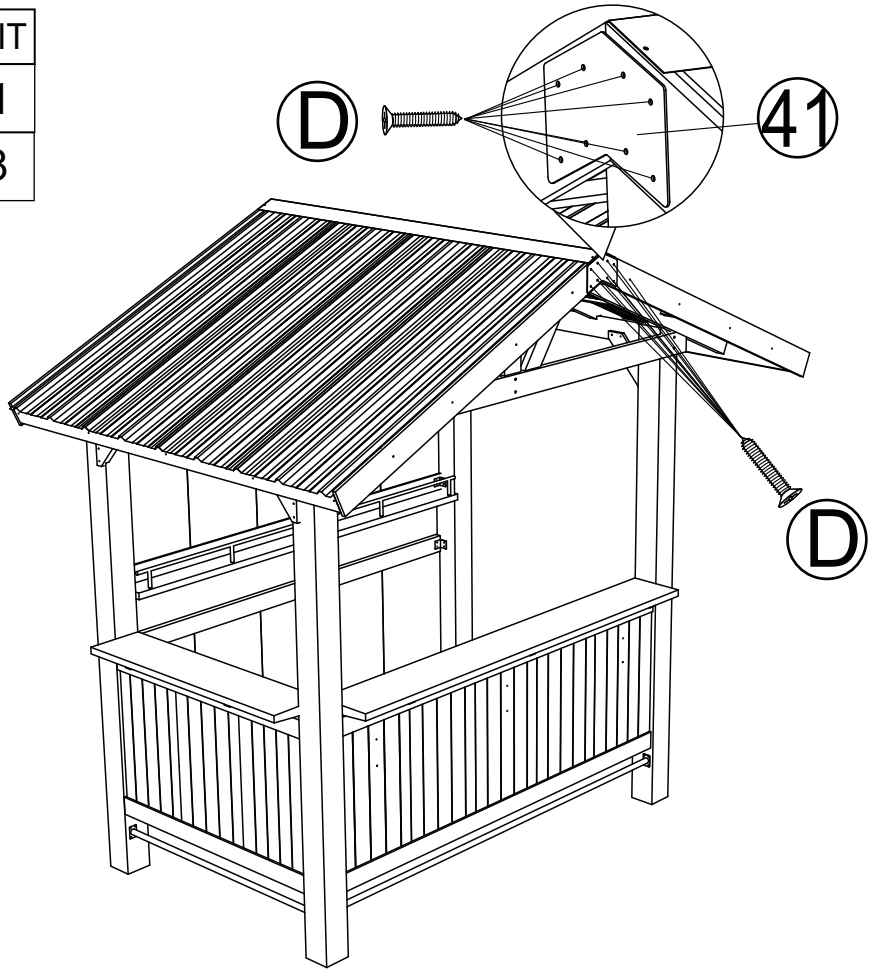

49

PART	NO	QIT
	㊷	1
	Ⓚ	6

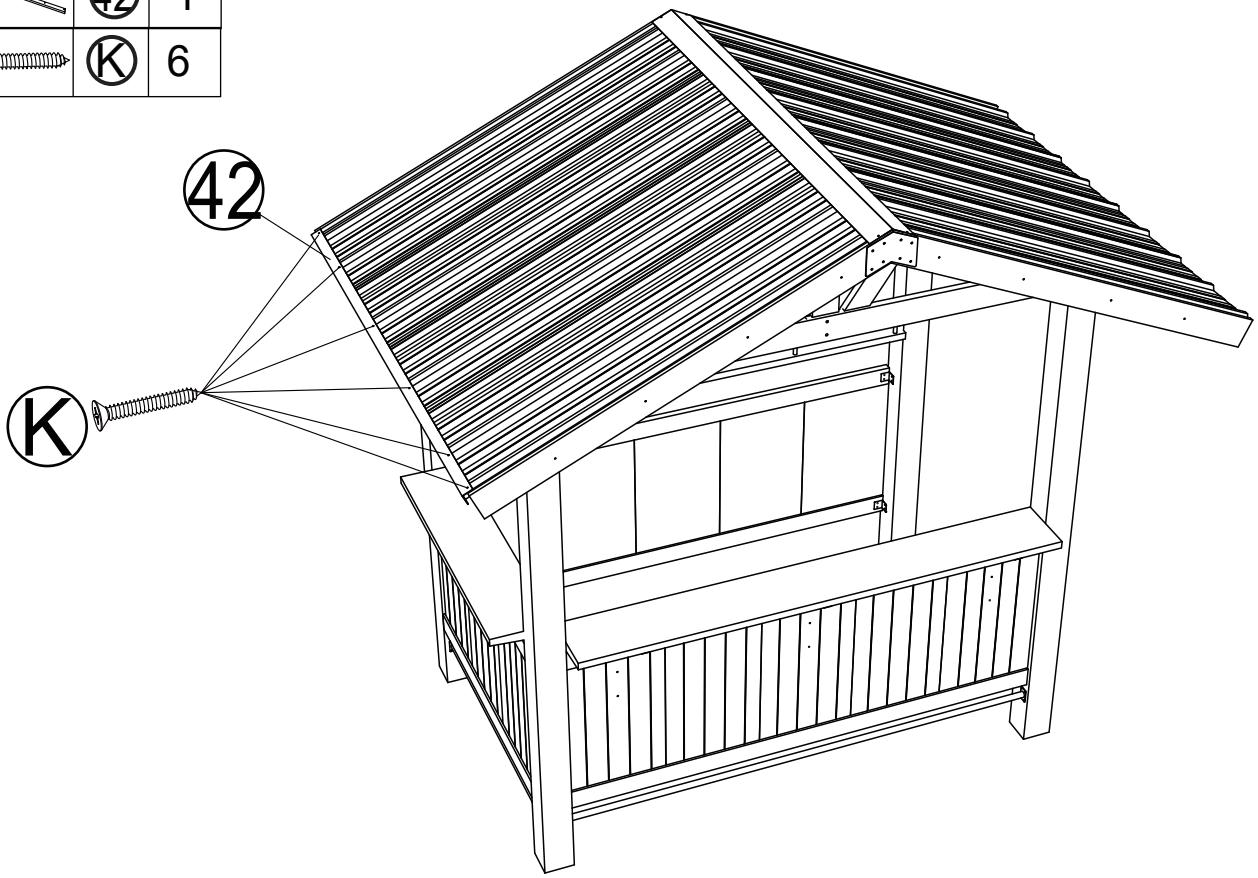

50

PART	NO	QIT
	㊷	1
	Ⓚ	6

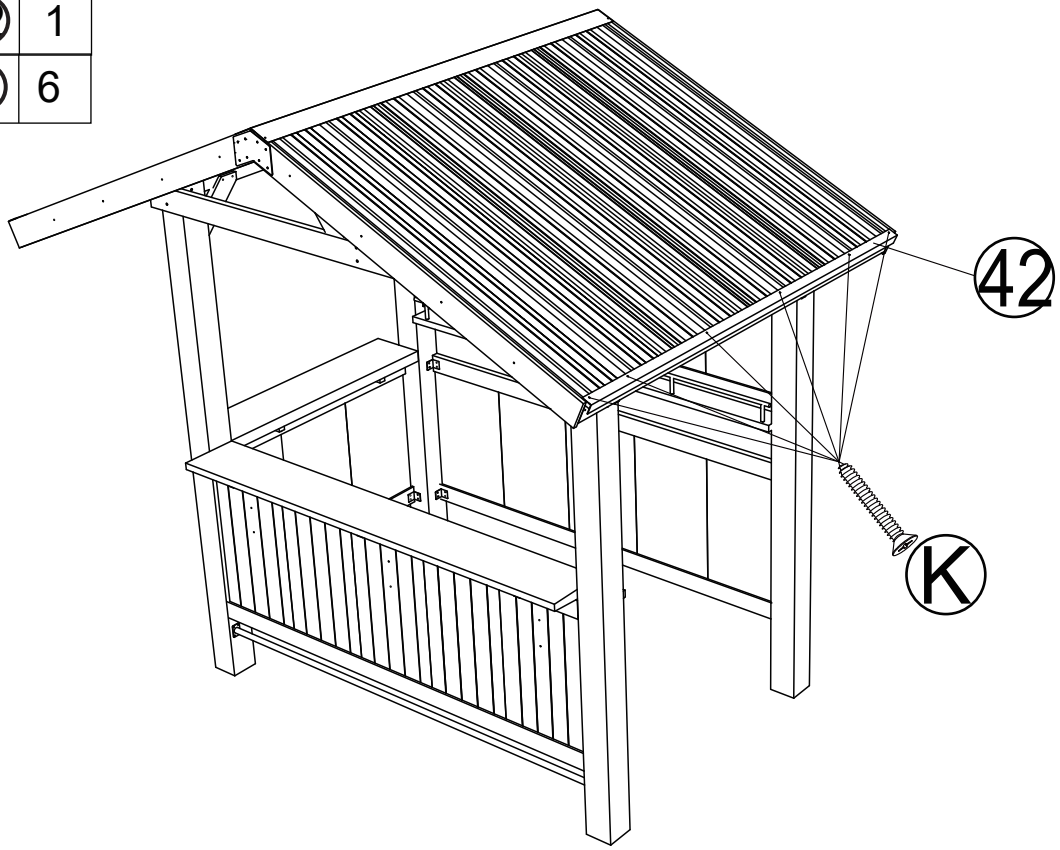

51

PART	NO	QIT
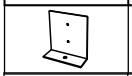	43	4
	I	8
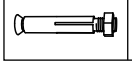	N	4

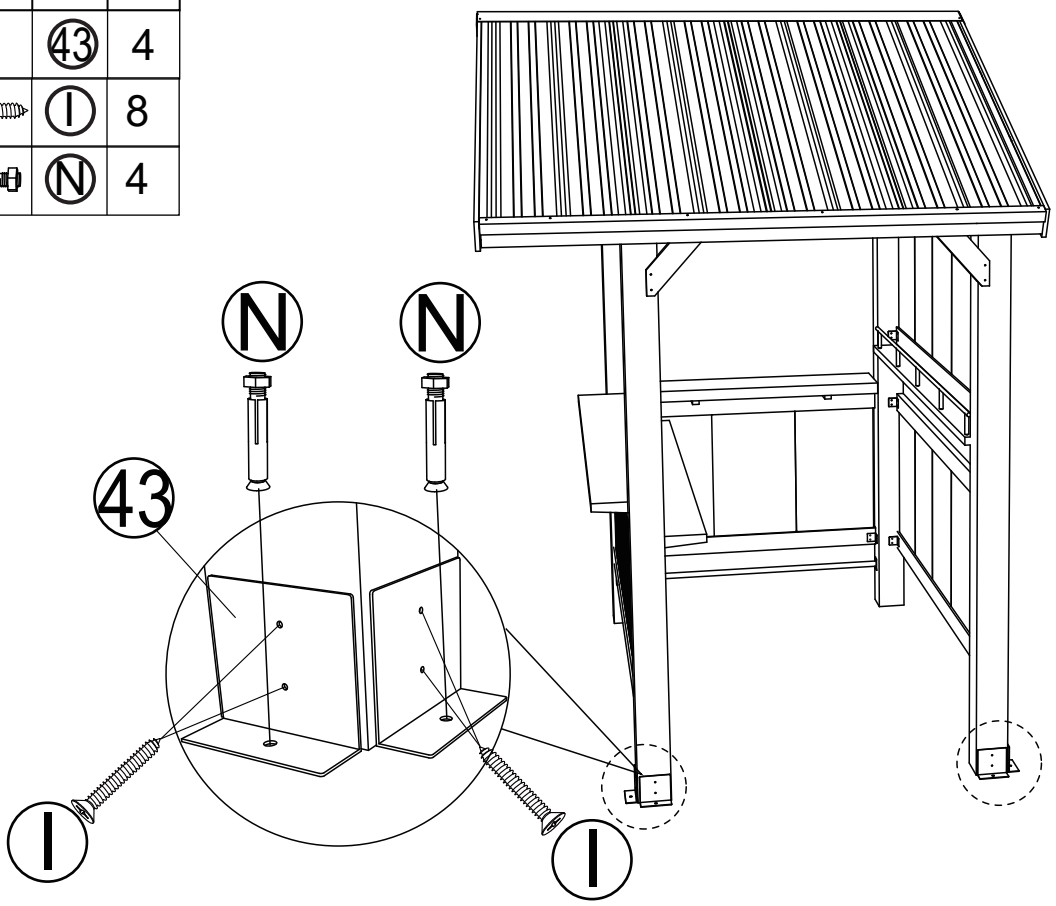

52

PART	NO	QIT
	43	4
	I	8
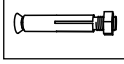	N	4

53

PART	NO	QIT
	㊹	2
	Ⓘ	4

Before installing the bracket ,confirm its mounting position based on the actual dimensions of the TV set.

54

PART	NO	QIT
	Ⓘ	2
	Ⓞ	1

Done