LOFT BED
ASSEMBLY INSTRUCTIONS

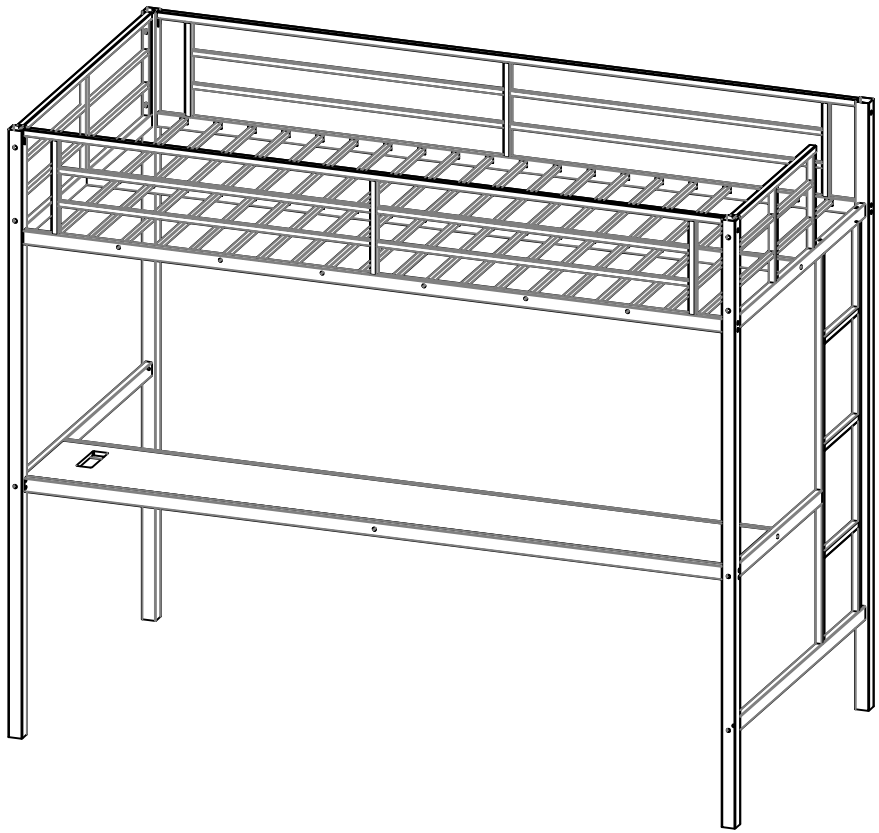

SAFETY WARNINGS AND GENERAL NOTES:

1. Follow the information on the warnings on the bunk bed end structure and on the carton. Do not remove the warning label from the bed.
2. Always use the recommended size mattress on mattress support, or both, to help prevent the likelihood of entrapment or falls.
3. Do not allow children under 6 years of age to use the upper bunk.
4. Periodically check and ensure the guardrail, ladder and other components are in their proper position, free from damage, and all connectors are tight.
5. Do not allow horseplay on or under beds.
6. Always prohibit jumping on the bed.
7. Prohibit more than one person on upper bunk.
8. Always use the ladder for entering and leaving the upper bunk.
9. Do not use substitute parts. Contact the manufacturer or dealer for replacement parts.
10. Use of a night-tight may provide added safety precaution for a child using the upper bunk.
11. Always use guardrails on both long sides of the upper bunk.
12. If the bunk bed will be placed next to a wall, the guardrail that runs the full length of the bed should be placed against the wall to prevent entrapment between the bed and the wall.
The use of water or sleep flotation mattresses is prohibited.
13. **STRANGULATION HAZARD**-Never attach or hang items to any part of the bunk bed that are not designed for use with the bed; for example, but not limited to, hooks, belts and jump ropes.
14. Keep these instructions for future reference.
15. We recommend assembling your bunk bed on the shipping carton to protect your floor or carpet.
16. Be certain all staples are out of the box before beginning assembly on the shipping carton.
17. USE ONLY MATTRESSES WHICH ARE AS THE TABLE BELOW ON UPPER AND ON LOWER BUNKS.
Up bed (bunk bed and tribed included)

Mattress size	Length	Width	Thickness
Twin xl Standard	79"-60"	38"-39"	6"max

18. SURFACE OF MATTRESS MUST BE AT LEAST 5"(127MM) BELOW THE UPPER EDGE OF GUARDRAILS.
19. Replacement Parts:
Replacement Parts, including additional guardrails, may be obtained from any of our dealers.

Bed parts view

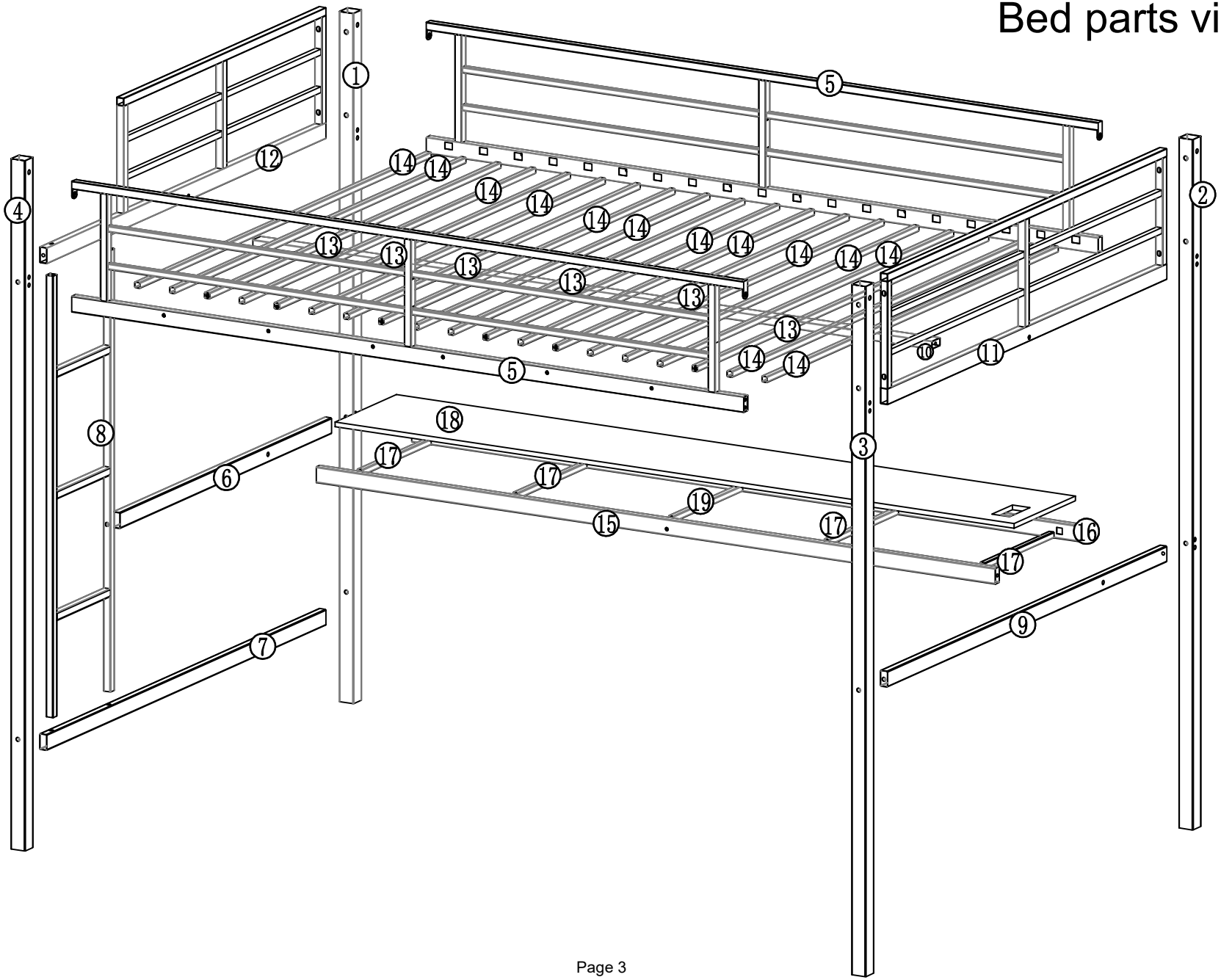

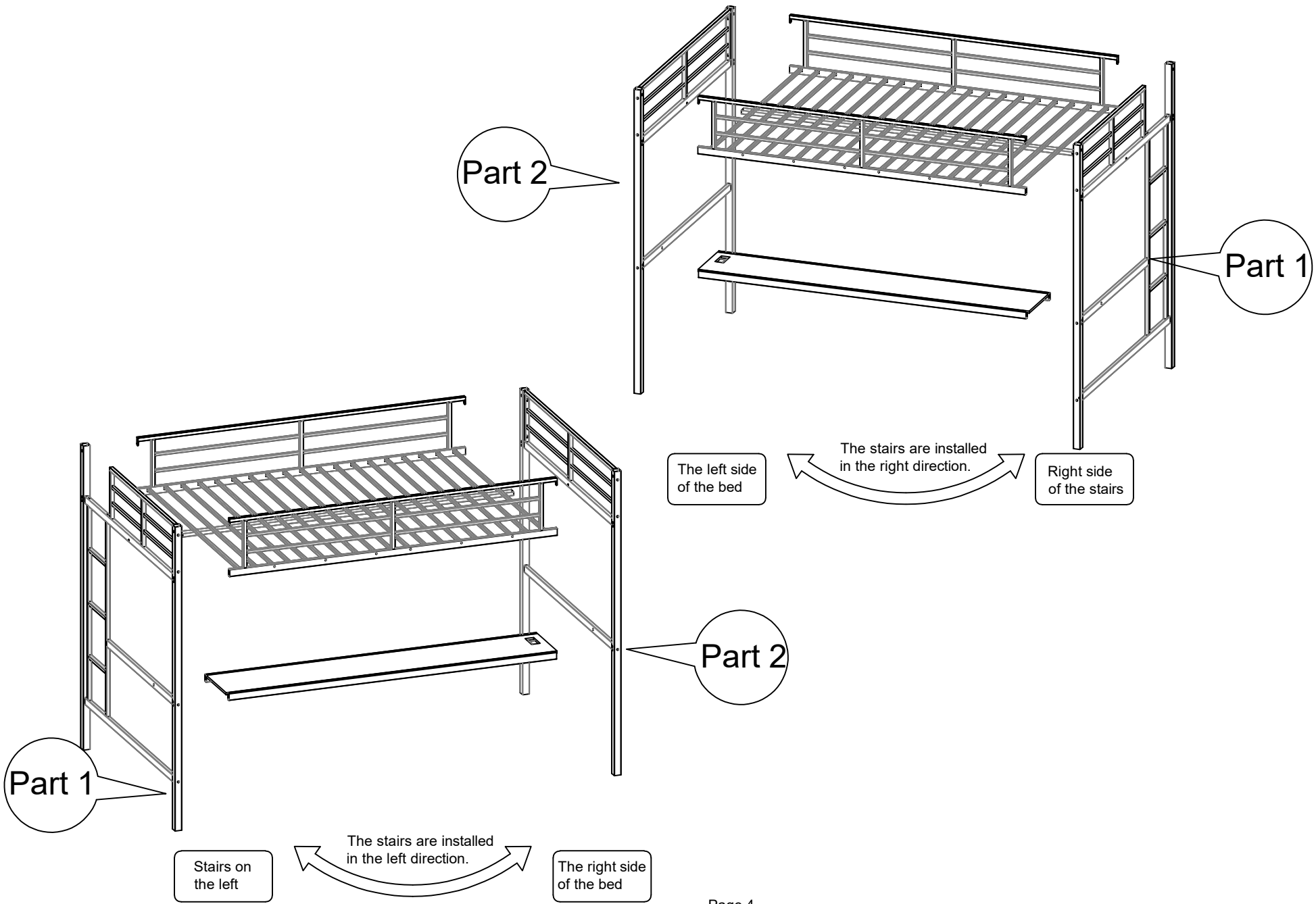
Part 2
Part 1
The left side of the bed
The stairs are installed in the right direction.
Right side of the stairs
Part 2
Part 1
Stairs on the left
The stairs are installed in the left direction.
The right side of the bed

Part List

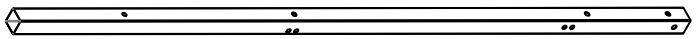

1-1pcs

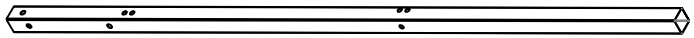

2-1pcs

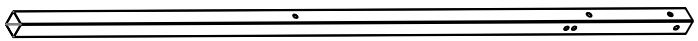

3-1pcs

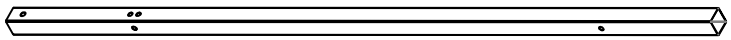

4-1pcs

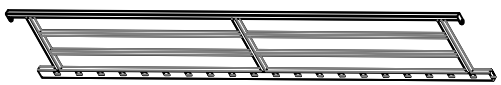

5-2pcs

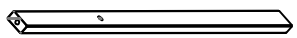

6-1pcs

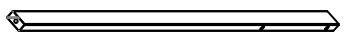

7-1pcs

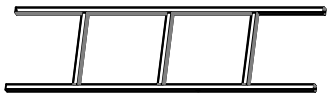

8-1pcs

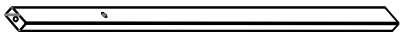

9-1pcs



10-1pcs

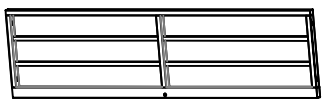

11-1pcs



12-1pcs



13-6pcs



14-14pcs

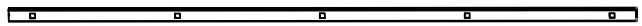

15-1pcs

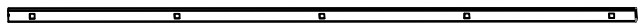

16-1pcs

17-4pcs

19-1pcs

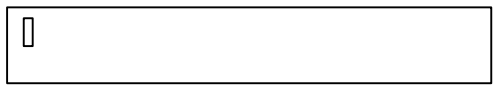

18-1pcs

Hardware List

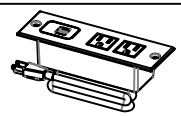

P
Socket
1pcs

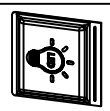

Q
Light strips
1pcs

A	C	D	E	O
4*10 2PCS	8*35 9PCS	8*55 28PCS	6*30 14PCS	

F	M	P	L1
8*15-10PCS		(Installed)	
U	T	N	L2
2PCS	4PCS	(Installed)	
			K
			40PCS

Step 1: Use hardware C,D,F and L to connect #1, #4,#8,#6,#7 and #12 together.

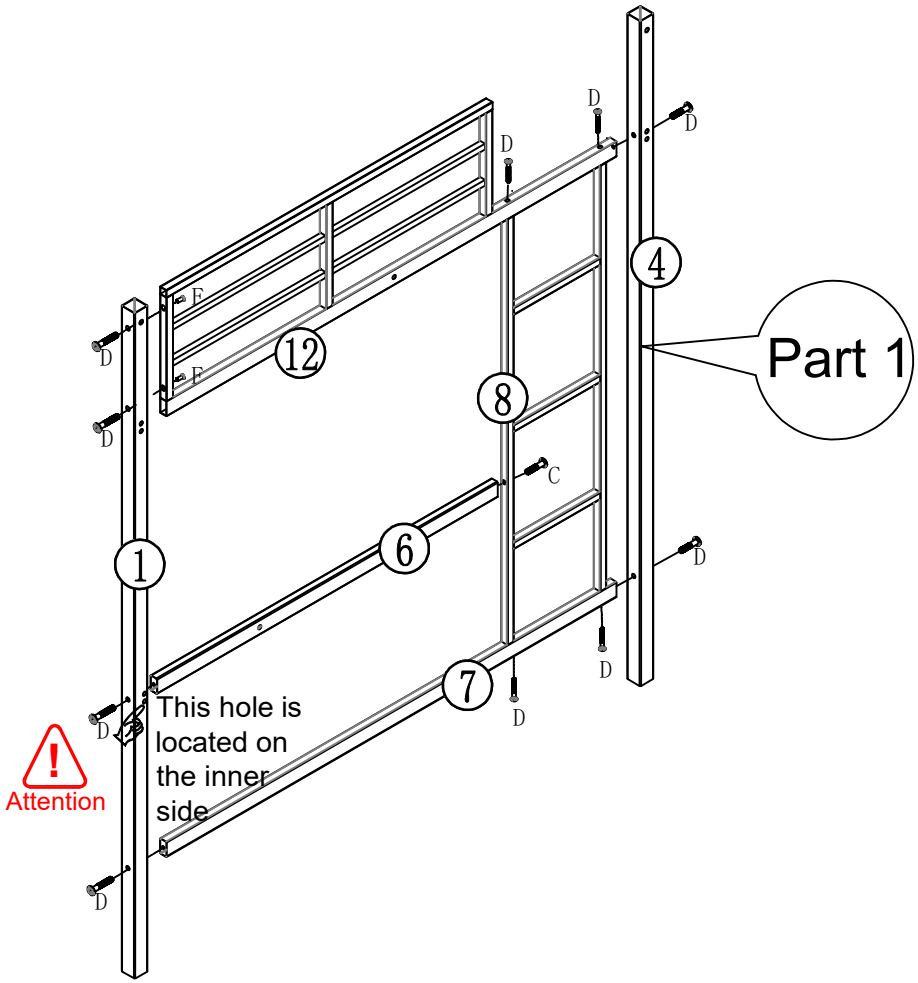

1-1pcs	7-1pcs	C 8*35-1PCS	D 8*55-10PCS	F 8*15-2PCS
4-1pcs	12-1pcs			
6-1pcs	8-1pcs	L		

Step 2: Use hardware D,F and L to connect #2, #3,#9 and #11 together.

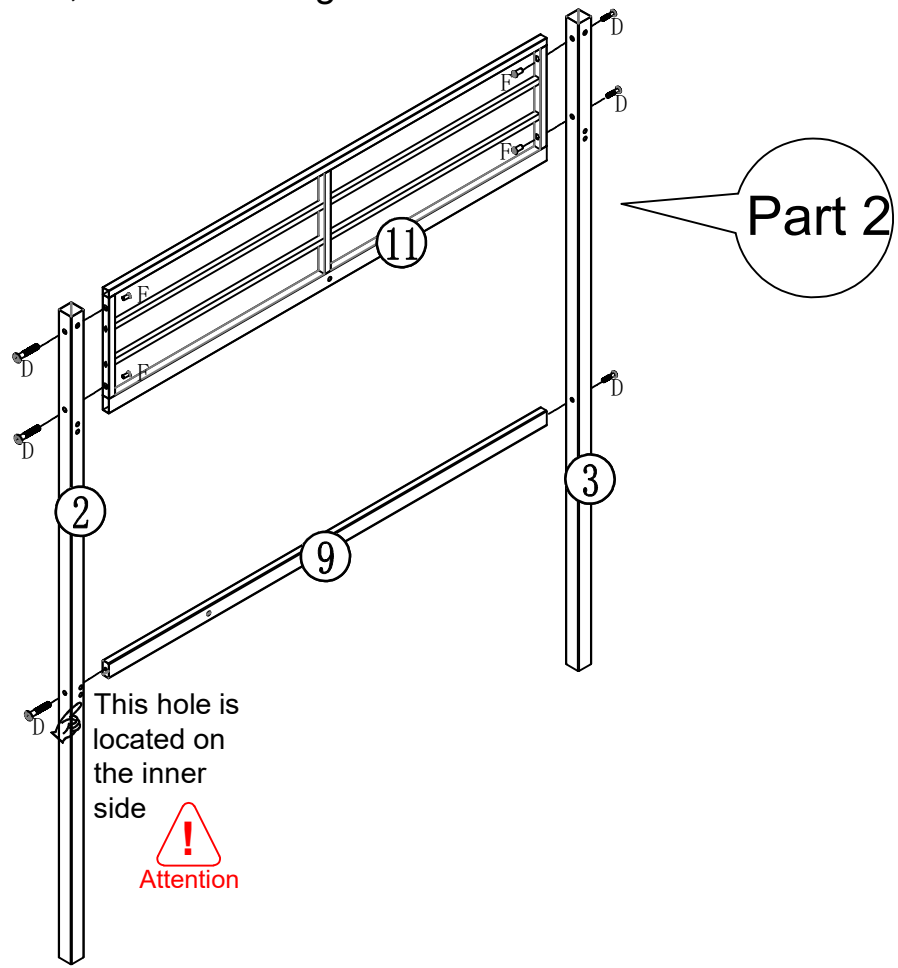

2-1pcs	11-1pcs	9-1pcs		
3-1pcs	D 8*55-6PCS	F 8*15-4PCS	L	

Step 3: Install part #K to parts #5 together.

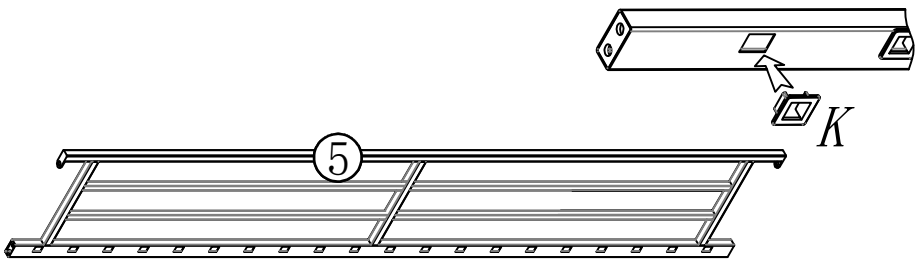

Please assemble 2 sets

Step 4: Use hardware D,F,C and L to connect #5, #16 and #10 together.

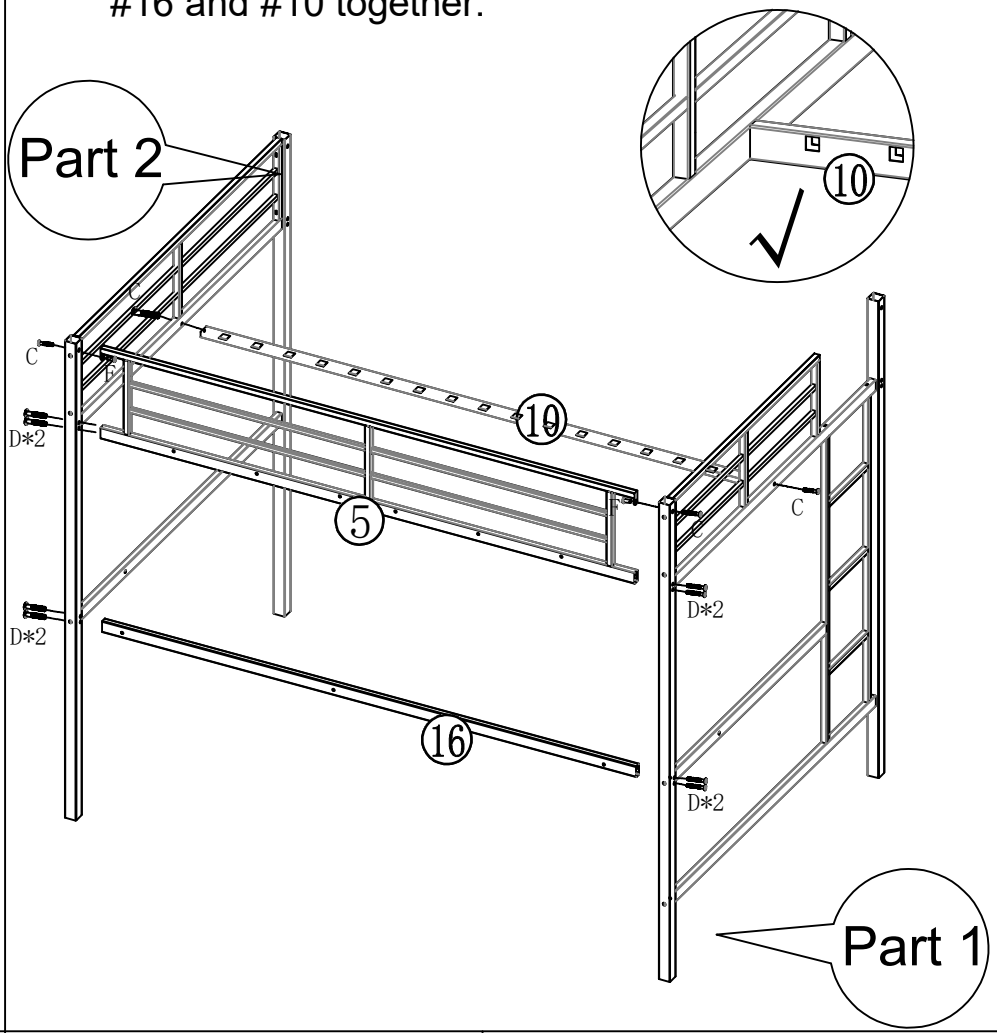

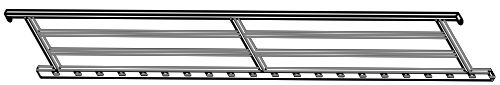

5-2pcs



K

40PCS

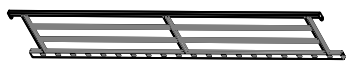

5-1pcs



10-1pcs



16-1pcs



D
8*55-8PCS



C
8*35-4PCS



F
8*15-2PCS



L

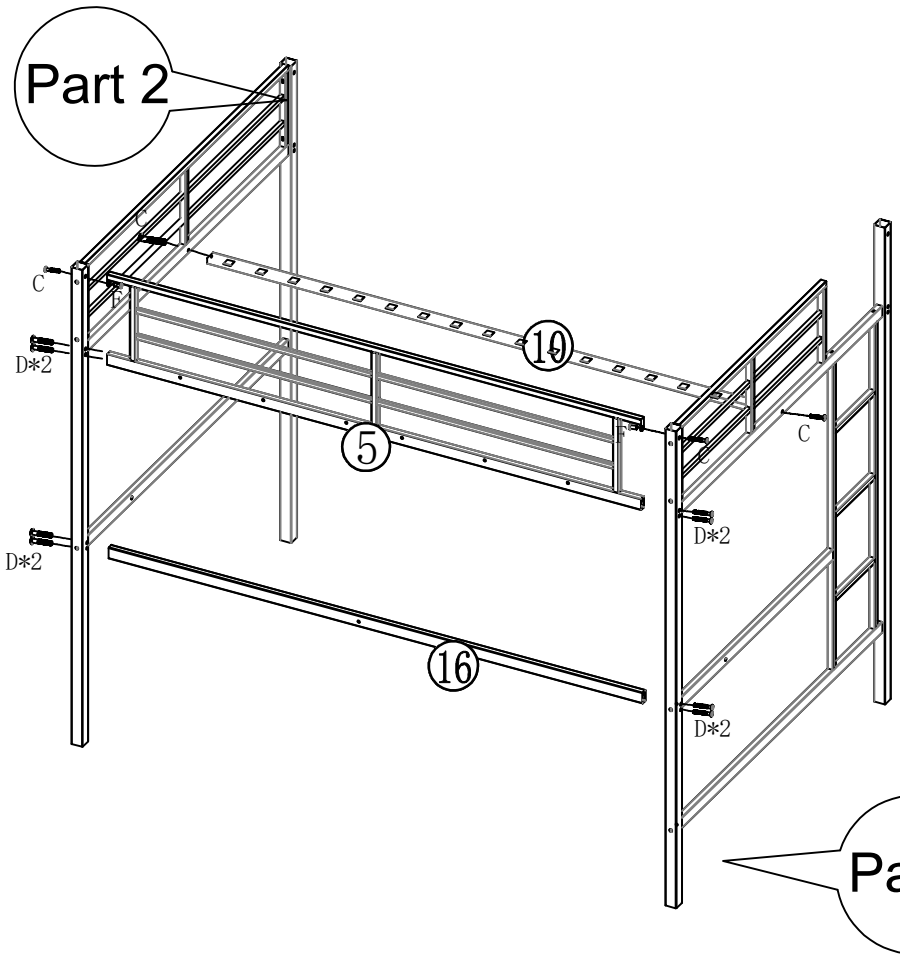

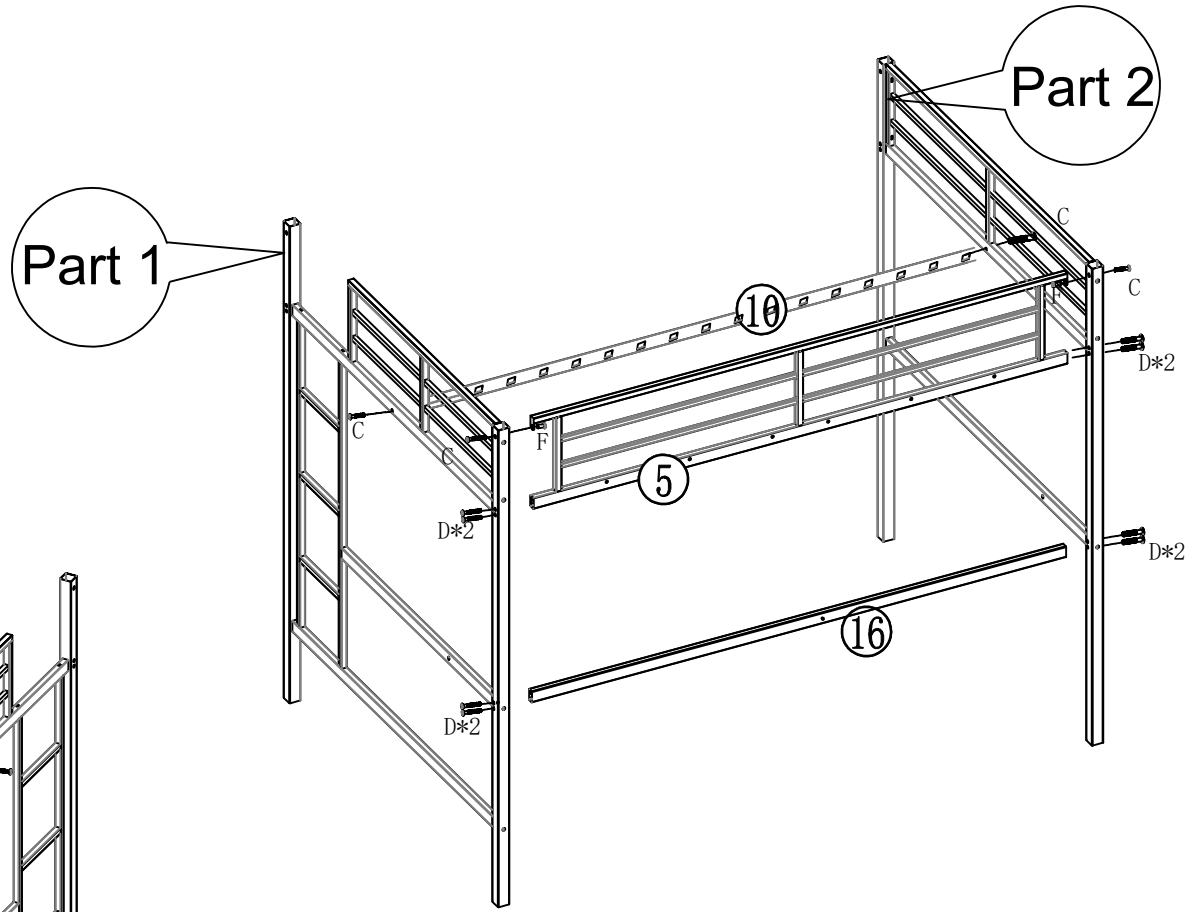

Attention

Part 1and Part 2
Can be installed
interchangeably

Step 5: Use hardware E,C and L to connect #13, #17 and #15 together.

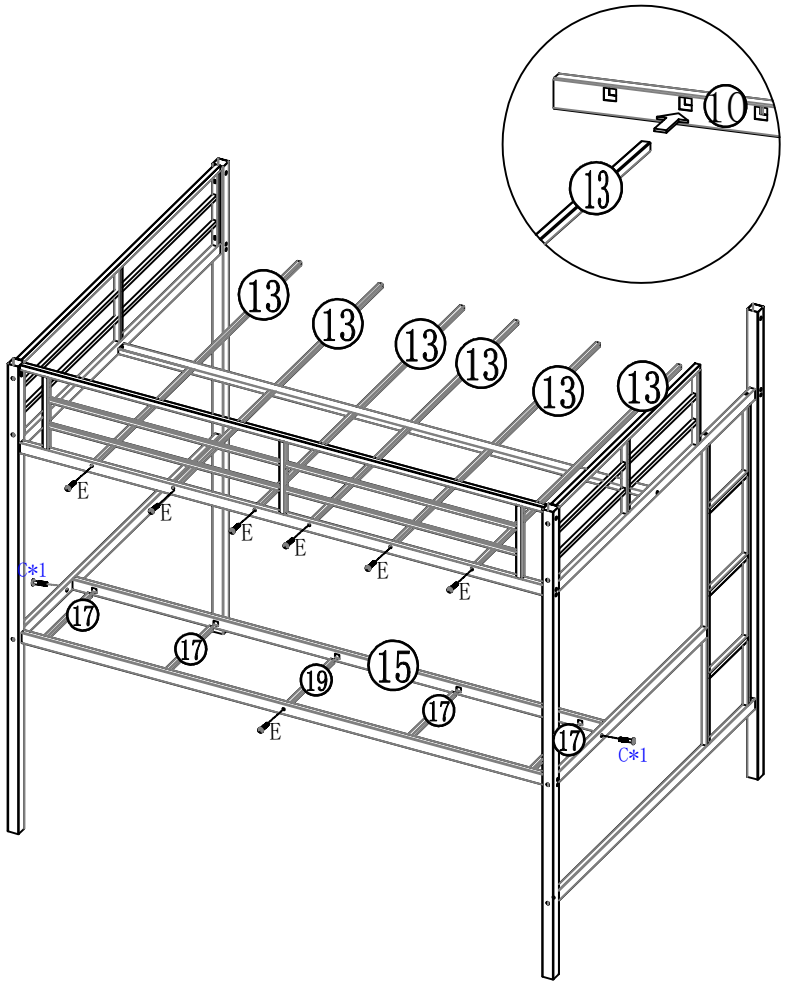

Step 6: Connect #14, #18 to the previously installed components.

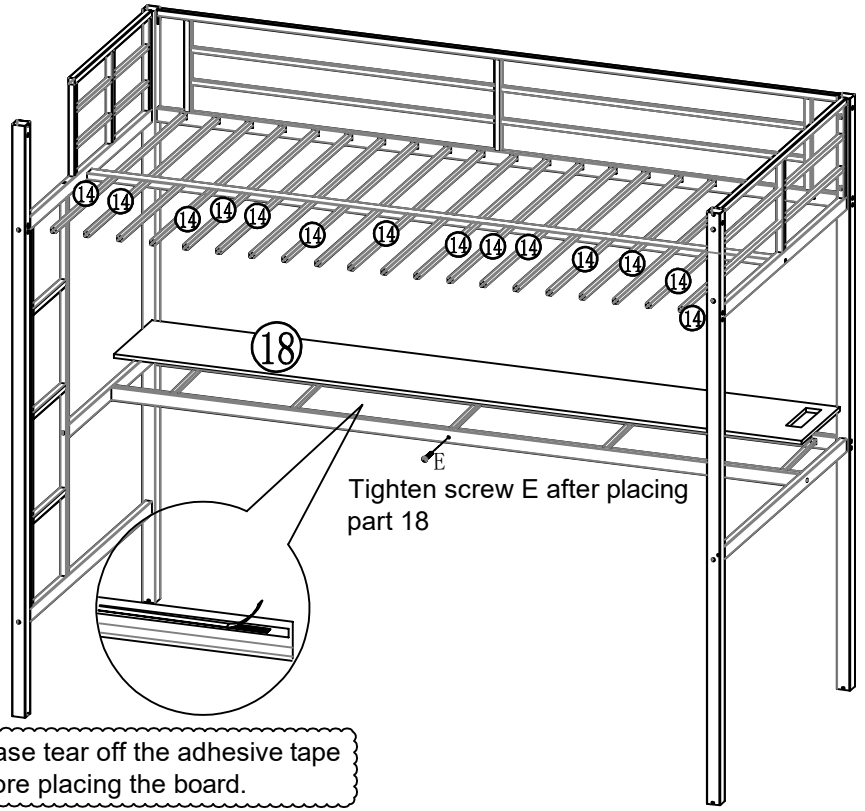

Please tear off the adhesive tape before placing the board.



13-6pcs



15-1pcs



17-4pcs



19-1pcs



L



E
6*30-7PCS



C
8*35-2PCS

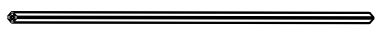

14-14pcs

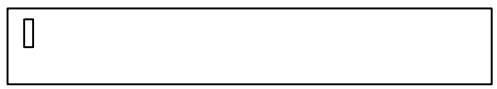

18-1pcs



E
6*30-1PCS



0

Step 7: Use hardware E,D,F,C and L to connect #5 together.

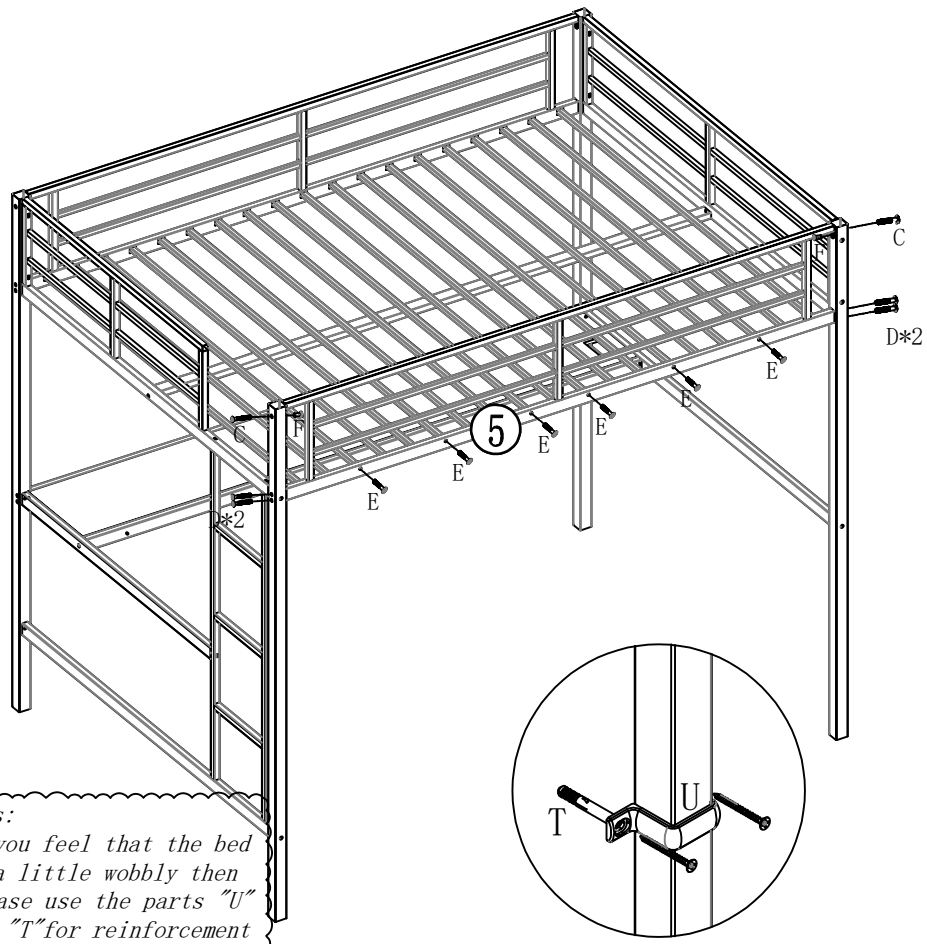

Tips:
If you feel that the bed is a little wobbly then please use the parts "U" and "T"for reinforcement



5-1pcs



L



E
6*30-6PCS



C
8*35-2PCS



D
8*55-4PCS



F
8*15-2PCS

Completed loft bed

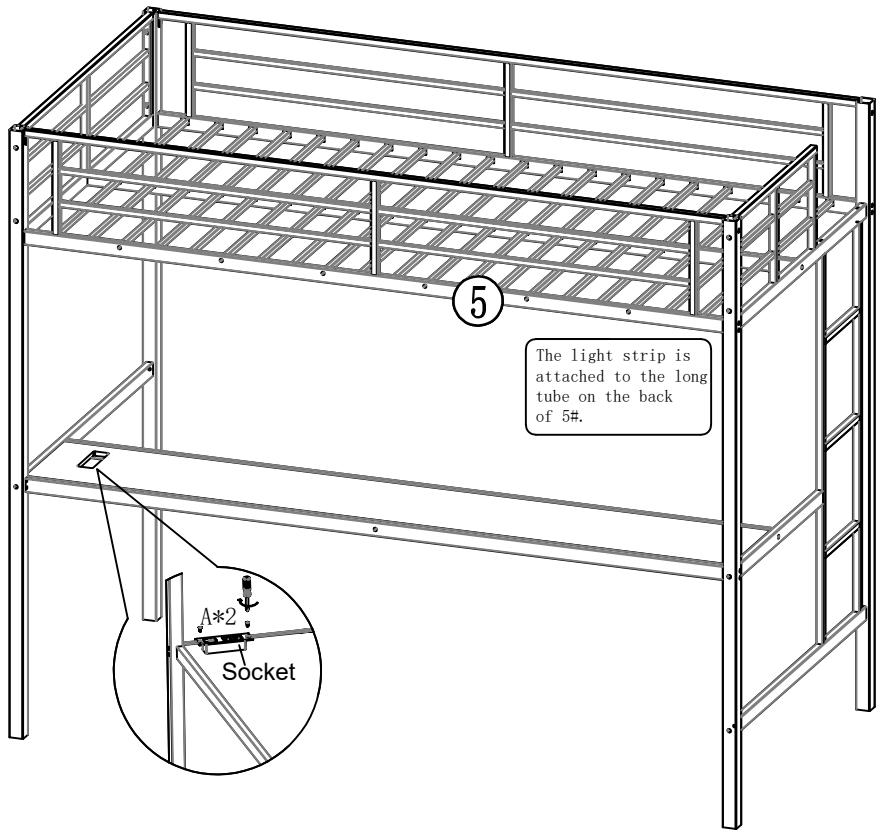

Attention

Please tighten all screws before use, thank you.