4-Tier Bookcase
Item # HS202606-19
INSTRUCTION

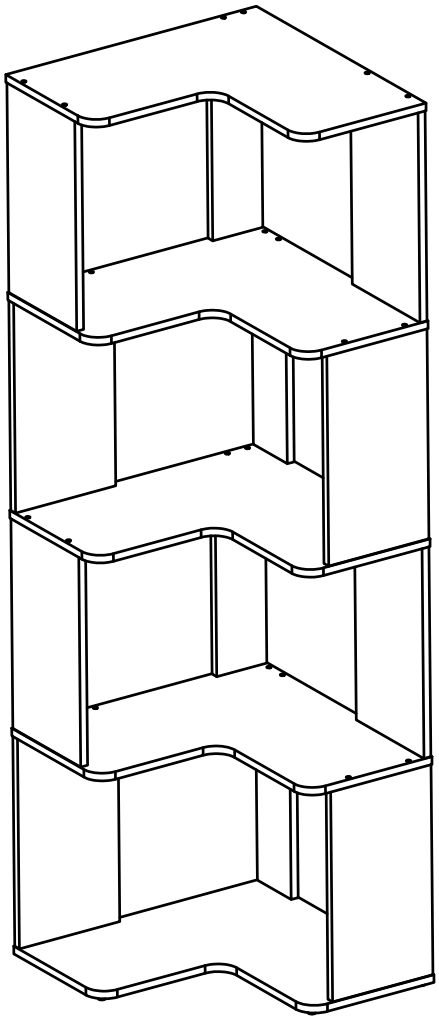

Main Components

Please check you have all the parts listed below

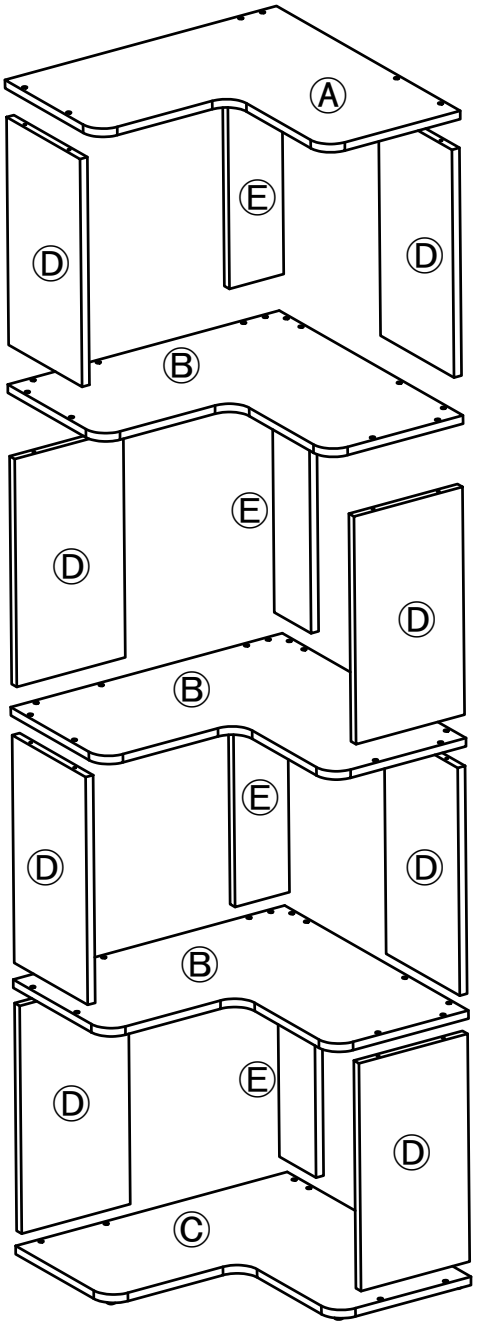

Component Panels & Part List

Please check you have all the parts listed below

Ⓐ

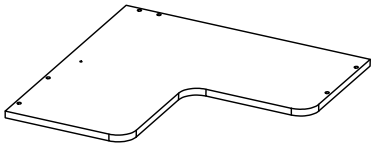

1PC

Ⓑ

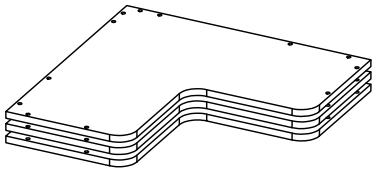

3PCS

Ⓒ

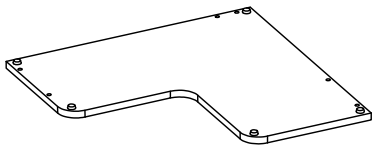

1PC

Ⓓ

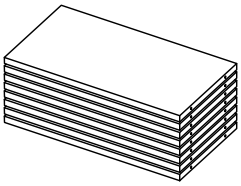

8PCS

Ⓔ

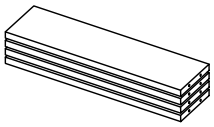

4PCS

Fixings, Fittings And Tools

Please check all the fittings listed below

Note: The quantities below are the correct amount to complete the assembly.
In some case more fittings may be supplied than be required.

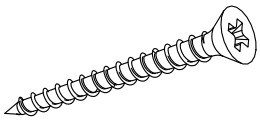

① Ø4*38mm
48+2PCS

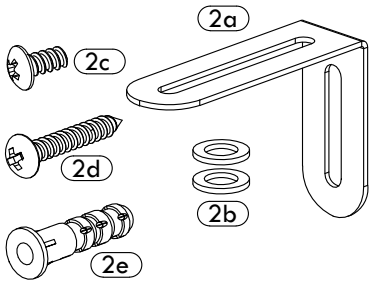

② 1SET



③ Ø12mm
42+2PCS

Assembly Step

Step 1

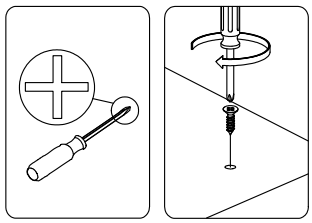

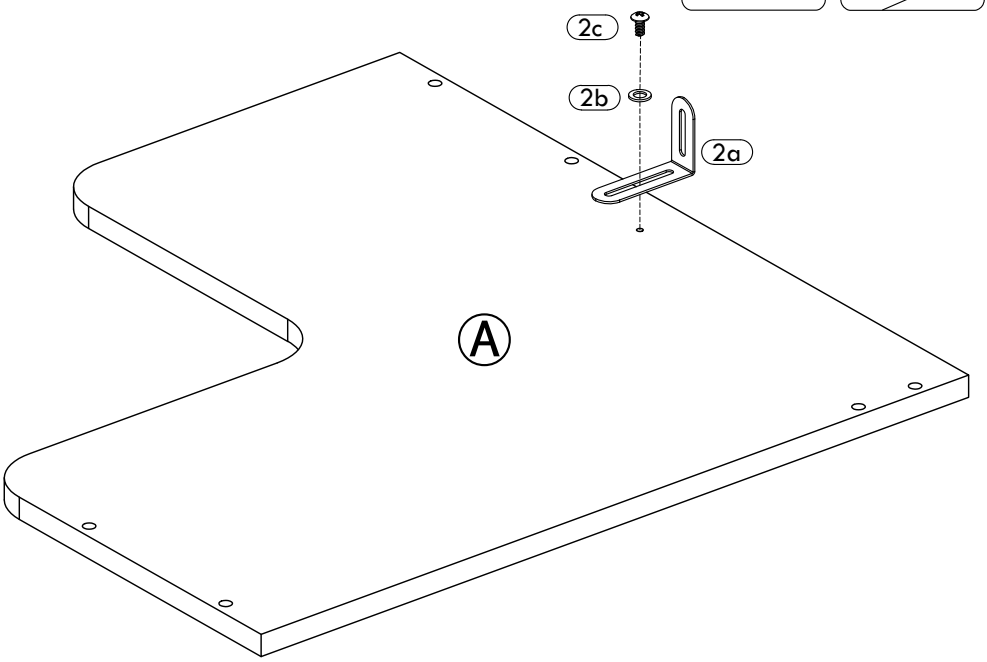

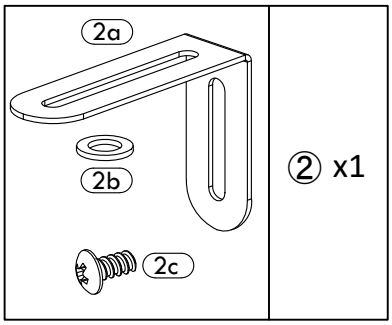

② x1

Step 2

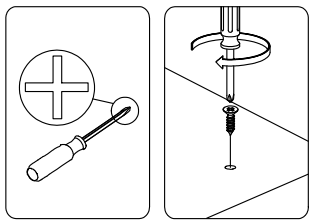

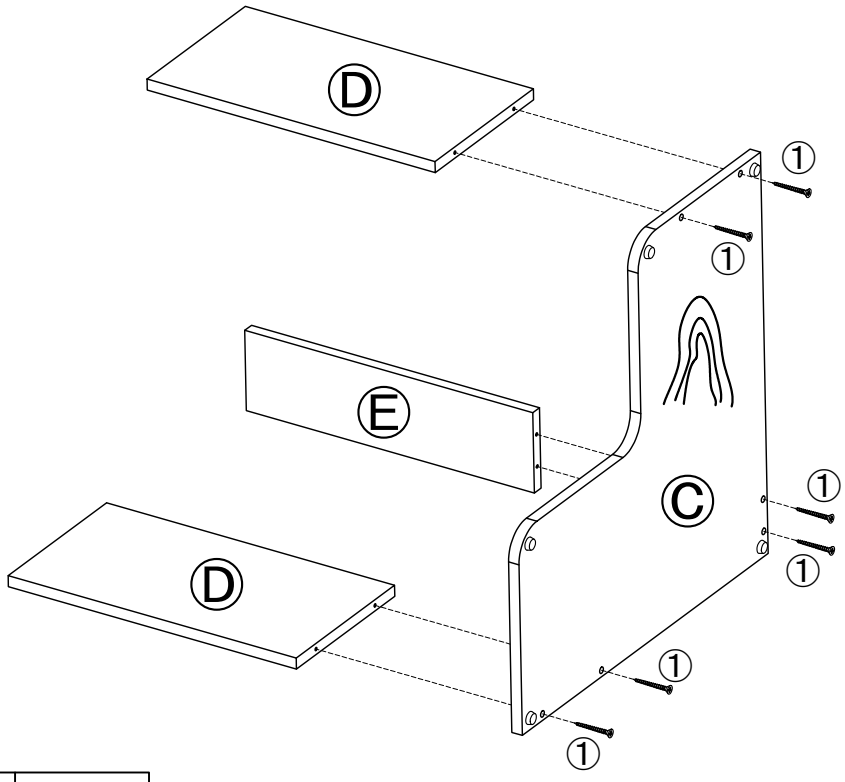

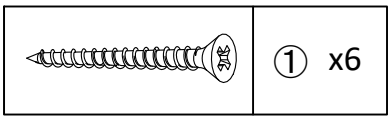

① x6

Step 3

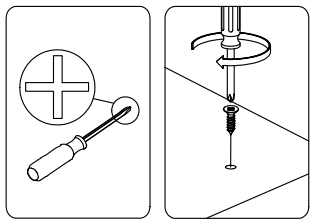

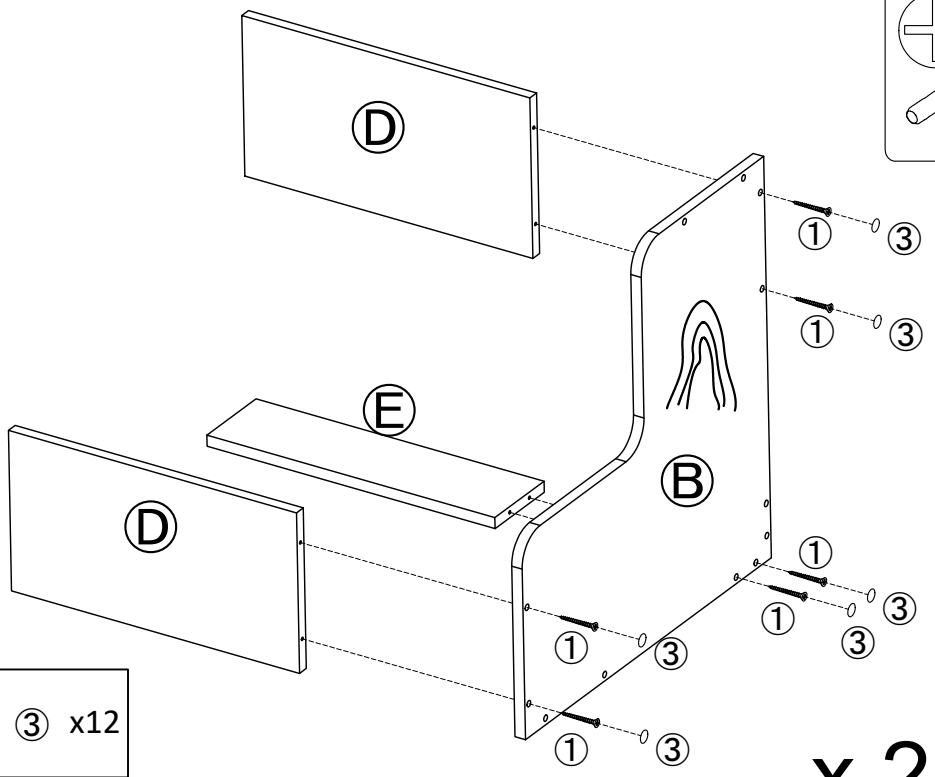

	③ x12
	① x12

Step 4

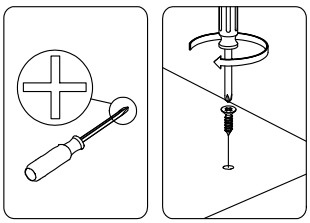

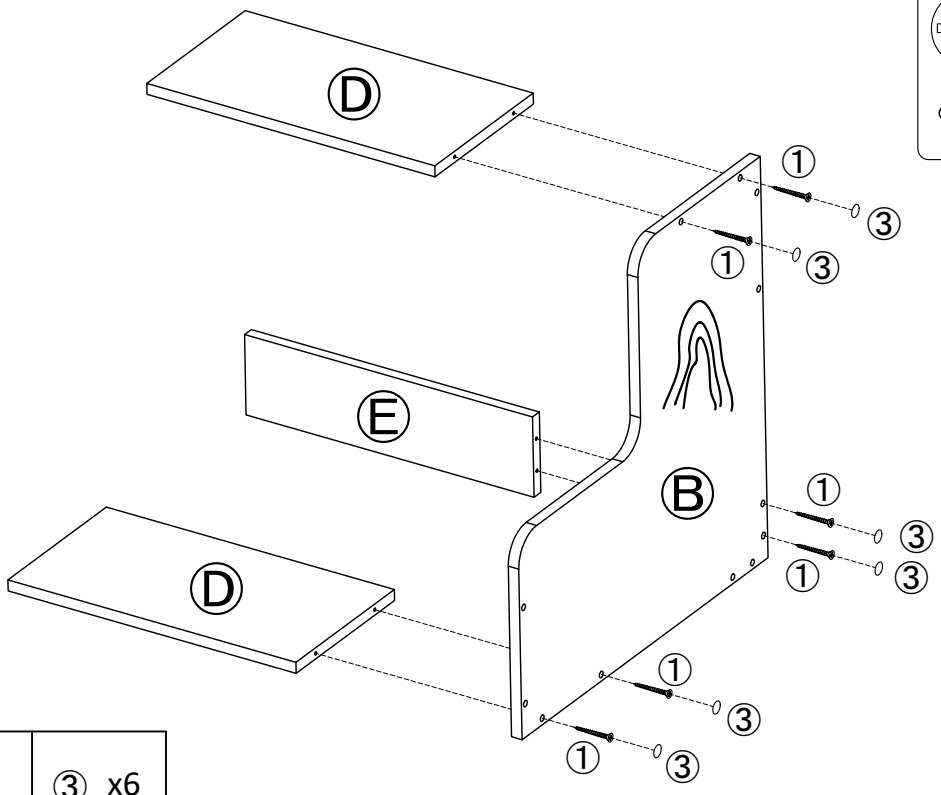

	③ x6
	① x6

Step 5

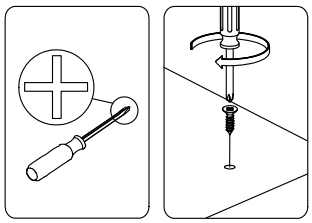

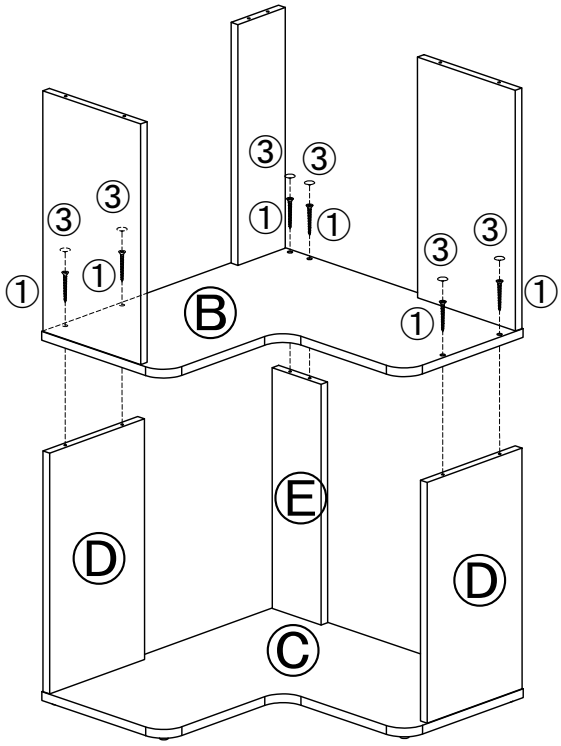

	③ x6
	① x6

Step 6

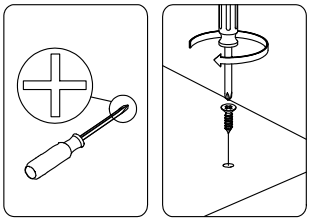

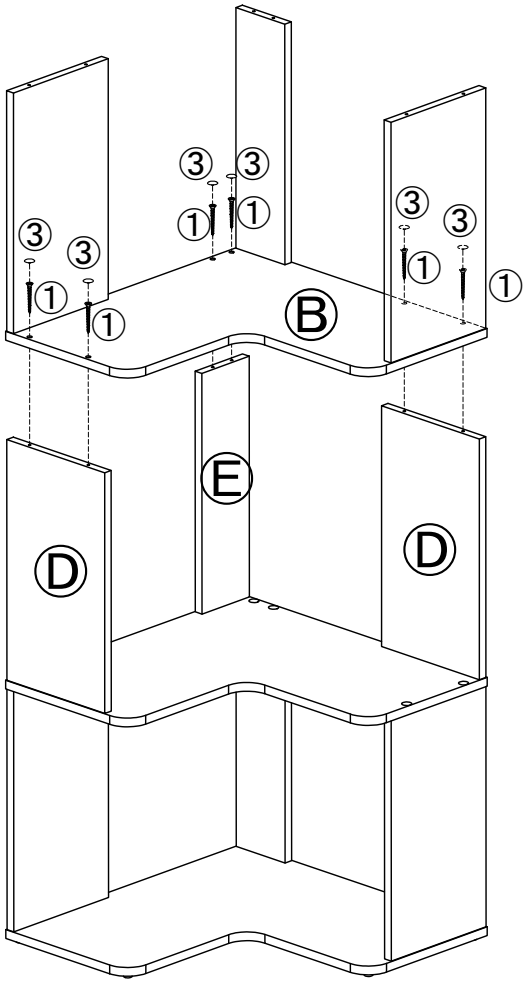

	③ x6
	① x6

Step 7

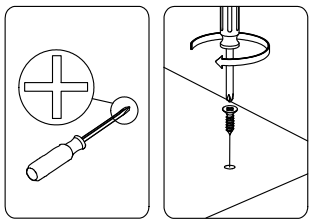

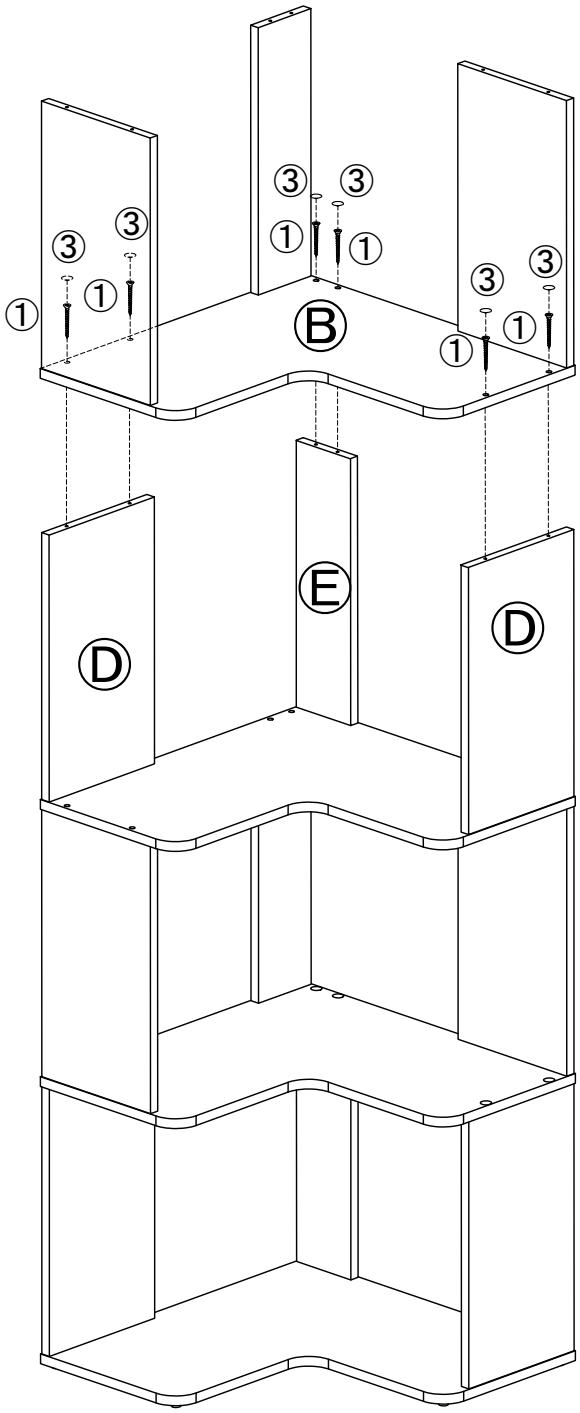

	③ x6
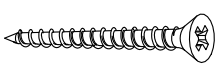	① x6

Step 8

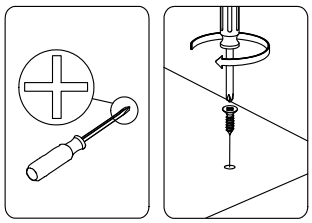

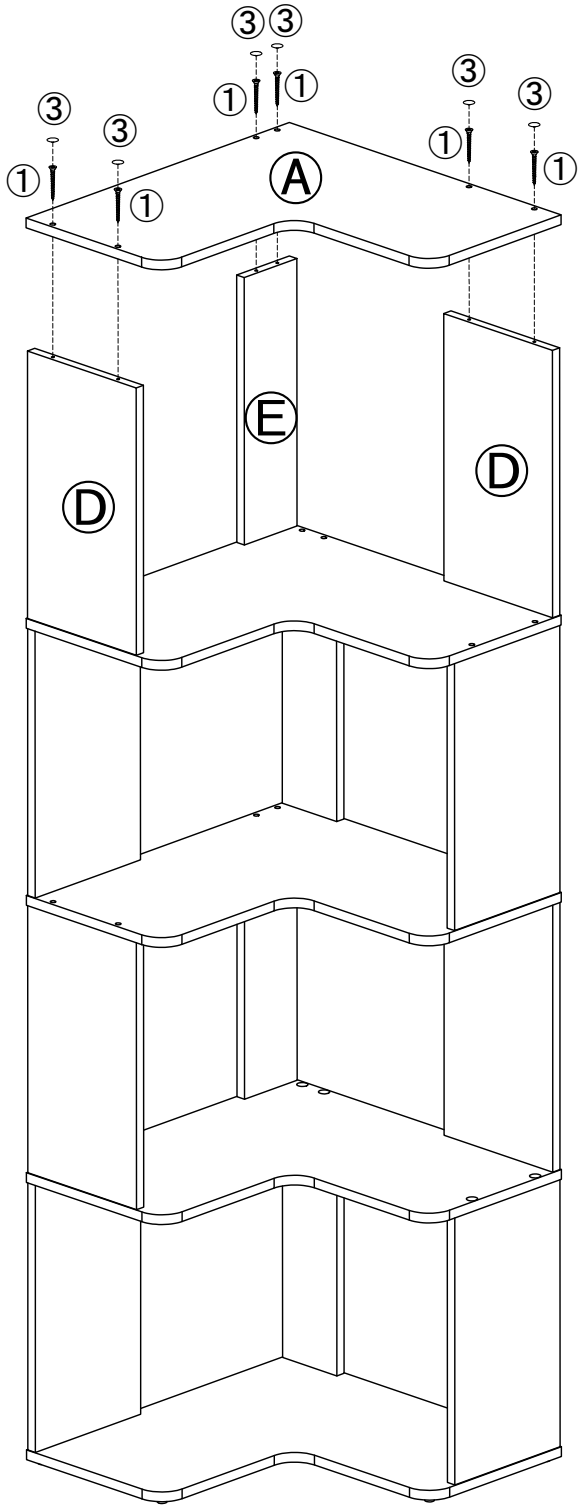

	③ x6
	① x6

Step 9

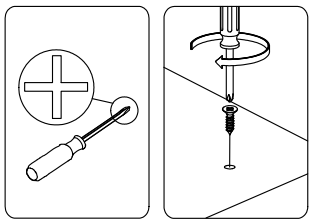

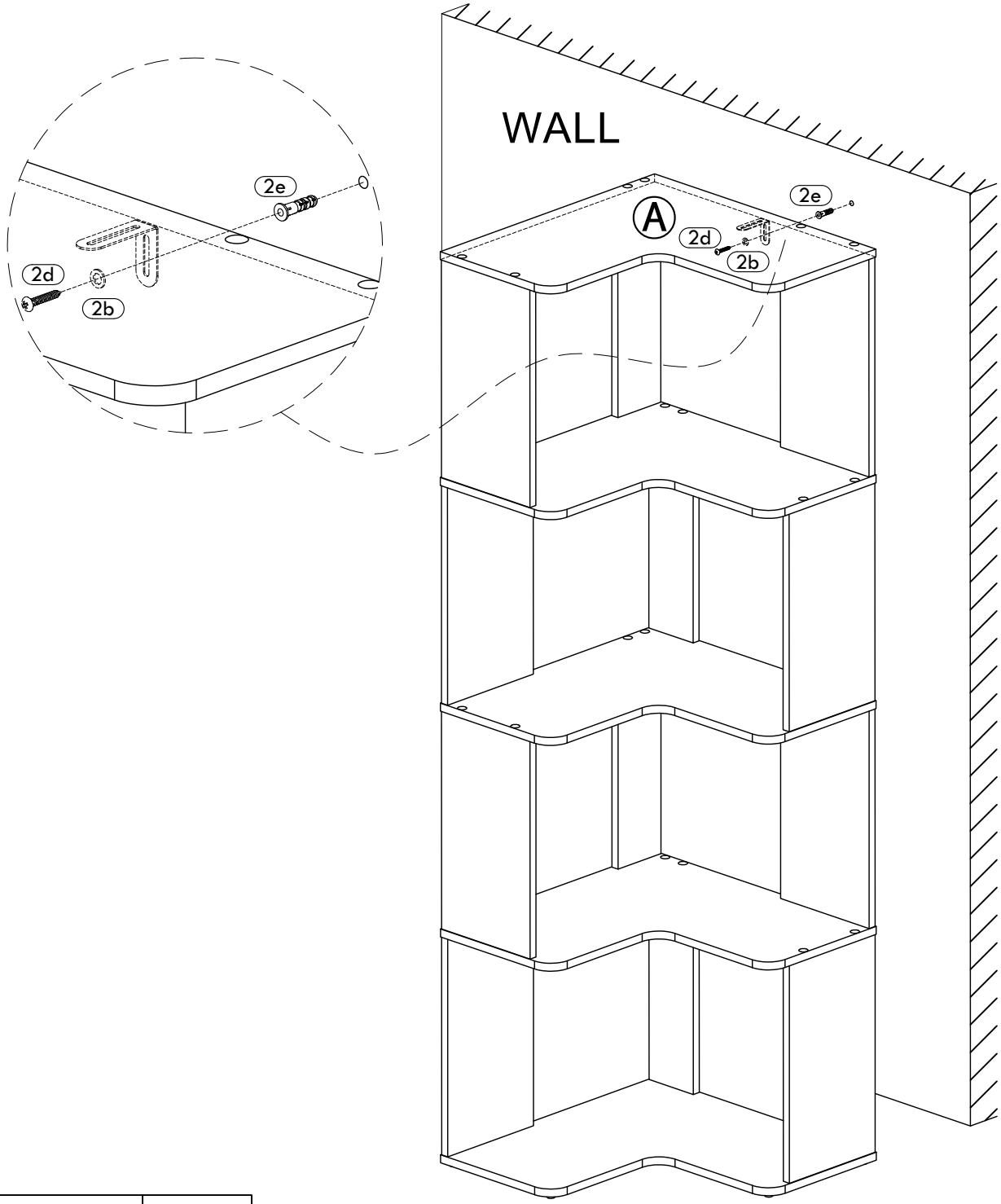

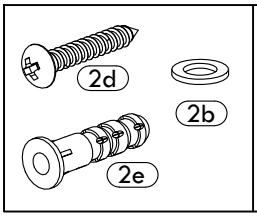	② x1