ELECTRIC FIREPLACE HOMEOWNERS OPERATING MANUAL

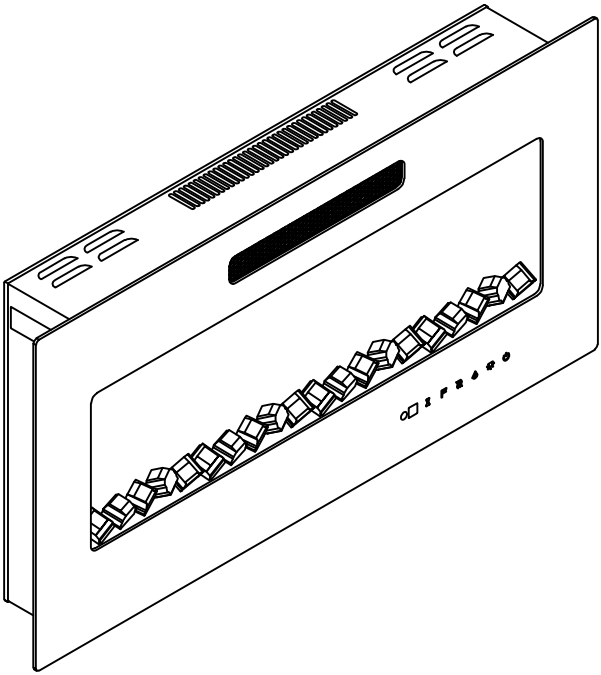

The actual appearance should be subject to the purchase model

---

CONSUMER SAFETY INFORMATION: PLEASE READ THIS MANUAL BEFORE INSTALLING AND OPERATING THIS APPLIANCE. FAILURE TO FOLLOW THESE INSTRUCTIONS MAY RESULT IN A POSSIBLE ELECTRIC SHOCK, FIRE HAZARD, AND/OR INJURY AND WILL VOID THE WARRANTY.

WARNING: IF THE INFORMATION IN THIS MANUAL IS NOT FOLLOWED, AN ELECTRIC SHOCK OR FIRE MAY RESULT IN PROPERTY DAMAGE, PERSONAL INJURY, OR LOSS OF LIFE.

THIS INSTRUCTION BOOKLET CONTAINS IMPORTANT SAFETY INFORMATION. PLEASE READ AND KEEP FOR FUTURE REFERENCE.

IMPORTANT INSTRUCTIONS

When using electrical appliances, basic precautions should always be followed to reduce the risk of fire, electrical shock, and/or injury including the following:

1. Read all instructions before using this heater.
2. This heater is hot when in use. To avoid burns, do not let bare skin touch hot surfaces. Keep combustible materials, such as furniture, pillows, bedding, papers, clothes, etc. and curtains at least 3 feet (0.9 m) from the front of the heater and keep them away from the sides and rear.
3. Extreme caution is necessary when any heater is used by or near children or invalids and whenever the heater is left operating and unattended.
4. Do not operate any heater after it malfunctions. Disconnect power at service panel and have heater inspected by a reputable electrician before reusing.
5. Always unplug this appliance when not in use.
6. Do not operate any heater with a damaged cord or plug or after the appliance malfunctions, or if it has been dropped or damaged in any manner.
7. If the supply cord is damaged, it must be replaced by the manufacturer, it's service agent or similarly qualified persons in order to avoid a hazard.
8. Any repairs to this fireplace should be carried out by a qualified service person.
9. Under no circumstances should this fireplace be modified. Parts having to be removed for servicing must be replaced prior to operating this fireplace again.
10. Do not use outdoors.
11. This heater is not intended for use in bathrooms, laundry areas and similar indoor locations.
Never locate this appliance where it may fall into a bathtub or other water container.
12. Do not run cord under carpeting. Do not cover cord with throw rugs, runners or the like. Arrange cord away from traffic areas and where it will not be tripped over.
13. To disconnect this appliance, turn controls to the off position, then remove plug from outlet.
14. Connect to properly grounded outlet only.
15. This appliance, when installed, must be electrically grounded in accordance with local codes or, in the absence of local codes, with the current CSA C22.1 Canadian Electrical Code or for USA installations, follow local codes and the National Electrical Code, ANSI/NFPA NO.70.
16. There is a protective thermostat limiter inside the heater. When the inner temperature over heat, the thermostat limiter will shut off the power supply to avoid the risk of fire damage to the appliance.
17. The heaters must not be located immediately below a socket-outlet.
18. Do not insert or allow foreign objects to enter any ventilation or exhaust opening as this may cause an electric shock or fire, or damage the appliance.

19. To prevent a possible fire, do not block air intakes or exhaust in any manner. Do not use on soft surfaces, like bed, where opening may become blocked.
20. This appliance has hot and arcing or sparking parts inside. Do not use where gasoline, paint, or flammable liquids are used or stored. This fireplace should not be used as a drying rack for clothing.
Christmas stockings or decorations should not be hung in area of it.
21. Use this appliance only as described in the manual. Any other use not recommended by the manufacturer may cause fire, electric shock or injury to persons.
22. Always plug heaters directly into a wall outlet/receptacle. Never use with an extension cord or relocatable power tap (outlet/power strip).

SAVE THESE INSTRUCTIONS

PLANNING INSTALLATION

The unit comes standard with 6 feet (1.8M) three wire cord, exiting from the right of the fireplace.
Plan the installation to avoid the use of an extension cord. When choosing a final location, make sure you will have clear access to grounded electrical outlet.
Before you begin assembly, locate the instructions and hardware. Compare all parts with the
Hardware Included and Package Contents lists. Be sure you have all the parts and can identify
them. A helping hand is always good. Assemble your fireplace with an adult assistant if possible.
Some pieces are heavy and will need to be held by a helper. Assembly time will take approximately15-30 minutes.

Getting Started

- Remove the appliance from the box.
- Remove any packaging from the product.
- Place the packaging inside the box and cither store or dispose of safely.
- Carton contents are as follows.

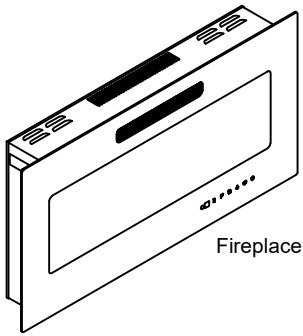

Fireplace

Remote Control

Acrylic crystals

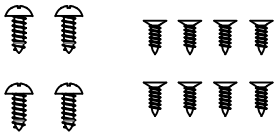

screws

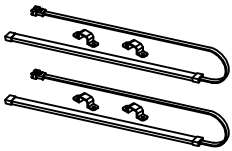

2 LED light bars

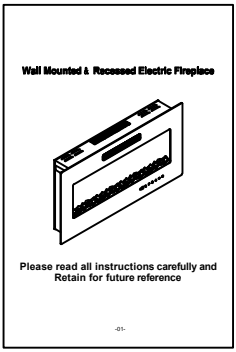

Manual

ELECTRICAL SPECIFICATIONS
Voltage: 120VAC
Rating: 1500 Watts
Frequency: 60Hz

Helpful Advice before Fitting

- Please retain all packaging until you have checked and counted all the parts and the contents of the hardware pack against the parts list.
- The hardware pack contains small items which should be kept away from children and babies.

- We suggest that you open the hardware pack and place all the contents into a container, therefore reducing the risk of losing any small pieces.
  Installation (see Fig1~Fig4)
- Do not connect the appliance until properly fixed to the wall and the instructions are fully read.
- The minimum distances must be observedin the diagrams.
- For installation of the appliance,care must be taken not to damage conccaled cables.
- Please be careful while drilling the holes.

INSTALL THE ELECTRIC FIREPLACE INTO THE WOOD MANTEL

- Remove four silver screws from the sides of the heater,two screws on each side. Remove two screws from the front of the heater.Remove the tempered glass by lifting it from the lugs on the sides.see (Fig.1)

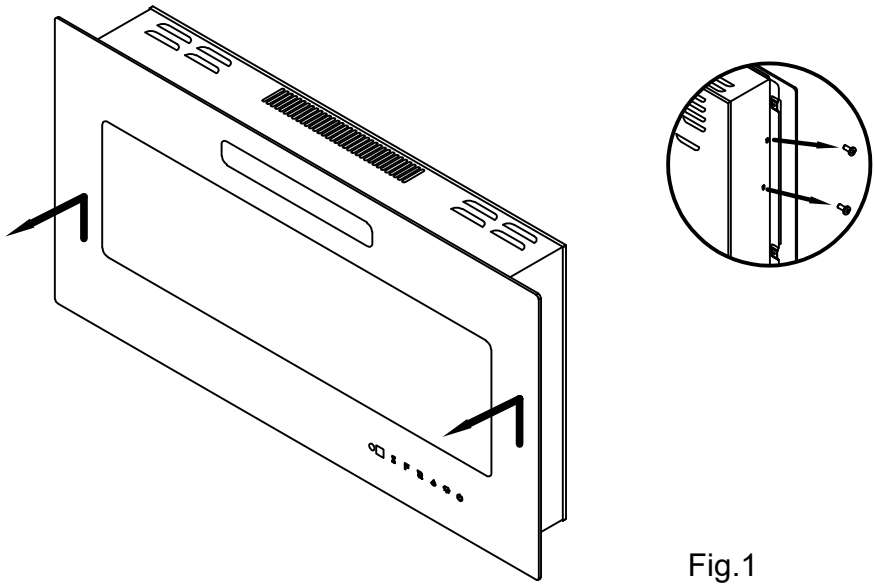

Fig.1

- With the help of an adult assistant, lift the fireplace and gently slide it into the opening in the mantel. Make sure the fireplace is centered left and right in the opening. Be careful when placing fireplace and adjusting, bottom of fireplace could scratch the finish of the base/hearth of your wood mantel.(Fig.2)

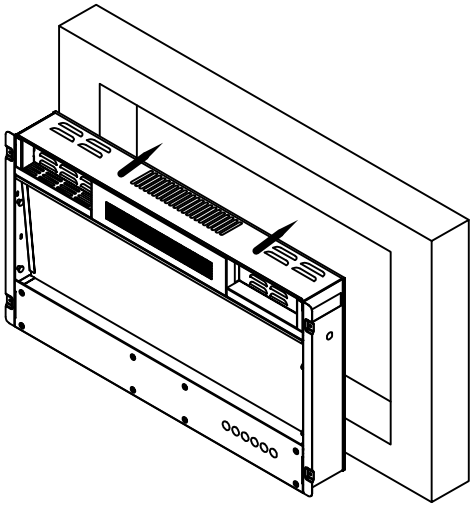

Fig.2

- For best viewing, mark the left and right screws (where the mantel is fixed according to the hole in the fireplace).(Fig.3)

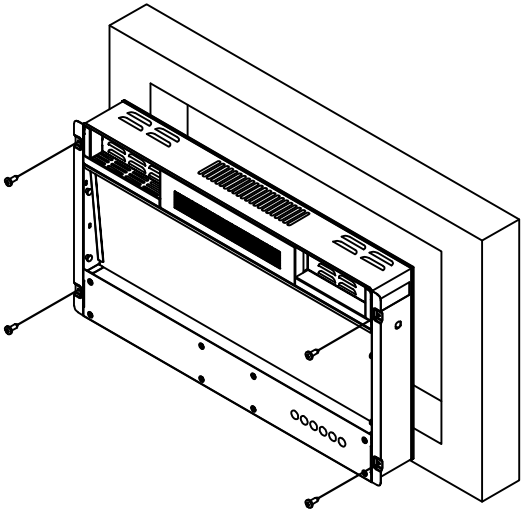

Fig.3

- Place decorative crystals inside the fireplace.
- Place the front glass surround over the front of the fire aligning the slots in the bracket at each side of the glass panel with the lugs on the sides of the fire ; See (Fig.4)
- Again,two people will be required for this operation.

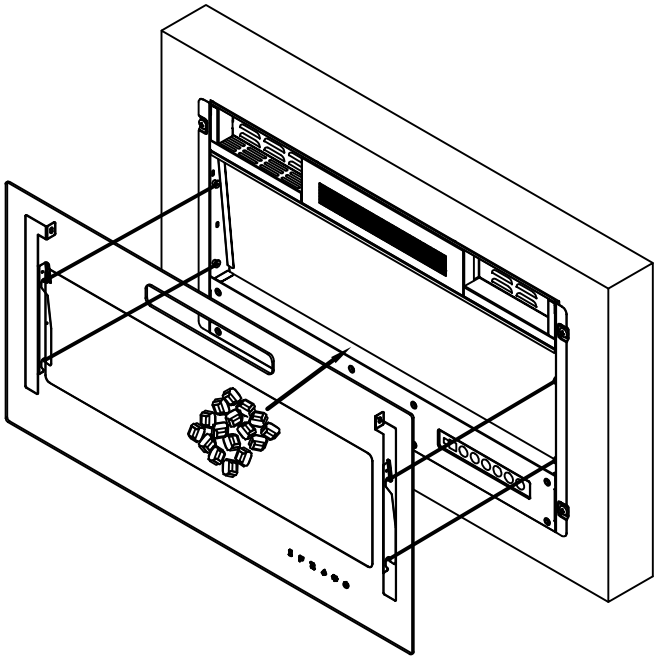

Fig.4

- Connect the LED lights with the power cables.(Fig.5)

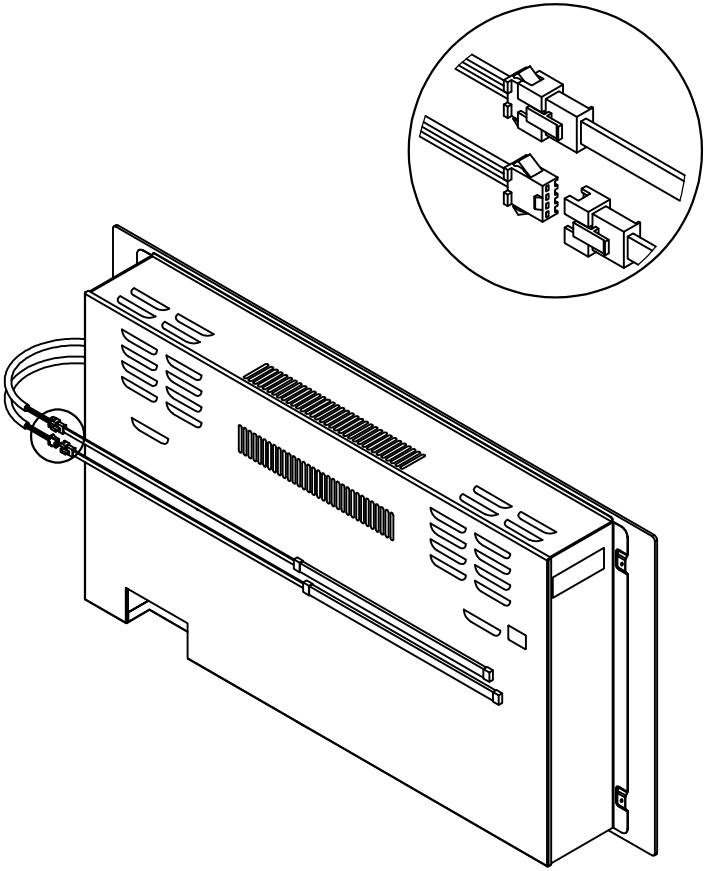

Fig.5

Instructions for Use

- The appliance can be operated either by the switches located on the top right hand side of the fire or by supplied remote control.

TO ACCESS CONTROL PANEL

- The standby switch located at the center right hand side of the fire must be first switch on.

Infrared Remote control

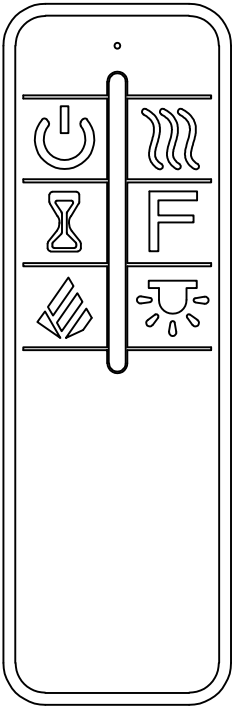

BUTTON	FUNCTION
POWER	ON:Enables control panel functions and remote control.Turn on flame effect OFF:Disables control panel functions and remote control.Turn off flame effect
FLAME	COLOR button:Makes the color flame effect changing. 1.Press once.Flame color effect gets changing. Press again until desired setting is reached. 2.Keep press 3 seconds Makes flame effect dimmer and brighter.
HEATER	HEATER button:Turn heater on and off NOTE:To prevent overheating,the heater fan will blow out cool air for 30 seconds after the heater turn off 1.Press once.Indicator lights up.750W heater turns on and blows warm air 2.Press again.Indicator lights up.1500Wheaters turns on and blows hot air 3.Press again.Heaters turn off. The fan blows cool air for 30 seconds to allow heater to cool down,then turns off.
TEMP	1.TEMPERATURE button:Control temperature settings to choose temperature as desired.Setting range from 62F to 82F.Press once.Indicator light turn on. Temperature is set to 62F.21Settings: (62F,63F,64F,65F66F,67F,68F,69F,70F,71E,72F,73F,74F,75F,76F,77E,78E,79F,80F,8IF,82F)
COLOR	1.LED backlight button:Turn on LED backlight and change color NOTE:This button only on remote
IIMER	TIMER button:Control timer settings to turn off fireplace at selected time. 8 Settings range 1H,2H,3H,4H,5H,6H,7H,8House. 2.Keep press 3 seconds to control LED backlight.

BATTERY REPLACEMENT

The battery compartment is located on the back end of the remote control.
1. Press and slide the battery cover open.
2. Insert two 1.5V (AAA) batteries ensuring they are installed correctly with regard to the polarities (+ and -) marked on the inside of the battery compartment.
3. Replace the battery cover.
NOTE: The batteries should be removed if the product is to be left unused for a long time.

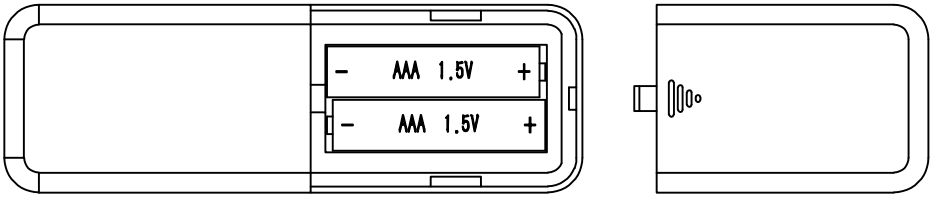

DO NOT mix old and new batteries.
DO NOT use rechargeable silver oxide cell batteries with remote control unit.
DO NOT mix alkaline.Standard (Carbon-zine).Or rechargeable(Nickle -Cadmium)

batteries.
DO NOT dispose of batteries in fie Improper disposal may cause batteries to leak or explode.

Important Safety Instructions

When using this electrical appliance,basic precautions should be followed to reduce the risk of fire,clectric shock,and injury to person,including the following :

- This heater must be used on an AC supply only and the voltage marked on the heater must correspond to the supply voltage.
- Do not switch the appliance on until it properly installed and described in this manual.
- Do not leave the appliance unattended during use.
- Do not leave the appliance unattended whilst connected to the mains supply.
- Keep out of reach of children and do not allow them to operate this appliance.
- From time to time,check the cord for damage Never use the appliance if the cord orany part of the appliance shows signs of damage.
- Do not operate this appliance with a damaged plug or cord,after a malfunction or after being dropped or damaged in any way.

FCC STATEMENT

This device complies with part 15 of the FCC Rules. Operation is subject to the following two condi-tions: (1) This device may not cause harmful interference, and (2) this device must accept any inter-ference received, including interference that may cause undesired operation. This equipment has been tested and found to comply with the limits for a Class B digital device, pursuant to part 15 of the FCC Rules. These limits are designed to provide reasonable protection against harmful interference in a residential installation. This equipment generates, uses and can radiate radio frequency energy and, if not installed and used in accordance with the instructions, may cause harmful interference to radio communications. However, there is no guarantee that inter-ference will not occur in a particular installation. If this equipment does cause harmful interference to radio or television reception, which can be determined by turning the equipment off and on, the user is encouraged to try to correct the interference by one or more of the following measures:

- Reorient or relocate the receiving antenna.
- Increase the separation between the equipment and receiver.
- Connect the equipment into an outlet on a circuit different from that to which the receiver is con-nected.
- Consult the dealer or an experienced radio/TV technician for help.

- Repairs to electrical appliances should only be performed by a qualified electrician. Improper repairs may place the user at serious risk.
- Do not run the cable under carpets,rugs etc.
- Do not allow the mains cable to hang over sharp edges or come into contact with hot surfaces.
- WARNING:In order to avoid overheating,do not cover or obstruct the heater in any way.
- Overheating will result if it is accidentally covered.
- Never immerse the product in water or any other liquids.

LED Bulb Replacement

Note:The flame effect on this electric fireplace insert is created by LED Bulbs.
The life of these LED bulbs will be 100,000hours.The users are not recommended to Replace the LED Bulbs.For any reason should the bulbs stop working properly,contact a Qualified technician.

Cleaning:

- Turn heater OFF and unplug from electrical outlet before any cleaning or maintenance is performed.Wait at least 10minutes to allow all components to cool properly.
- Use a vacuum or duster to keep heater and vent area clean from dust and dirt.
- The exterior of the fireplace should be cleaned with a damp cloth or duster. Do not use abrasive cleaners or liquid sprays.

WARNINGS AND CAUTIONS

WARNING To avoid electrical shock not open the back panel of the insert unless the Power has been turned off.And the insert has been unplugged.

WARNING Any electrical repairs.to this electric fireplace.Should only be Performed by a qualified Technician.

WARNING Any electrical wiring repairs should only be performed by a qualified Technician.And also must comply with local buildings codes.

WARNING Discontinue use of this electric fireplace if any of the follow has Occurred: Water damage.If insert has been or dented.If power cord has Become broken.If power cord becomes hot to touch,if unit smokes or Smells like smoke.

Note: When the heat functions is used for the first time.A slight odor may be Present.This is normal and should be occur again unless heater is not used For extended periods of time and dust is allowed to accumulate on heater Element

Meaning of crossed -out wheeled dustbin:
Do not dispose of electrical appliances as unsorted municipal waste,use separate collection facilities.

Safety Cut-Off

- This appliance is fitted with a safety cut-off which will operate if the fire overheats (e.g.due to blocked air vents).For safety reasons,the fire will NOT automatically reset.

- To reset the appliance,disconnect the appliance from the mains supply for at least 15 minutes.Reconnect the supply to the mains and switch on the appliance.

Troubleshooting

Symptom	Solution
No operation/no fan	Check fuse by replacement, Check for safety cut-off operation,
No fire effect light	Check the LED light with technician.

Meaning of crossed -out wheeled dustbin:
Do not dispose of electrical appliances as unsorted municipal waste,use separate collection facilities.
Contact you local government for information regarding the collection systems available.
If electrical appliances are disposed of in landfills or dumps,hazardous substances can leak into the groundwater and get into the food chain,damaging your health and well-being.
When replacing old appliances with new ones,the retailer is legally obligated to take back your old appliance for disposals at least free of charge.