SKU:WF321487

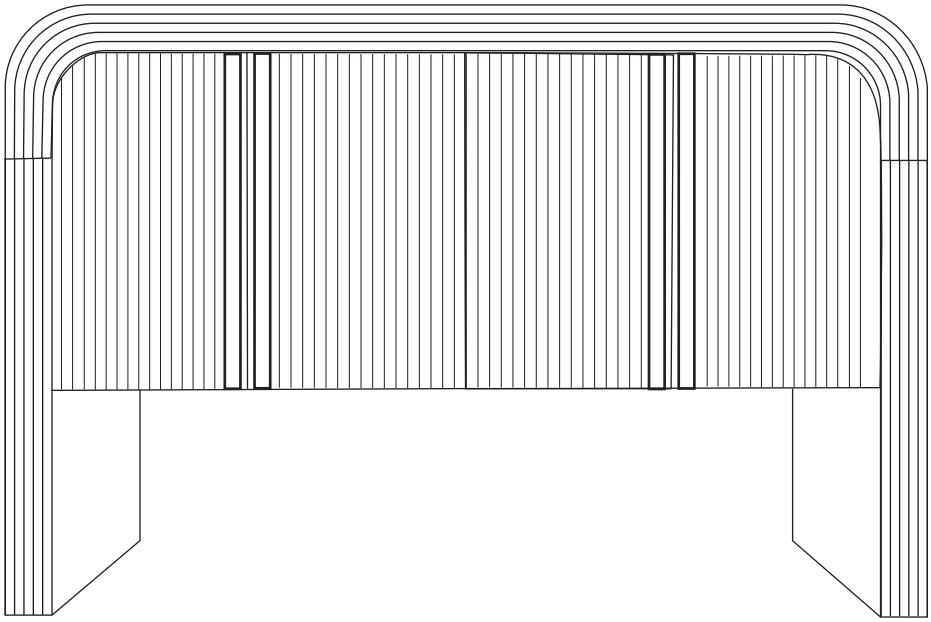

1.Note:This is not clothing storage cabinet and it is not recommended to use it as a clothing storage cabinet.
2.All cabinets come with TRO,stainless steel or our “L-Bracket” when shipped.

1. Thank you for choosing ***our products.***

2. Return Policy

DO NOT RETURN TO THE STORE! Skip the process of returning your product and contact us directly for a replacement

If you find that parts of your order are missing or damaged, we will gladly ship any needed replacement parts free of charge.

If your product's quality does not meet your expectations or you have found any sort of defect, please contact our customer service department and let us know the details of your order and any issues encountered, we will try our best to provide you with a solution. Feel free to also directly contact our manufacturer concerning needed replacement parts and they will be happy to help provide you with a solution or answer any questions you may have.

Recommendations Before Beginning Assembly

• Read instructions, cover to cover

• Have 2-4 adults on hand for assembly depending on product size

• Do not assemble directly on flooring or carpet

• Assemble on a clean non-marring surface (example: packing foam)

• Save all packaging until finished

3. Assembly Notice:

- If you encounter any problems during assembly and find that you cannot continue, rest assured we will help you solve the situation as soon as possible. Simply keep all of the parts of the product stored in a safe place and contact us immediately so we may assist you further.
- Once you have opened your package, remove all inner hardware packages and take the parts out. One by one, Place the parts out neatly in front of you, then refer to the instructions to ensure no parts are missing. If any pieces are found missing, please carefully look in the box first, as the hardware packaging might have torn making the

hardware spill in the box.

- Some key parts of your product may be stored and hidden inside of other parts. Please open any zippered or hook & loop storage compartments to remove all parts. (example: cushions and legs being stored in the underside of a sofa)
- IMPORTANT: When setting up your product, DO NOT INSTALL THE SCREWS ALL THE WAY IN THE BEGINNING. Place each screw into their proper hole and use your hand to twist the screw halfway. Twist all the screws in halfway to ensure the holes will match up properly and the product is level on the ground. When everything seems fitted, then tighten the screws.
- When you have completed assembly, we suggest you have more than one person to assist you with lifting and placing the product.

Care & Maintenance

- Do not put hot items directly on furniture surface
- Do not clean furniture with harsh cleansers or polish
- Do not place furniture under direct sunlight
- Do not place furniture near heating or cooling vents
- Do not write on furniture without a padded barrier to protect the surface
- Do not place furniture outside. For indoor use only
- Not for commercial use. For residential use only
- Stains may be removed with mild soap solution and damp cloth
- Children should not climb or jump on the furniture
- Dust and pick-up spills using a clean, non-colored, lint-free cloth

Caution

● This product contains small components. Please ensure that they are kept away from small children.

● Do not use power tools to assemble your furniture. Power tools may strip or damage the parts.

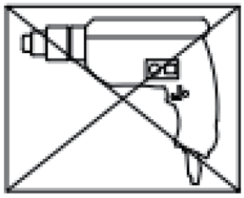

SKU:WF321487

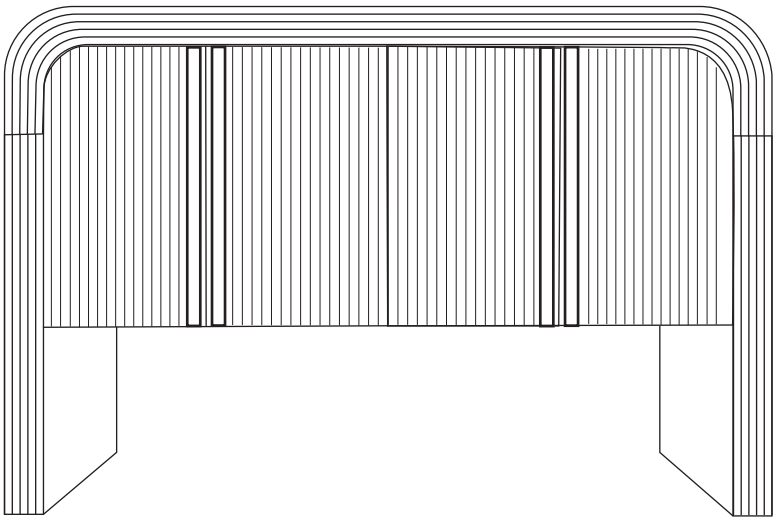

Part list

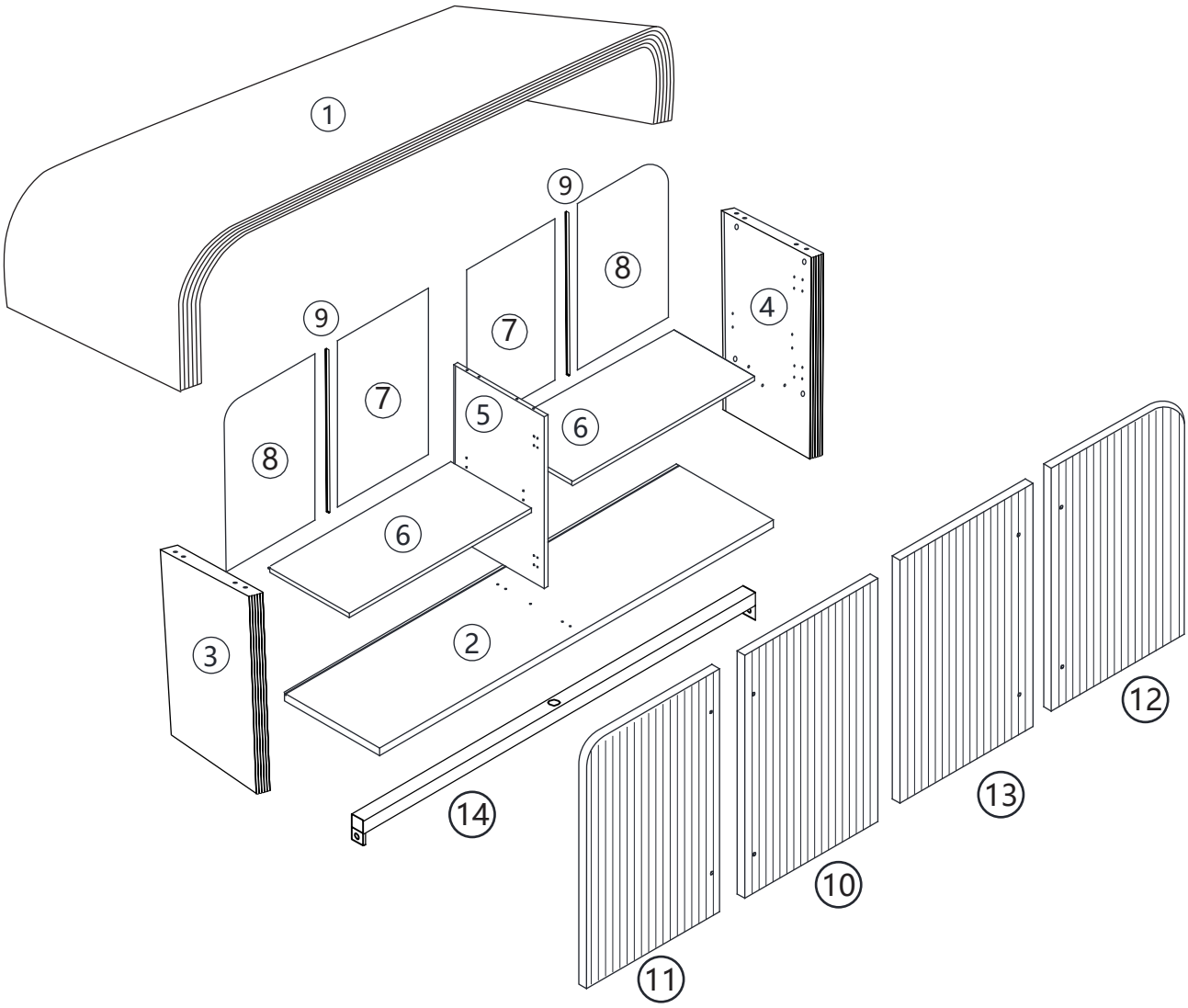

1

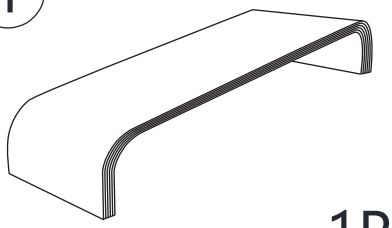

1PC

2

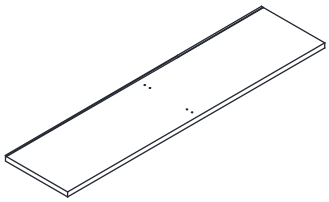

1PC

3

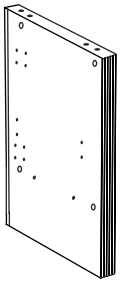

1PC

4

1PC

5

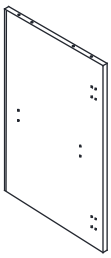

1PC

6

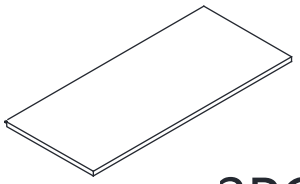

2PCS

7

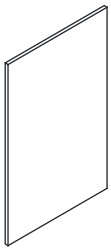

2PCS

8

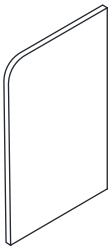

2PCS

9

2PCS

10

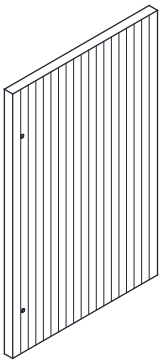

1PC

11

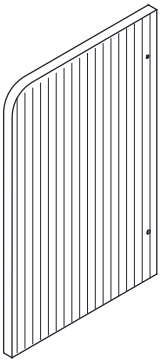

1PC

12

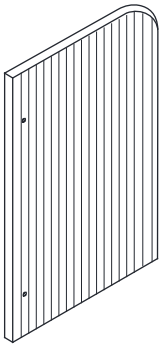

1PC

13

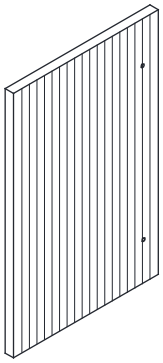

1PC

14

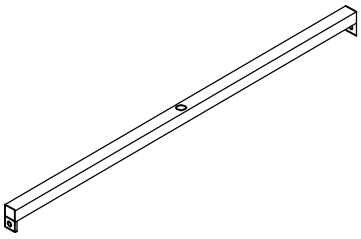

1PC

Ø6x35mm	Ø15x12mm	Ø6x30mm	Ø5x45mm	
AX11	BX11	CX12	DX3	EX1
	Ø3x14mm			Ø6x30mm
FX8	GX8	HX8	IX4	JX8
		Ø4x14mm	N1 ×2 N2 N3 N4 N5	
KX4	LX4	MX48	NX2	
Ø6x20mm				
OX2	PX1			

STEP 1

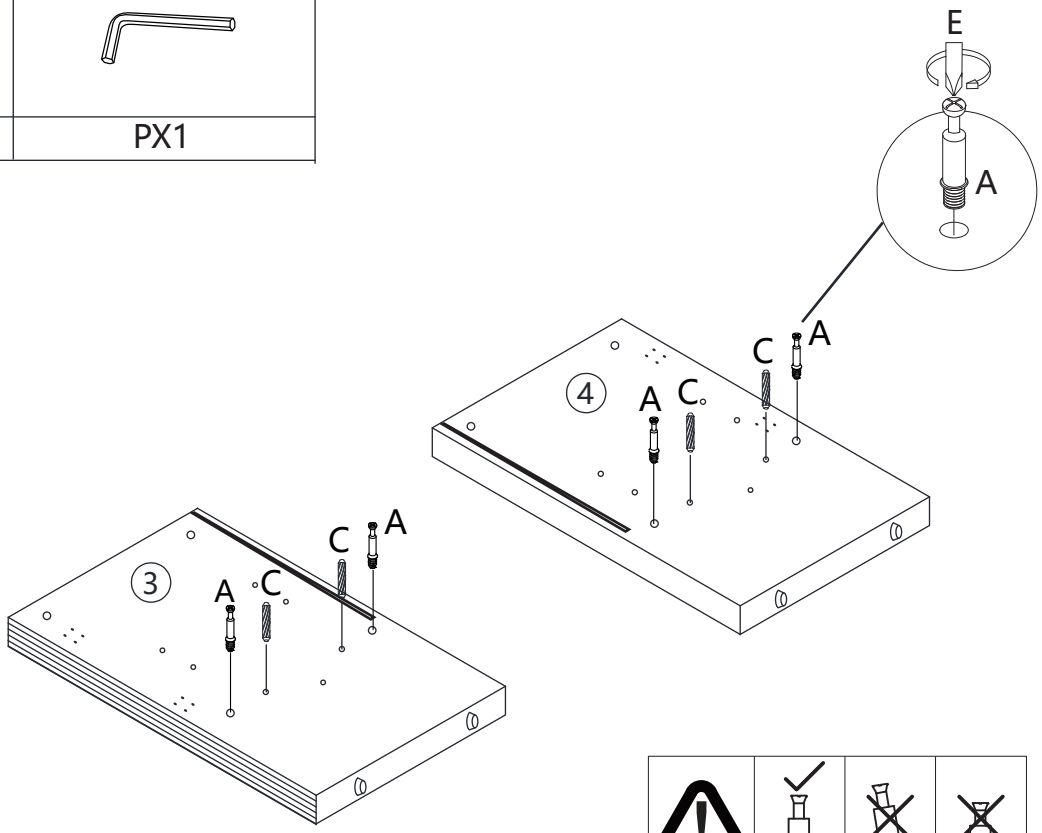

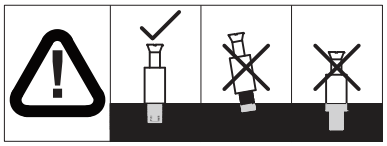

	Ø6x30mm	
AX4	CX4	EX1

STEP 2

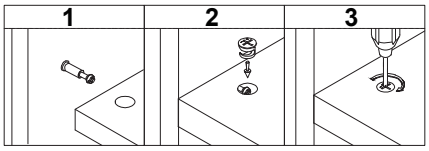

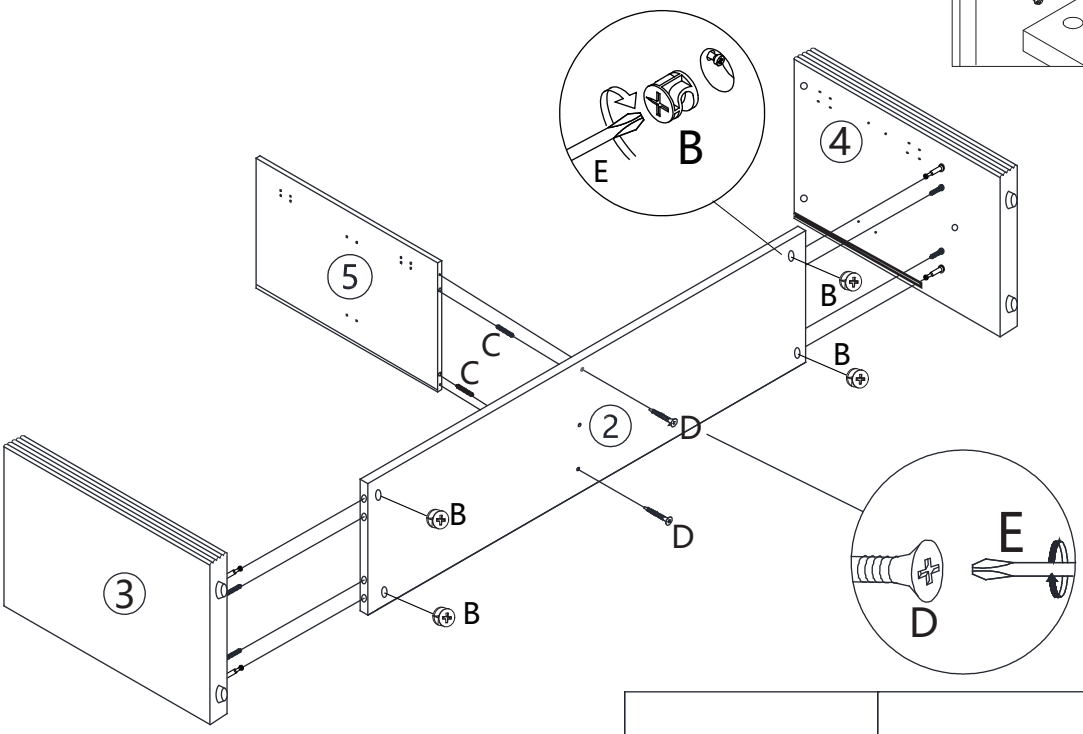

Ø15x12mm	Ø6x30mm	Ø5x45mm
BX4	CX2	DX2

STEP 3

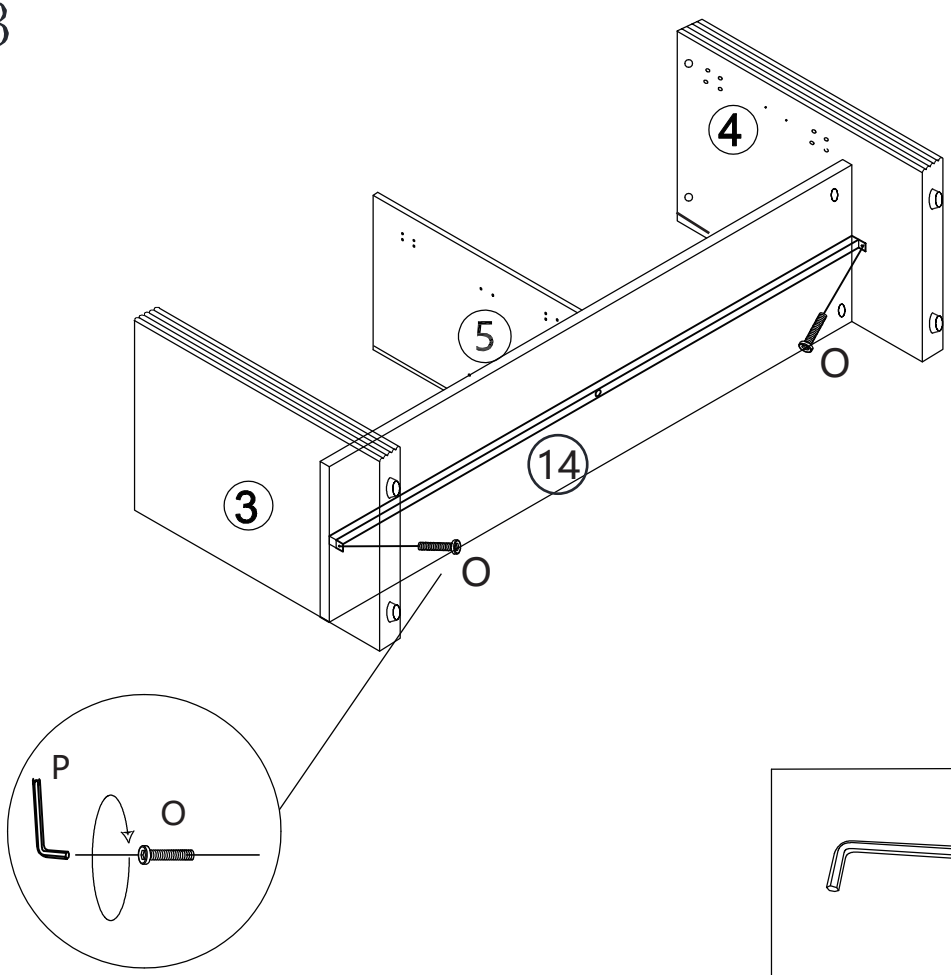

	Ø6x20mm
P×1	O×2

STEP 4

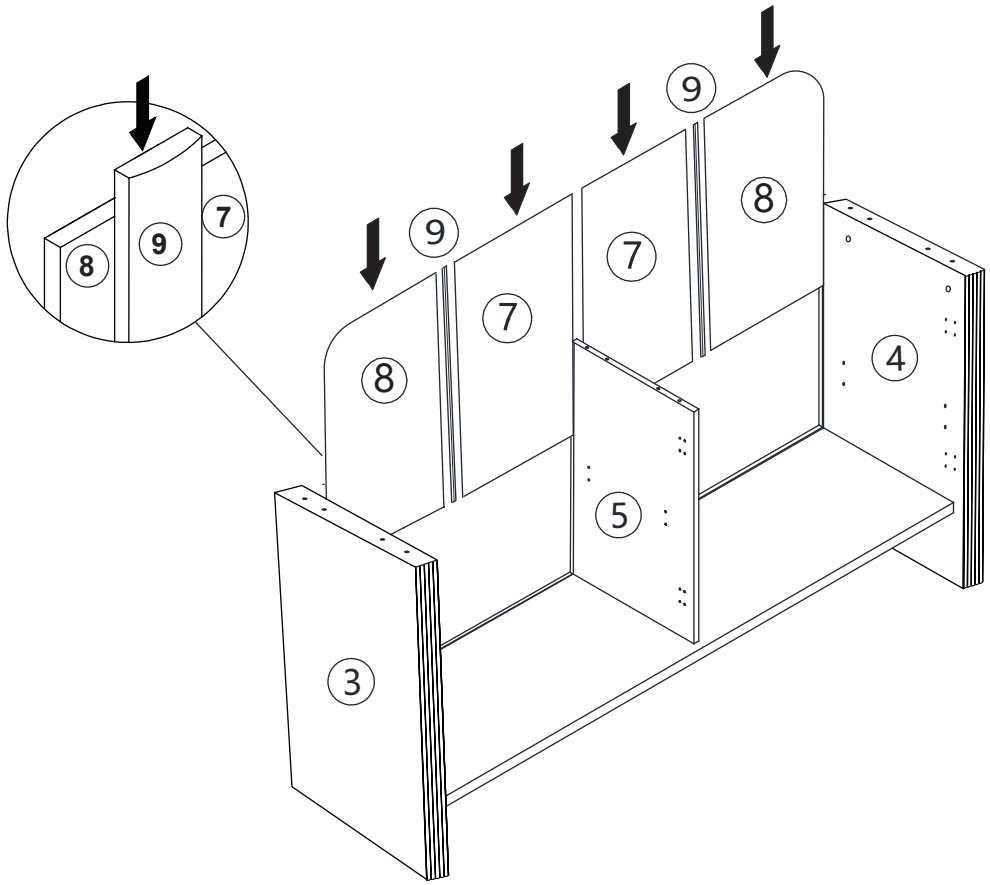

STEP 5

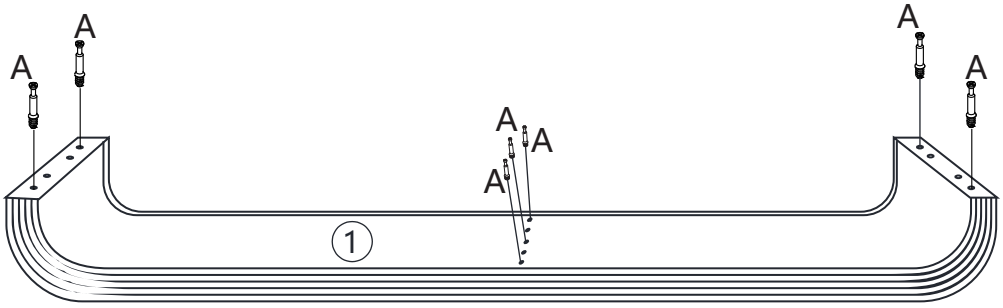

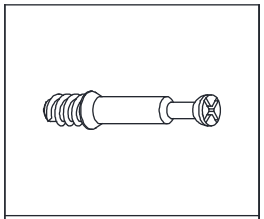

AX7

STEP 6

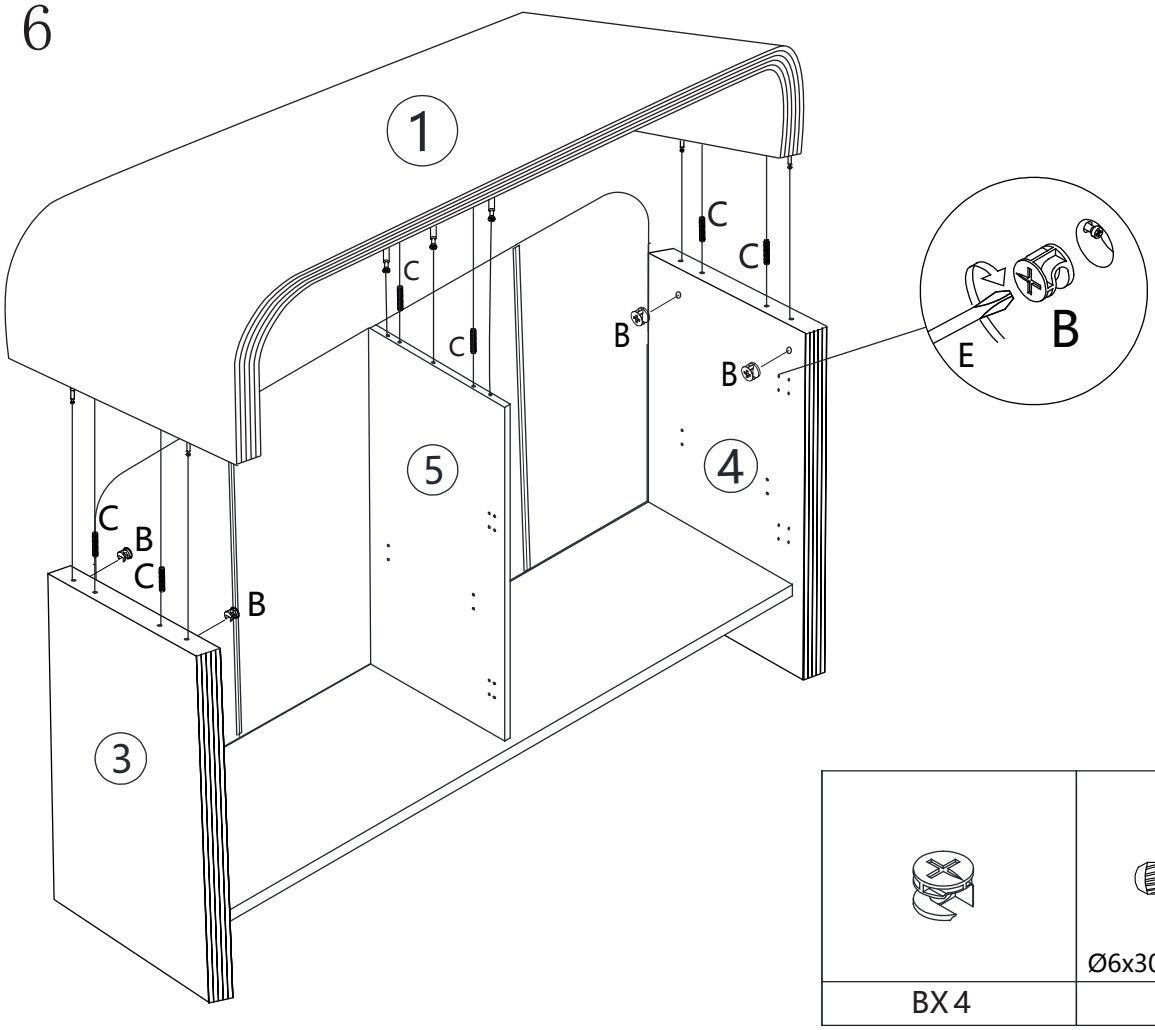

	Ø6x30mm
BX 4	CX6

STEP 7

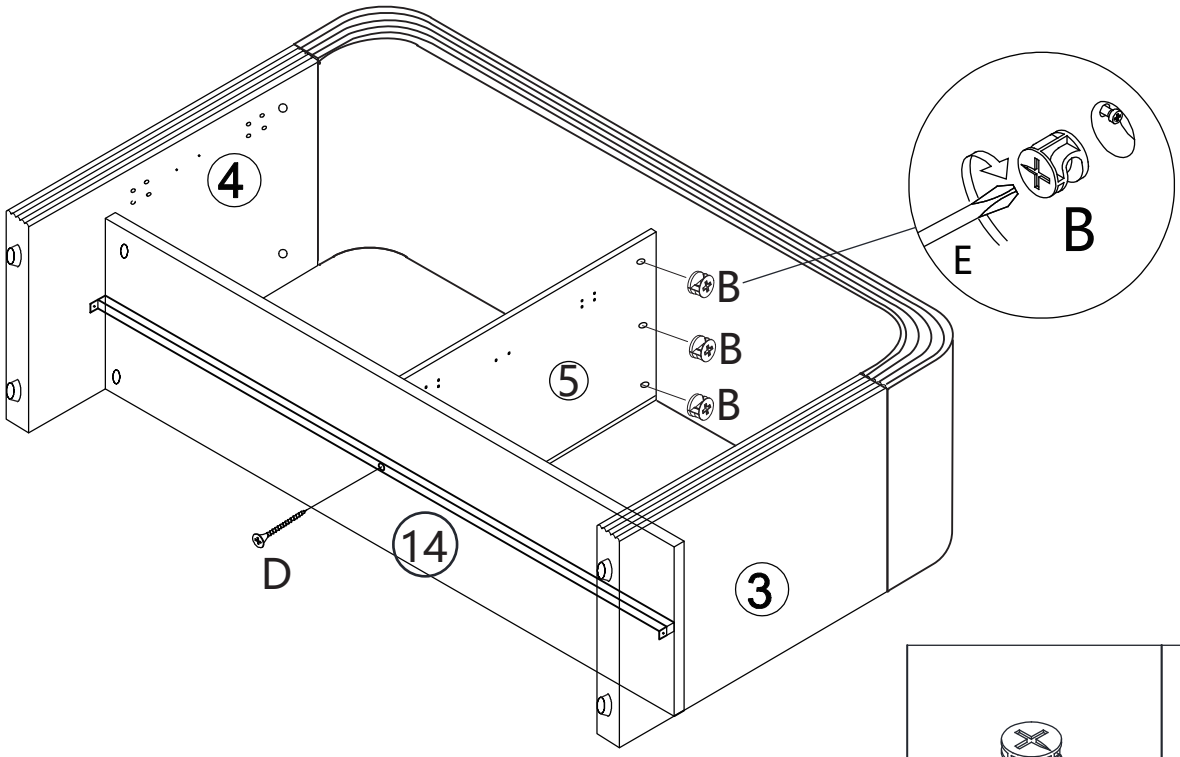

	Ø5x45mm
B×3	D×1

STEP 8

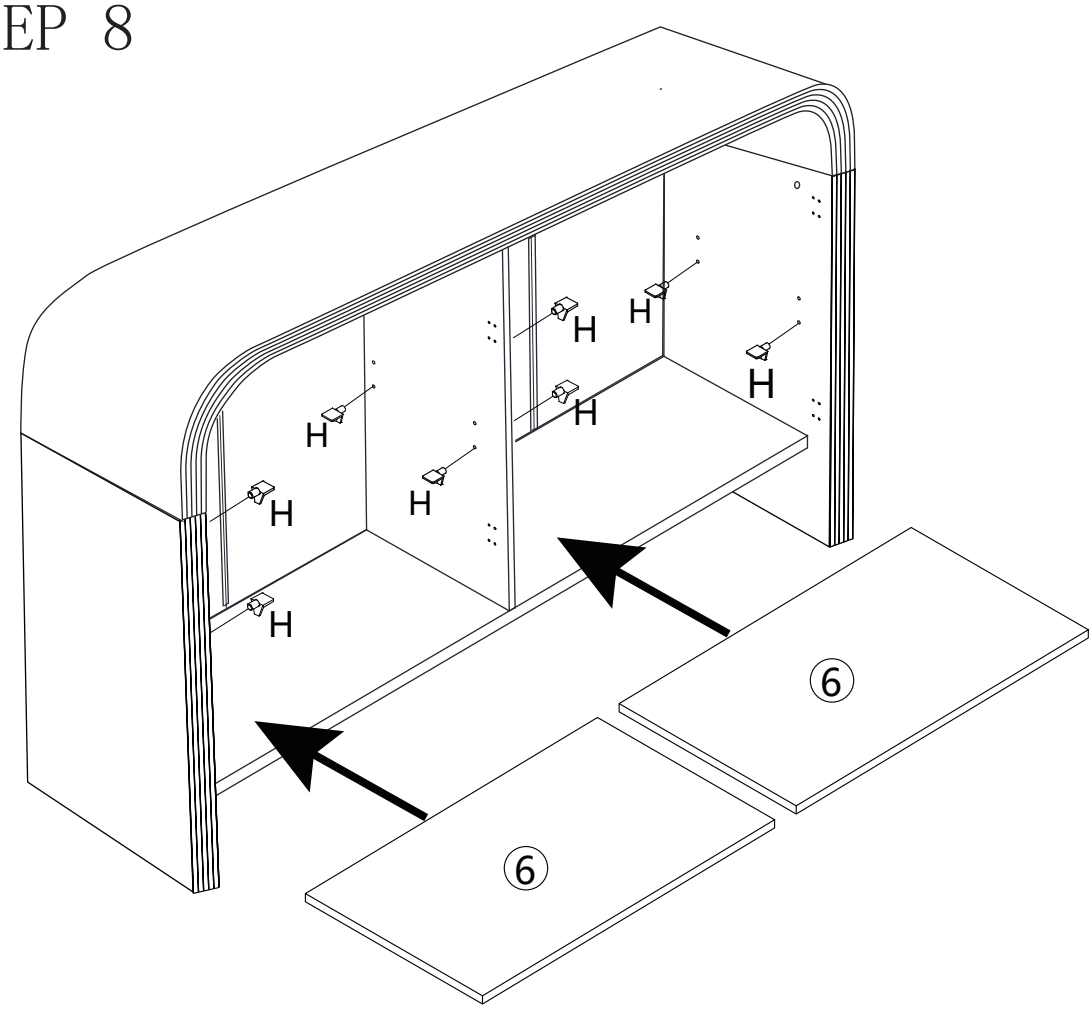

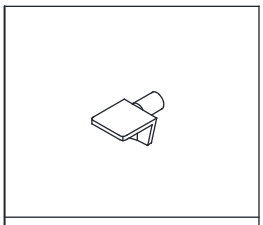

STEP 9

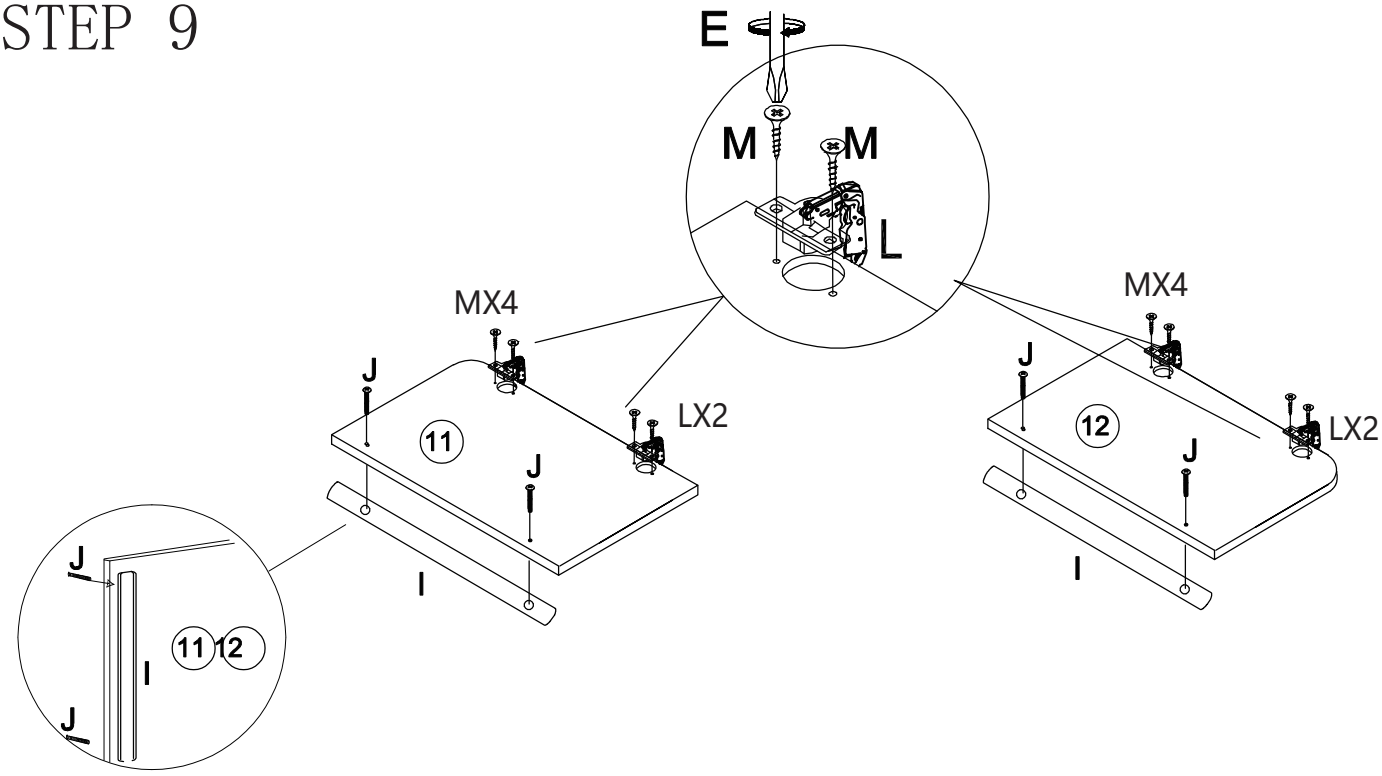

	Ø6x30mm	Ø4X14mm	
IX2	JX4	MX8	LX4

STEP 10

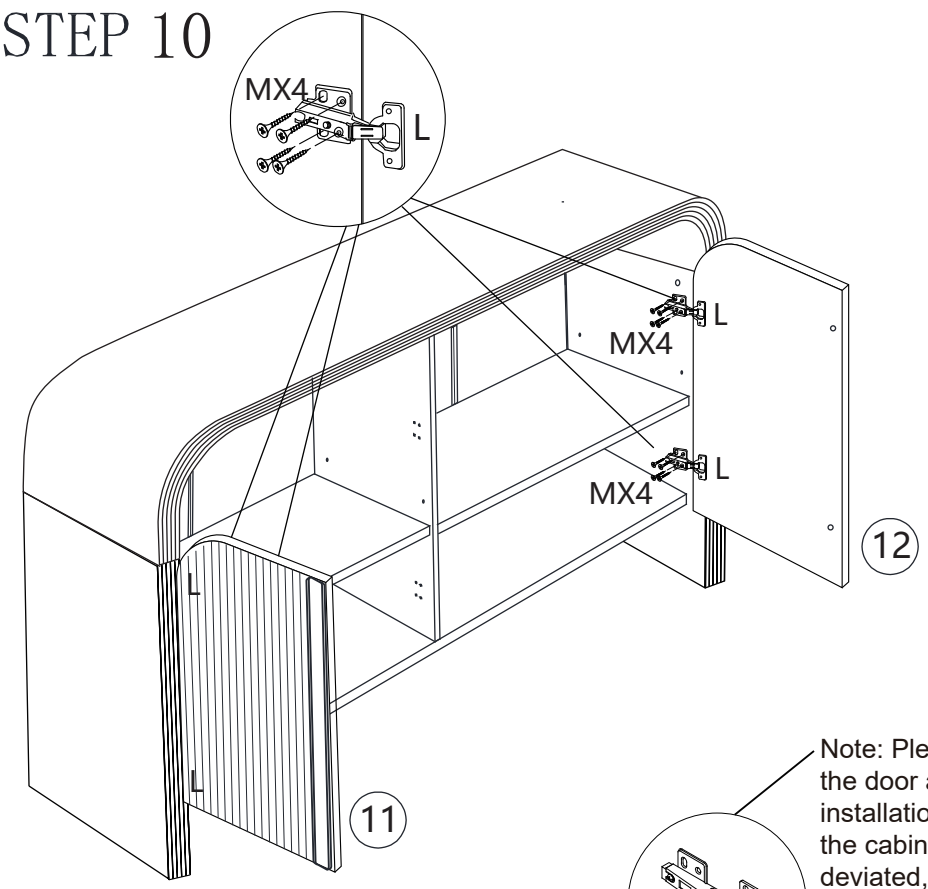

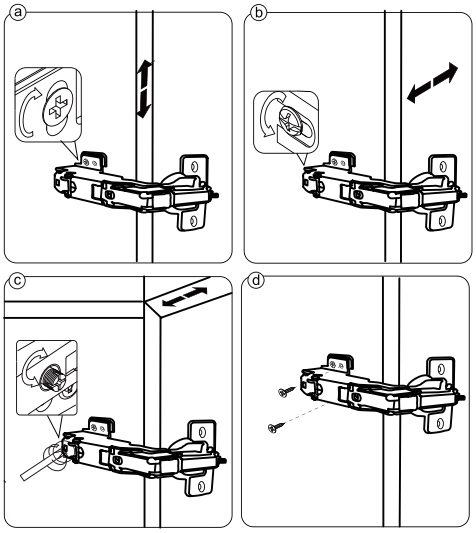

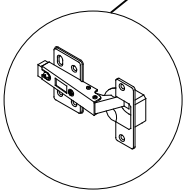

Note: Please assemble the door according to the installation steps first. If the cabinet door is deviated, the internal hinge needs to be slowly adjusted to solve the problem.

Ø4x14mm	
MX16	

STEP 11

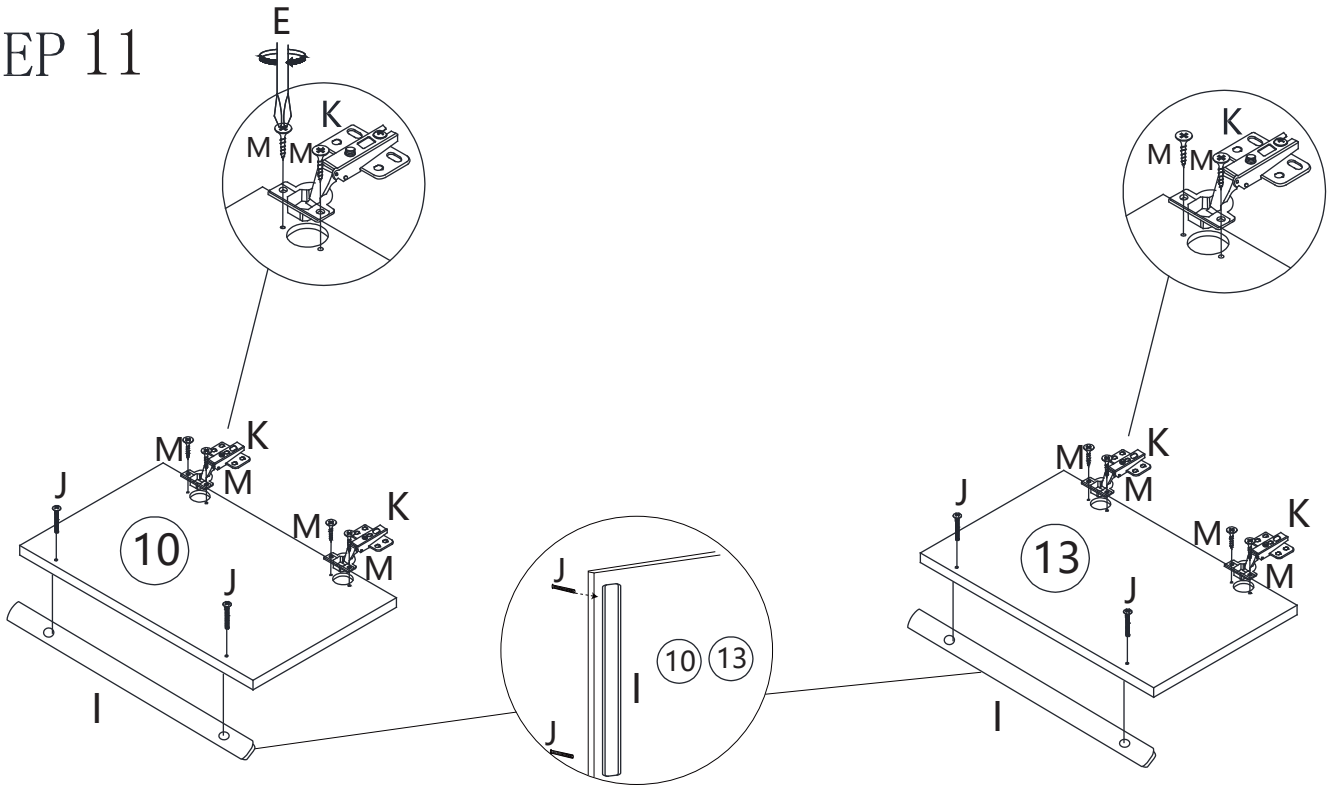

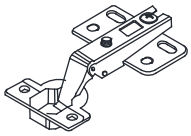	Ø 4x14mm		Ø4x22mm
KX4	MX8	IX2	JX4

STEP 12

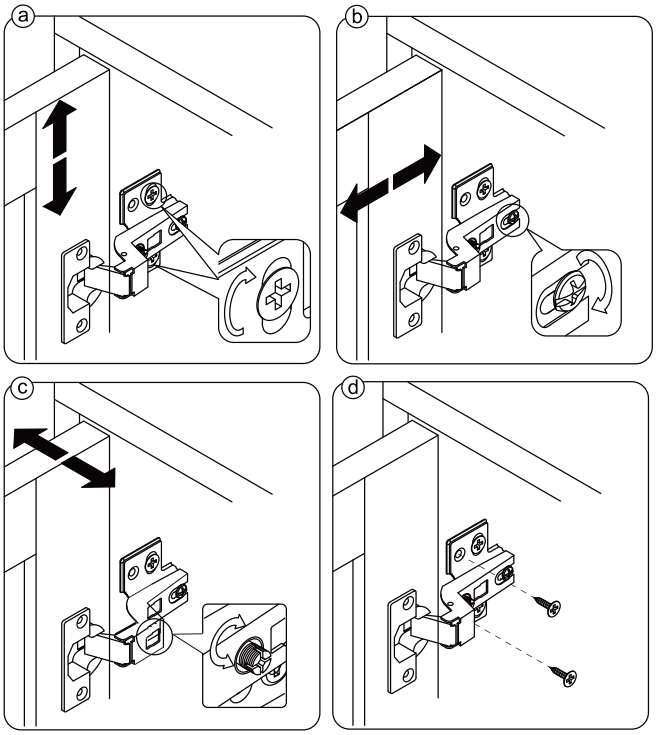

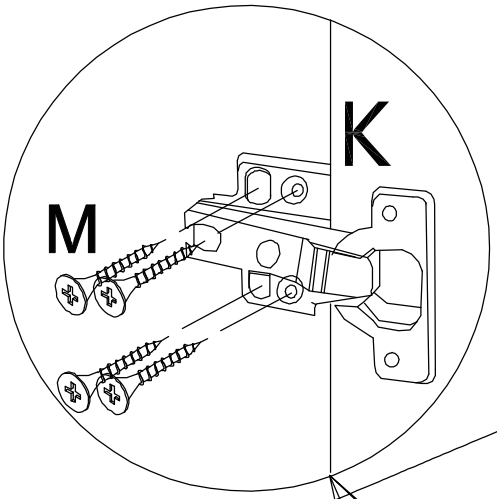

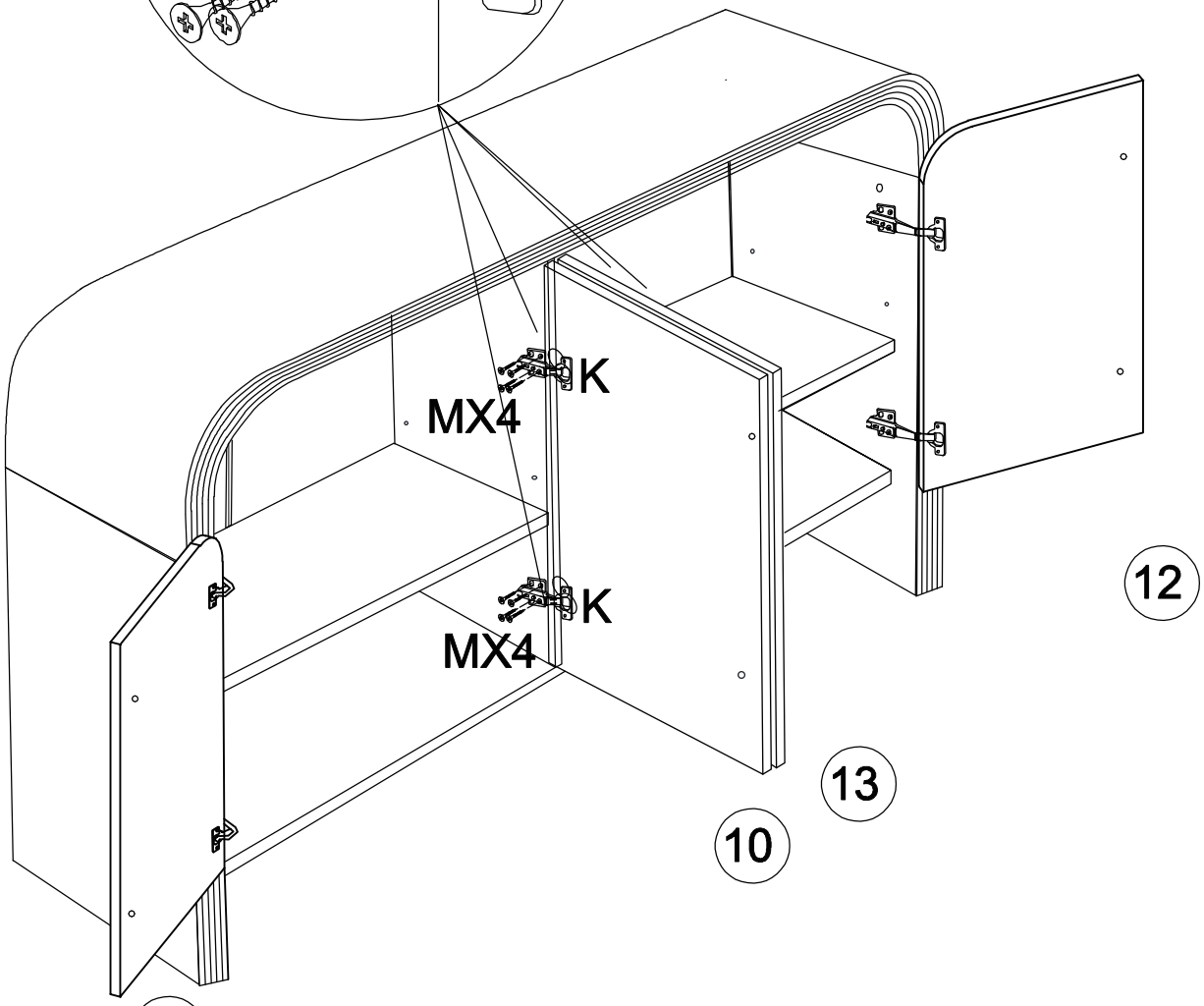

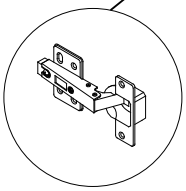

Note: Please assemble the door according to the installation steps first. If the cabinet door is deviated, the internal hinge needs to be slowly adjusted to solve the problem.

Ø4x14mm

MX16

STEP 13

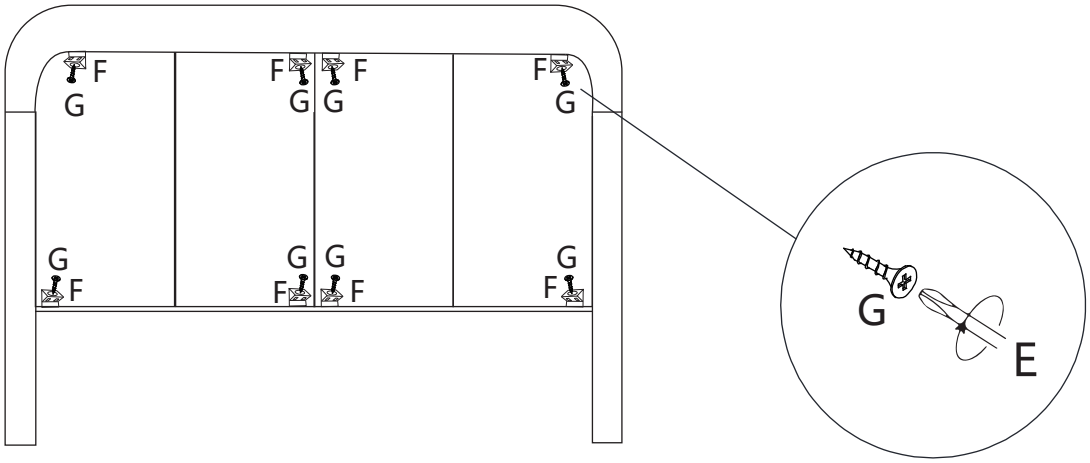

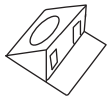	Ø3x14mm
FX8	GX8

STEP 14

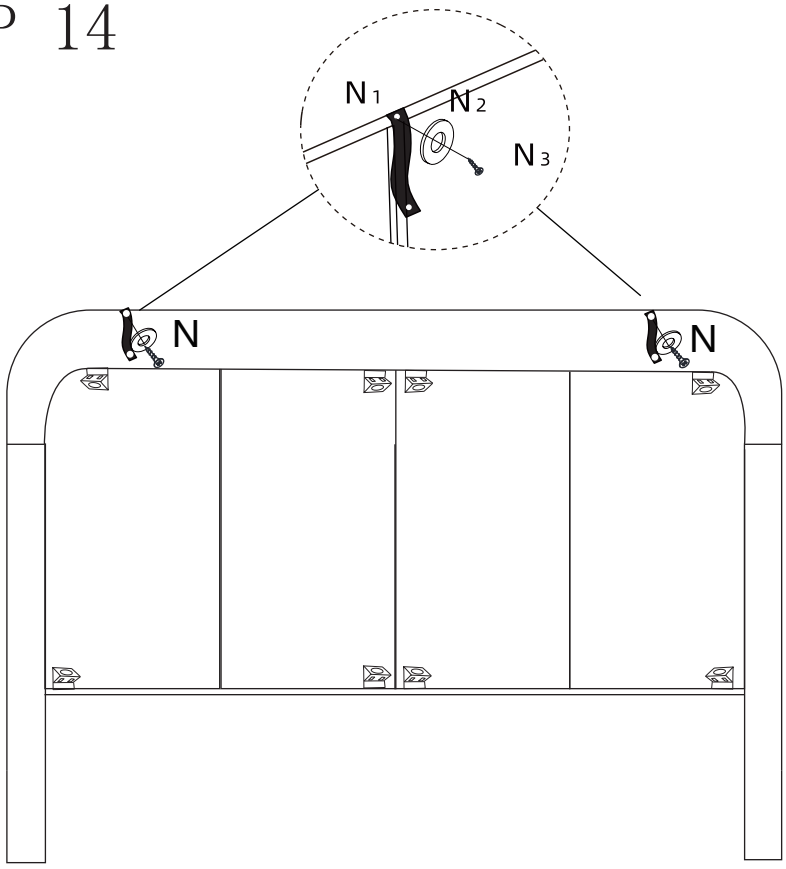

N1	N2	N3
NX2		

STEP 15

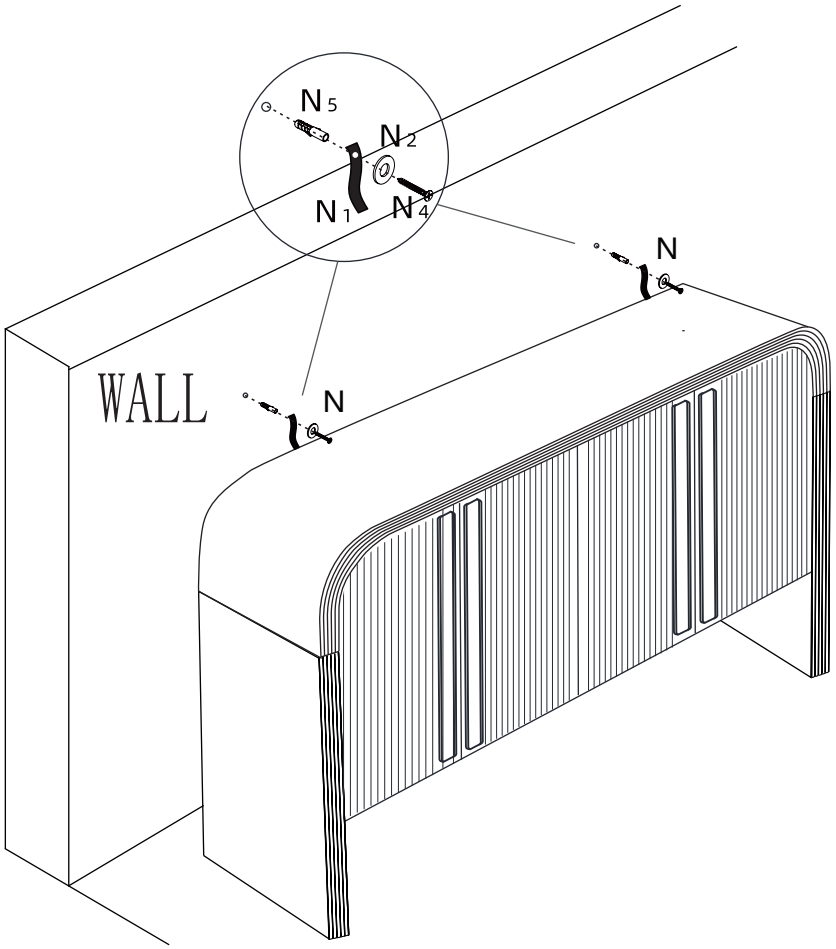

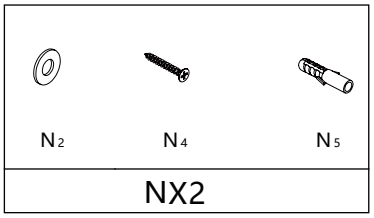

Assembly Steps(EN) / Montageschritte(DE)

HOW TO ADJUST THE HINGES TO
ALIGN THE DOORS IF NEEDED.

STEP 1

Open the door.

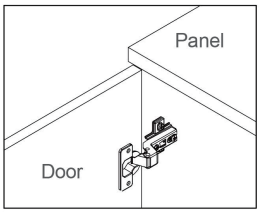

STEP 2

Adjust the door panelsupward or downward

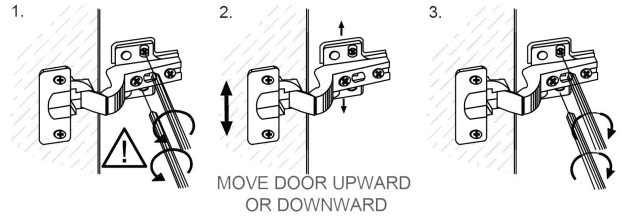

Unscrew 2 screws in round holes loosen 2 screws in oval holes a bit.

Tighten 2 screws in oval holes. Screw in 2 screws in round holes

STEP 3

Adjust the flush between door panel and side panel

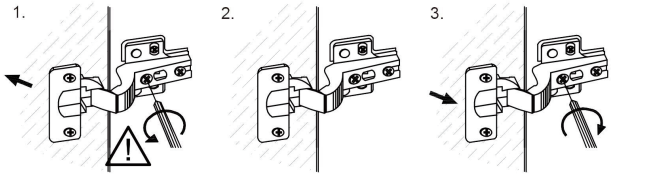

MOVE DOOR OUTWARD by turning this screw counter-clockwise

KEEP DOOR IN RIGHT POSITION

MOVE DOOR OUTWARD by turning this screw clockwise

STEP 4

Adjust the Gap beteen door panel and side panel

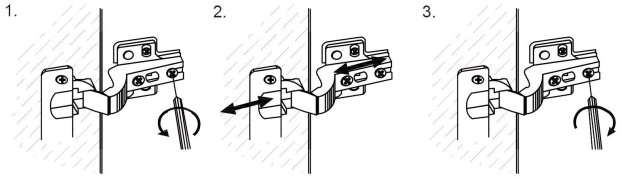

Loosen this screw a bit.

MOVE DOOR BACK OR FORTH

Re-tighten this screw.