ASSEMBLY INSTRUCTION

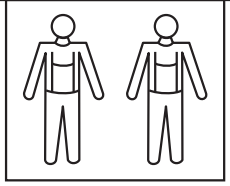

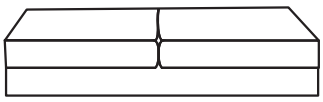

A*1

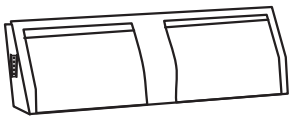

B*1

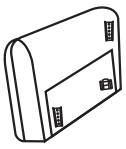

C*1LEFT

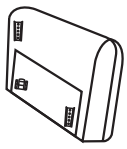

C*1RIGHT

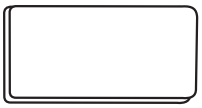

D*2



E*2



F*2



G*2



H*1

I*2



J*4

STEP1

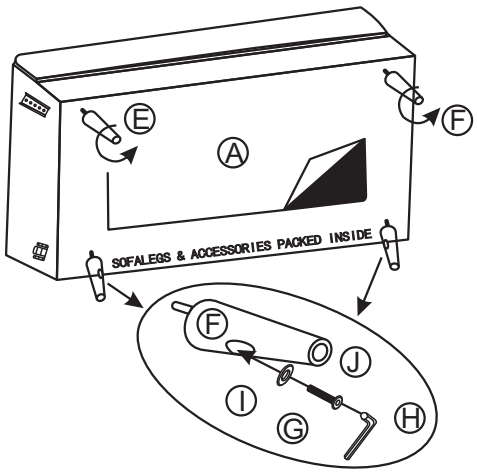

STEP2

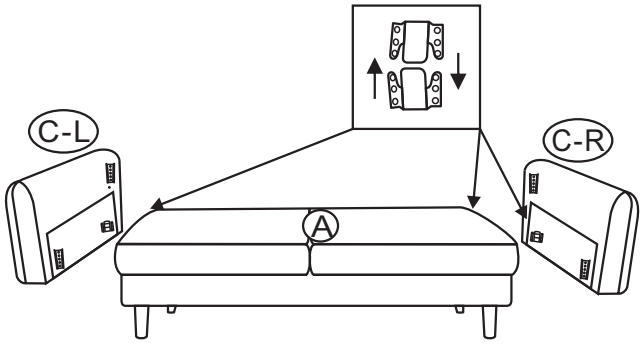

STEP3

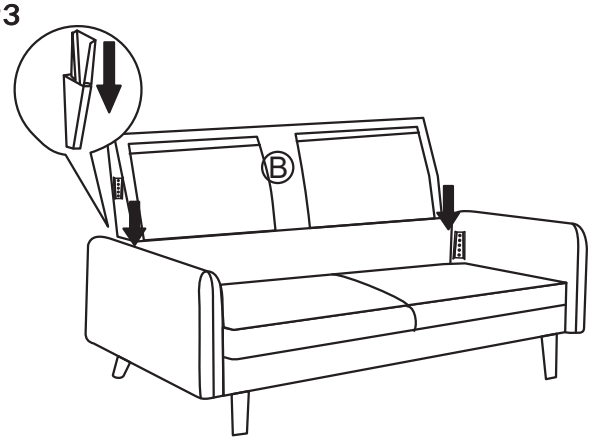

STEP4

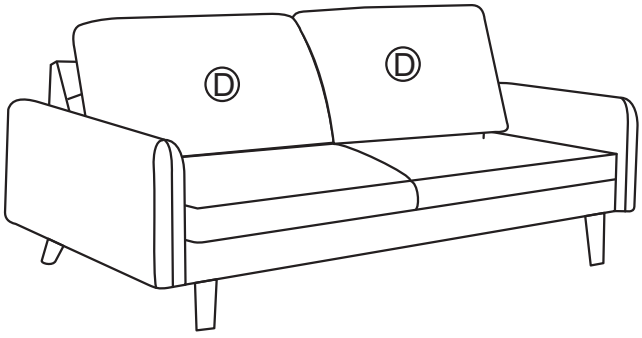

KINDLY REMINDER

D*2 、 E*2 、 F*2 、 G*2 、 H*1 、 I*2、 J*4
PACKED IN LOVESEAT

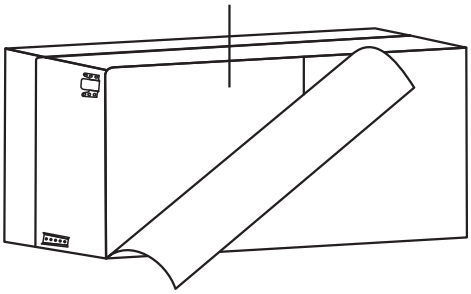

CAREFULY UNPACK AND PLACE THE LOVESEAT BODY(A) ON A CLEAN FLAT SURFACE TO SHOW THE BASE AS SHOWN.
UNPACK PARTS FROM THE STORAGE COMPARTMENT