SPECIFICATIONS

PARMA™ SINGLE HANDLE LAVATORY FAUCET

Model

D225558

Description

- Ceramic disc valve
- 2 1/4" high spout, 5" spout length
- With metal touch down drain assembly
- Single hole mount with optional deck plate DA667229
- Laminar Flow
- 1.5gpm (5.7L/min) maximum flow rate @60 psi

Standards

GREEN UPC NSF/ANSI 372 Water Efficiency

- NSF/ANSI 372

MEETS ASME A112.18.1M/ A112.18.1

- ASME A112.18.1M/A112.18.1

- ADA Accessibility Guidelines for Buildings and Facilities - 309.4 Operation and Operable Parts

Warranty

Danze products are covered by a manufacturer's limited "lifetime" warranty for manufacturing defects.

Flow Rate

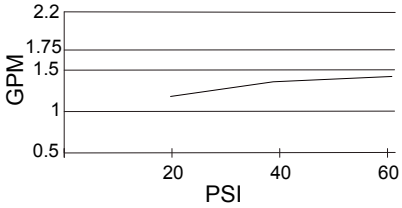

WaterSense Meets EPA Criteria
Certified by IAPMO R&T

Finishes Available

- Chrome
- Other: Refer to Price List for additional finish

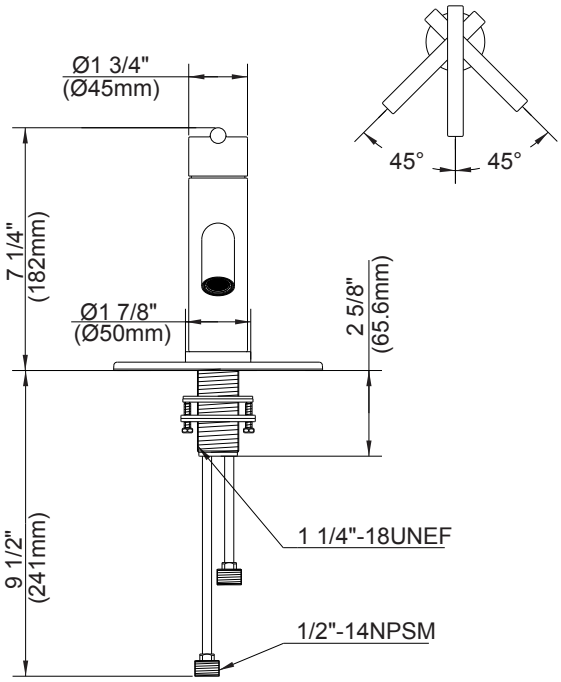

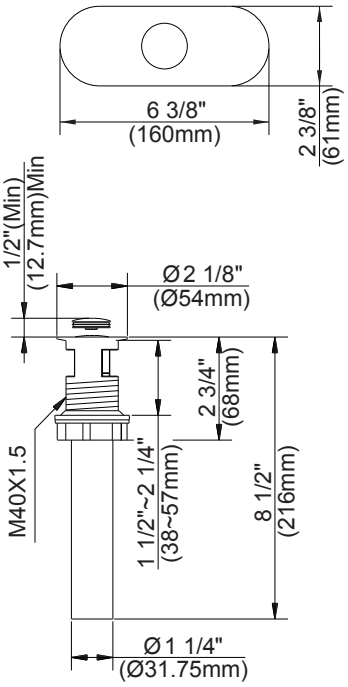

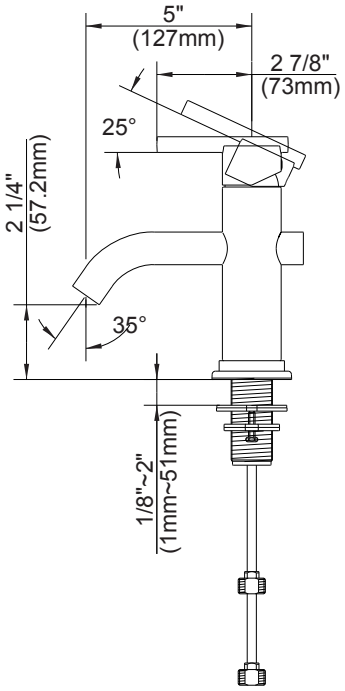

Submittal Information:

Job Name: _____ *Location:* _____

Contractor: _____ *Contact #:* _____