ROWLINSON GARDEN PRODUCTS

Potting Store

English SS291F

Assembly Instructions

Before assembly

- We recommend that time is taken to read the instructions before starting assembly, then follow the easy step by step guide. The instruction sheet is only a guide to the assembly. Certain items may not be shown to scale.
- Check all components prior to assembly
- This product should be assembled by no less than two people.
- Never attempt to erect the assembly in high winds.
- Drill components where indicated.
- Some of the components may have sharp edges wear protective work gloves while handling components.



Recommended tools for assembly

- Cross head screw driver
- Hammer
- Sharp knife
- Drill
- 3mm diameter drill bit
- 6mm diameter drill bit
- Spirit level
- Silicon sealant
- Step ladder
- prop

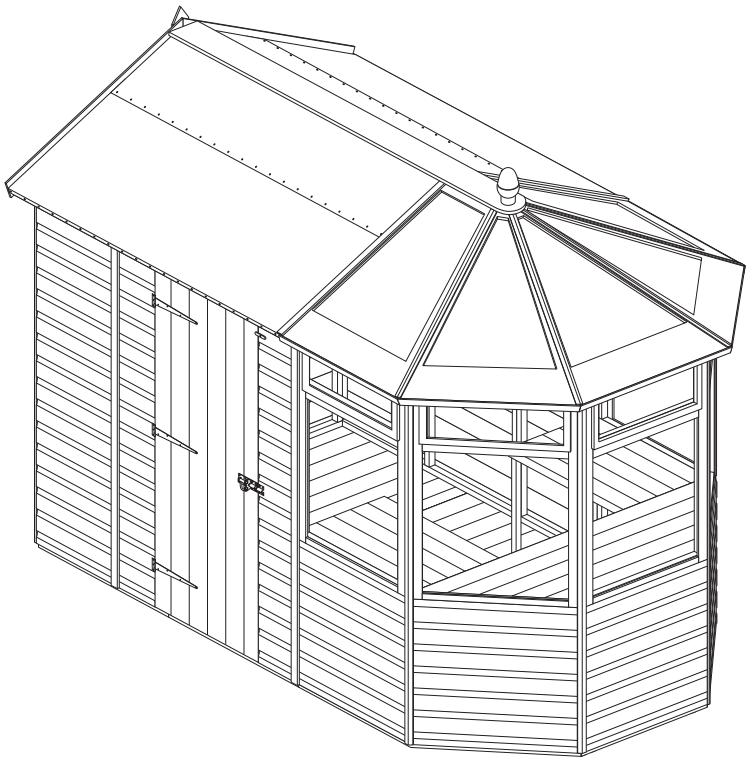

Footprint

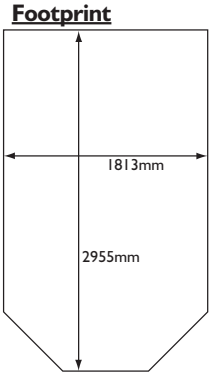

No.	Components	Qty.
1	Floor panel	2
2	Angled floor panel	1
3	Small back wall panel (1890x570mm)	1
4	Small side wall panel (1890x526mm)	2
5	Large wall panel (1890x1174mm)	2
6	Door panel	1
7	Right-hand window panel	1
8	Left-hand window panel	1
9	Window panel (Opening window)	3
10	Apex panel	1
11	Inside roof capping (170x2145mm)	1
12	Roof block (90x54x2100mm)	1
13	Left-hand rear roof panel	1
14	Right-hand rear roof panel	1
15	Mid roof panel	2
16	Left-hand glazed roof panel	1
17	Right-hand glazed roof panel	1
18	Triangular glazed roof panels	3
19	Roof felt roll (4m)	1
20	Roof felt roll (2m)	1
21	Outside roof capping (170x2210mm)	1
22	Acorn finial	1
23	Apex bargeboards	2
24	Roof felt to glass panel c/strip (35x12x1090mm)	2
25	Angled roof coverstrips (12x35x1160mm)	4
26	Door rebate strip (35x12x1718mm)	2
27	Door	1
28	Corner/joint coverstrips (48x12x1890mm)	7
29	Angled corner coverstrips (12x35x1910mm)	4
30	Potting table	1
31	Side potting table	2
32	Potting table legs (29x35x740mm)	4
33	Large window glazing (750x655mm)	5
34	Small window glazing (580x255mm)	5
35	Large window beading (12x30x728mm)	10
36	Large window beading (12x30x657mm)	10
37	Small window beading (15x15x257mm)	10
38	Small window beading (15x15x555mm)	10
39	Roof support rails	2
40	Window Frame	5
41	Special finial	1

No.	fixing Kit	Qty.
42	T-hinge (254mm)	3
43	Turn button	1
44	Pad bolt	1
45	Metal L-brackets	4
46	Window stay (black)	3
47	Cabinet hinge	6
48	50mm coach bolts	4
49	6mm washers	4
50	6mm nuts	4

No.	fixing Kit Continued	Qty.
51	63mm screws	47
52	50mm screws	107
53	40mm screws	22
54	25mm screws	68
55	25mm black screws	18
56	20mm screws	30
57	30mm nails	54
58	25mm nails	120
59	10mm felt nails	80

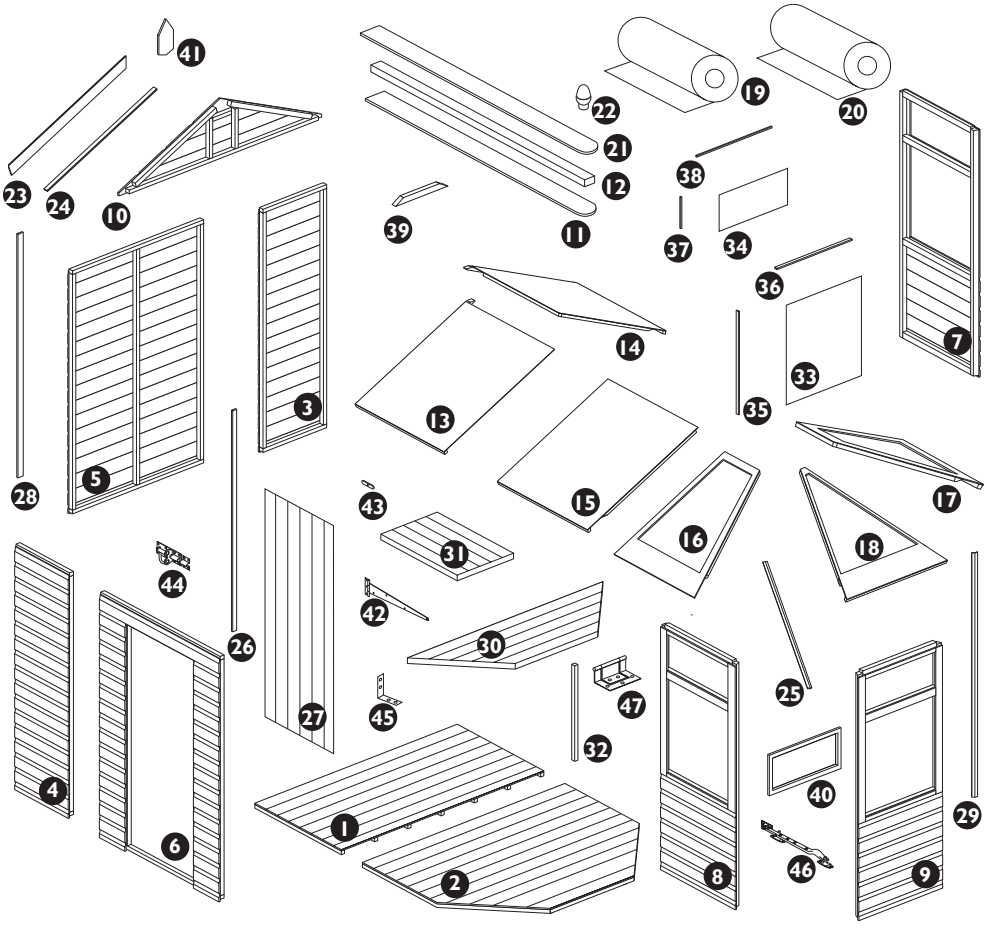

1. Floor panels

Prepare a level area for the shed to sit. Position the three floor panels together and check that the whole floor is sitting level.

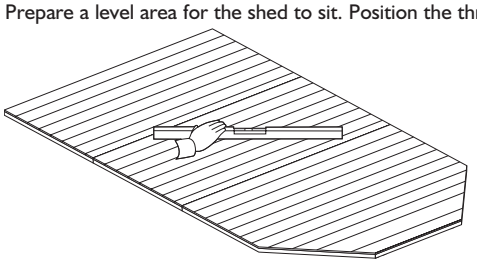

Important note

To "**VALIDATE**" the guarantee, adequate provision must be made to ensure ground contact is avoided and air is able to circulate underneath the building. Placing the building on a concrete pad or slab base is acceptable provided that the building is not allowed to sit in pooled water during wet conditions. If the building is to sit on soil or grass it **MUST** be erected on pressure treated wooden 50mm x 50mm or similar bearers **(These are not supplied in the kit).**

Rowlinson Garden Products recommend using pressure treated bearers with all buildings on any type of base.

2. Window frames

Lay the window panel on the floor. Fit the hinges the Long edge of the window frame as shown in the diagram using 2 x 20mm screws per hinge, stand the hinge end of the window on the window panel, making sure it is centred at the top of the window opening. Open the hinges and secure them to the window panel frame using 3 x 20mm screws per hinge. On the inside of the window panel fit the window stay and its two posts using 6 x 25mm black screws as shown in the diagram. For the two fixed windows, drill four pilot holes on the inside of the frame and secure the frame in place using 4 x50mm screws.

Opening Window frames x 3

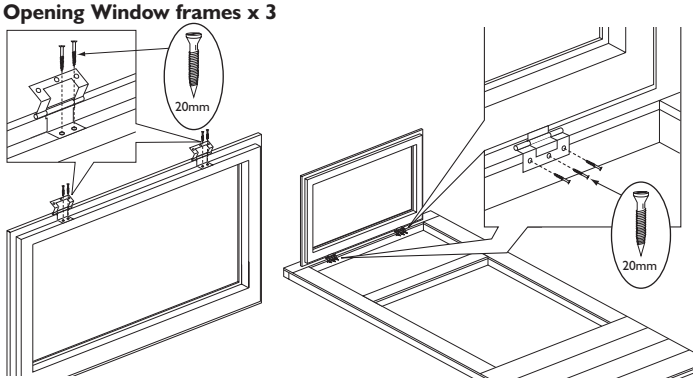

Fix window frames x 2

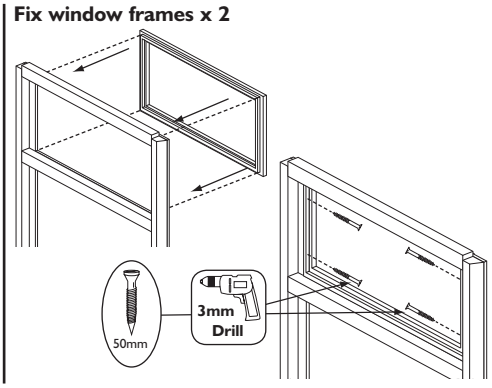

3. Wall panels

Position the 570mm wide wall panel and a large wall panel on the floor as shown. Note how the panel frames sit on the floor with the panel cladding overhanging the floor edge. Ensure square and secure using 4 x 50mm screws, screw through the frame of the small panel into the frame of the large panel. Position a 526mm wide wall panel next to the large panel, ensure square and secure them together in the same way. Continue adding the rest of the panels as shown in the diagrams using 4 x 50mm screws for all square and straight panel joins. For angled panel joins use 4 x 63mm screws per join. Lift the apex panel on top of the back wall, make sure the bottom shiplap board of the apex panel fits correctly into the top shiplap board of the back panel. Secure using 4 x 50mm screws, screw up through the top frame of the back panel into the bottom frame of the apex panel.

Square & straight panel joins

3mm Drill

Drill pilot holes with a 3mm drill bit for all screws in this section.

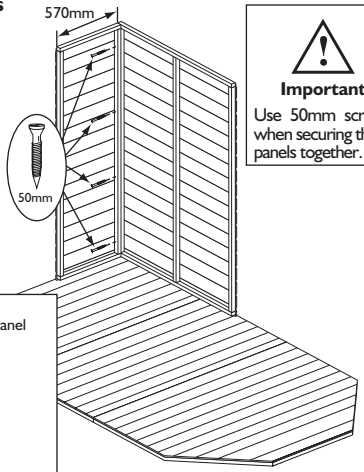

Important

Use 50mm screws when securing these panels together.

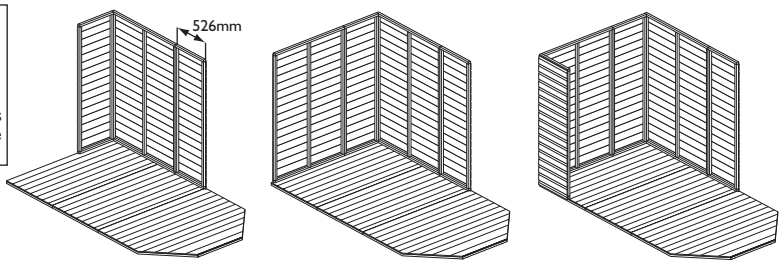

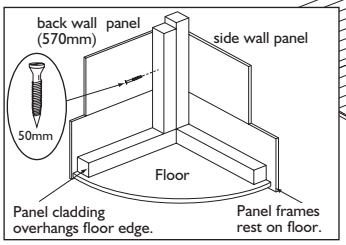

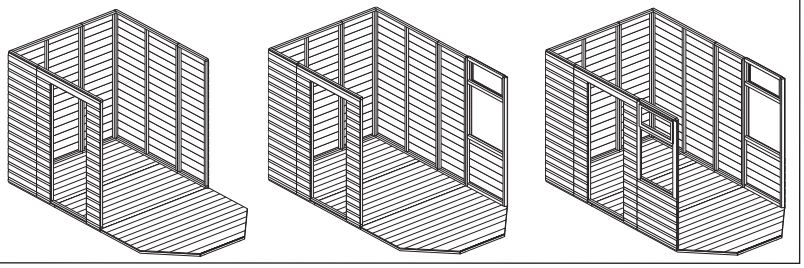

Angled panel joints

Important

Use 63mm screws when securing these panels together.

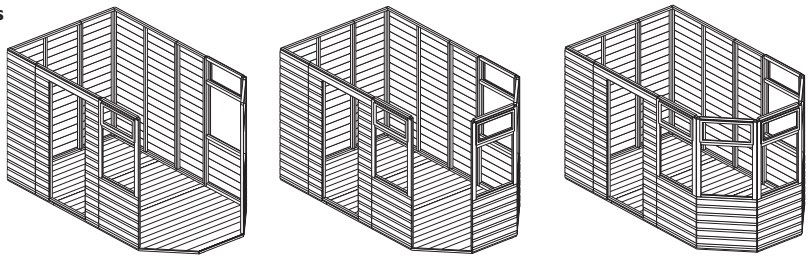

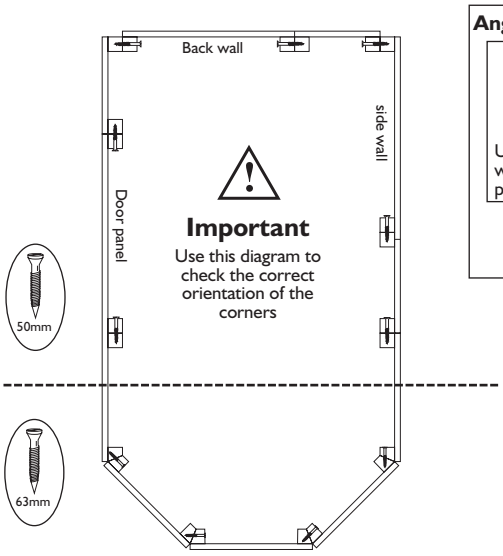

Important

Use this diagram to check the correct orientation of the corners

Apex panel

Ensure the back panel and apex panel interlock correctly.

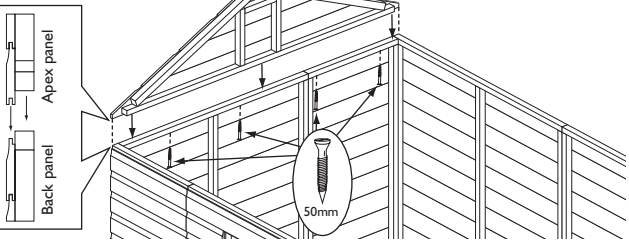

4. Roof part 1

Build the two large roof sections using the four solid roof panels by joining the panel frames together, ensure the frames are flush with each other and secure using 2 x 50mm screws for each panel join. Assemble the roof centre block with the internal roof capping, have the block sitting central on the cap except at the flat end where the two components should be flush with each other. Secure the capping to the centre block using 8 x 50mm screws. Screw through the cap into the block. Insert the flat end of the roof block assembly into the apex, secure using 2 x 50mm screws. screw up through apex frame into the roof block assembly. Ensure the roof block assembly is sitting level and securely support the other end using a prop. When the block is secure and fully supported lift on the two roof sections and secure to the walls panel using 6 x 40mm screws per side.



Drill pilot holes with a 3mm drill bit for all screws in this section.

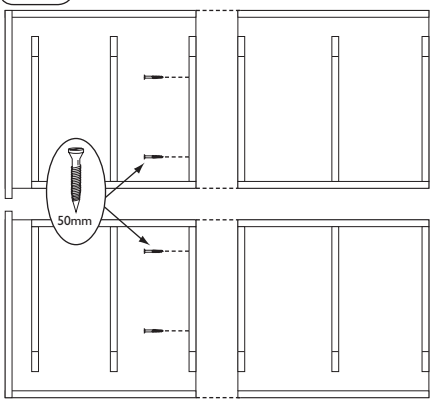

Roof centre block and inside capping

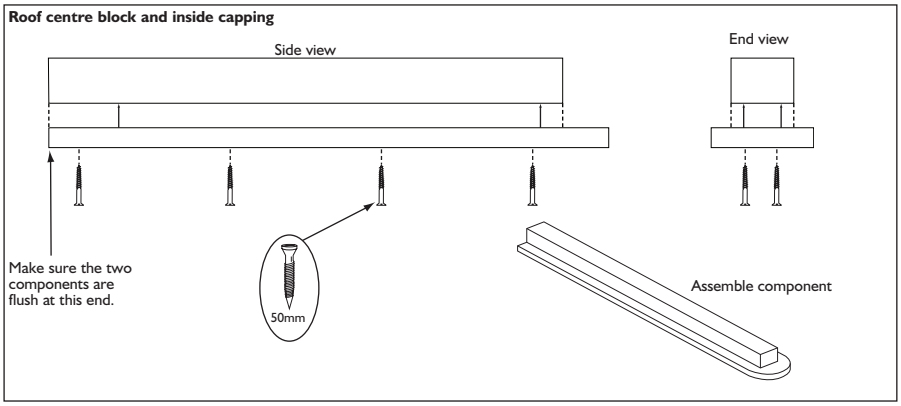

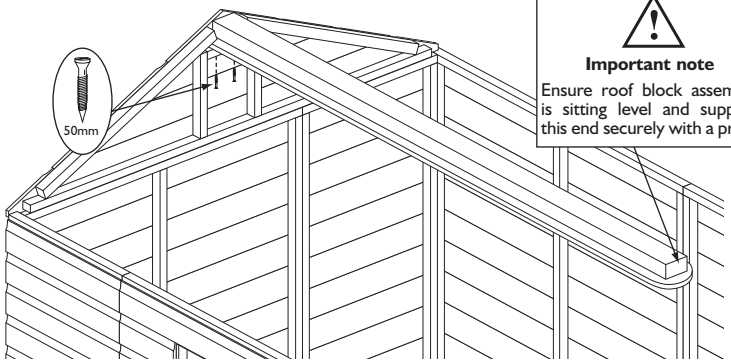

Important note

Ensure roof block assembly is sitting level and support this end securely with a prop.

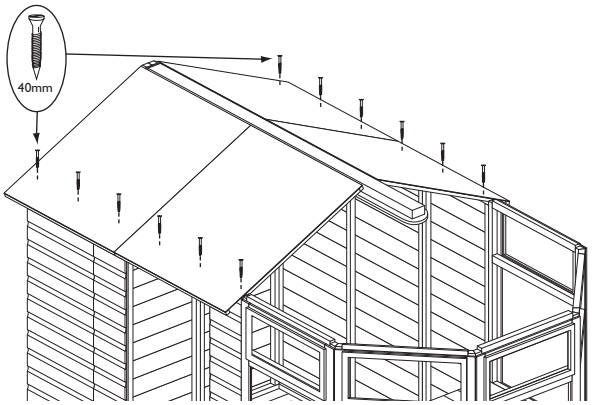

5. Roof part 2

Lift on the left and right-hand glazed roof panels. Add a bead of silicon down the edge adjoining the solid roof panels and secure to the roof sections using 2 x 50mm screws per panel.



Drill pilot holes with a 3mm drill bit for all screws in this section.

Important note

Add a bead of silicon down the edge of each panel before finally securing together.

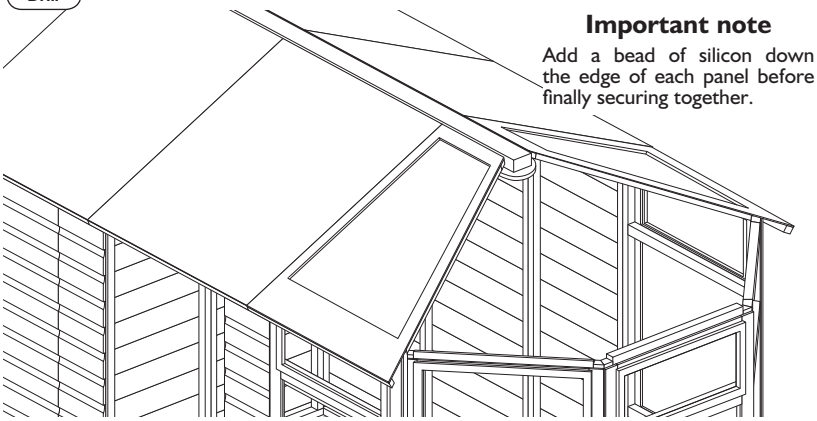

View from inside the potting store looking up

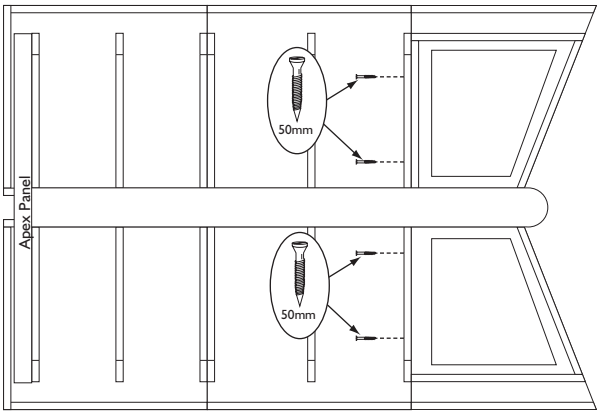

6. Roof part 3

Position the triangular roof panels as shown, loosely secure them together using 2 x 50mm screws per join as shown. Adjust the roof panels to achieve the best fit. Add a bead of silicon between each roof panel then fully tighten the screws.



Drill pilot holes with a 3mm drill bit for all screws in this section.

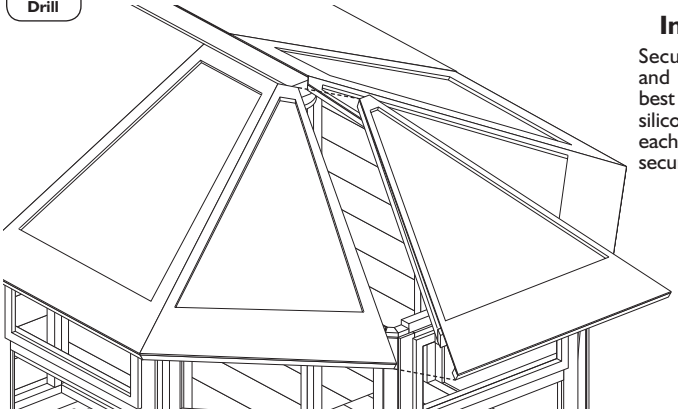

Important note

Secure panels loosely and adjust to achieve best fit. Add a bead of silicon down the edge of each panel before finally securing together.

View from inside the potting store looking up

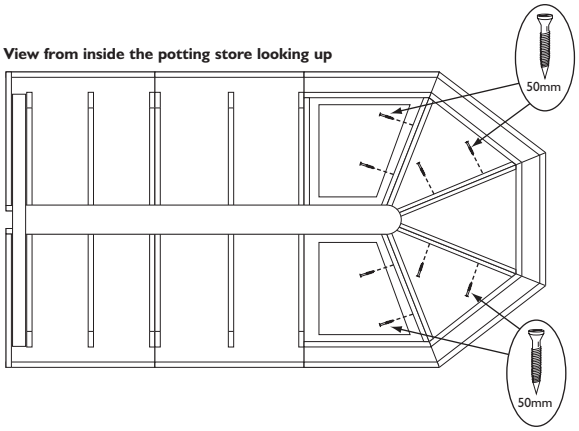

7. Roof part 4

Check the whole roof is sitting correctly and adjust if necessary. From the inside of the potting store, secure the solid roof panels to the apex panel using 2 x 50mm screws for each half of the roof then secure the solid roof panels and left and right-handed glazed panels to the roof block assembly using 6 x 63mm screws each side. Fix the glazed panels down to the wall panels using 2 x 50mm screws per panel, screw through the roof panel frame into the top of the window panels. screw the two roof support rails to the roof framing using 2 x 50mm screws per rail.

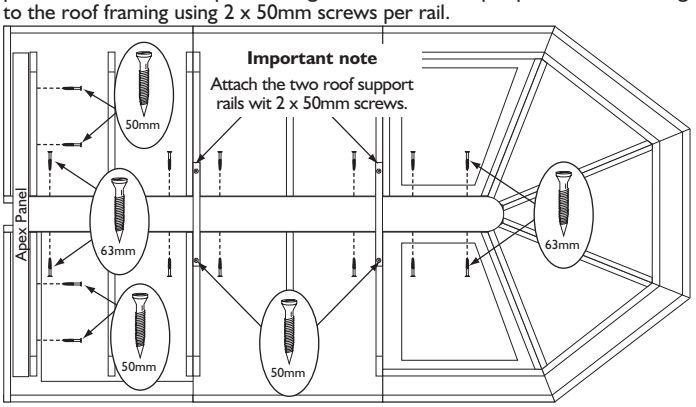

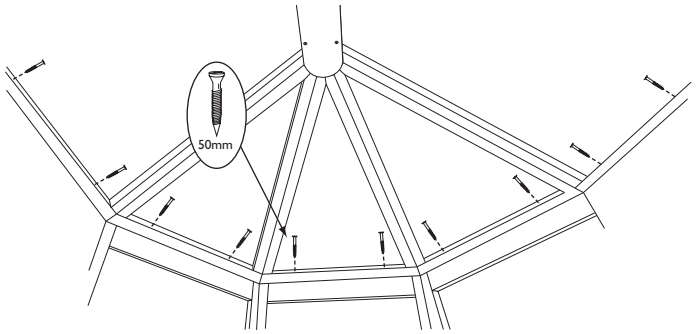

8. Secure the walls to the floor

Ensure the panels are sitting square on the floor. Secure using 19 x 63mm screws, screw through the panel frames and floor into the floor joists.



Drill pilot holes with a 3mm drill bit for all screws in this section.

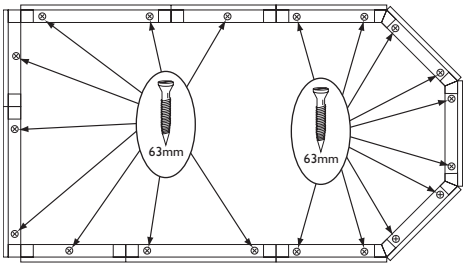

9. Roof felt

Cut the 4m felt roll into two equal parts. Place a length of felt over the solid part of one side of the roof. Along the lower edge of the roof leave an overhang of felt of at least 45mm and at the end where it meets the glazed panels have the felt over lap the glazing by at least 25mm. Fold down the felt along the lower edge and secure to the felt batten using 20 x10mm felt nails evenly spaced. Tension the felt up the roof and secure along the upper edge using 5 x 10mm felt nails. Repeat this for the second piece of felt on the other side of the roof. Once the two pieces of felt are in place position the 2m roll of felt over the roof ridge making sure it sits centrally and overlaps the other two felt pieces, attach using 20 x 10mm felt nails evenly spaced, along each lower edge of the piece of felt. Dress down the felt pieces at the apex end and attach to the roof battens using 10 x 10mm felt nails. When all the felt is in fixed in position, trim of any excess.

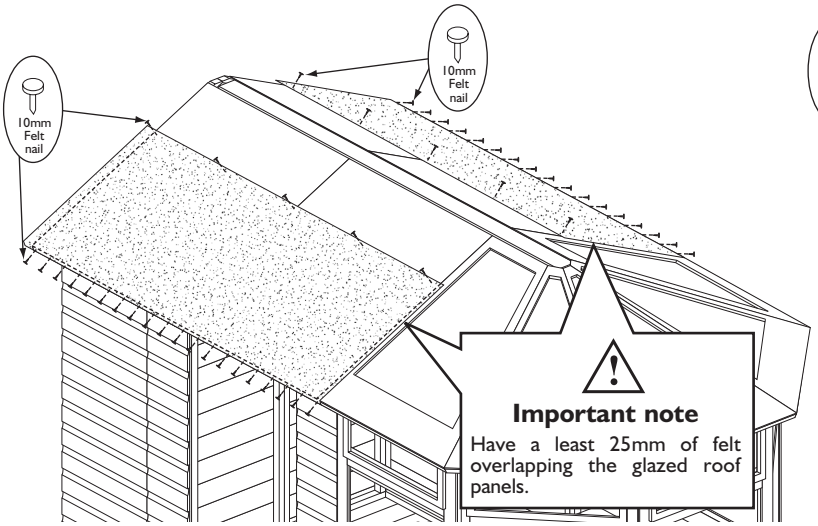

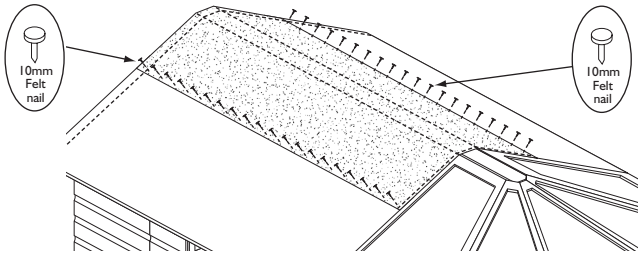

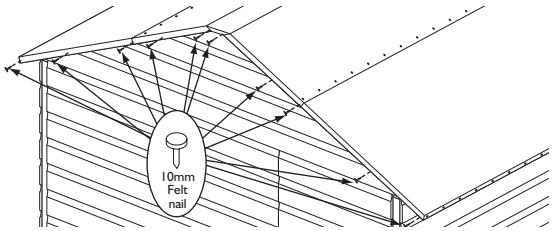

10. Roof capping and apex bargeboards

Fix the acorn finial centrally to the rounded end of the roof capping piece using 1 x 50mm screw, screw up through the capping into the base of the acorn finial. Place the capping piece on top of the roof and screw down through the capping into the centre block using 8 x 50mm screws. Fasten the two apex bargeboards to the apex end of the roof, position so that the two boards meet evenly at the ridge of the roof, secure using 4 x 40 mm screws through each board into the roof battens. Position the finial centrally over the join of the two bargeboards and secure using 2 x 40mm screws.

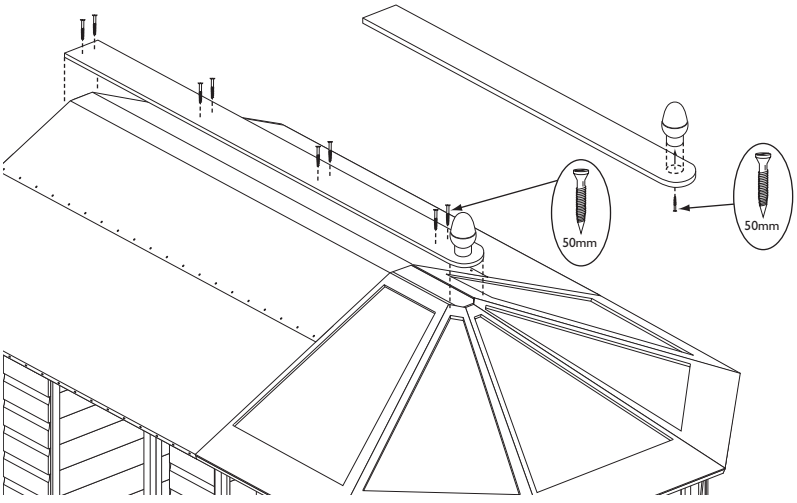

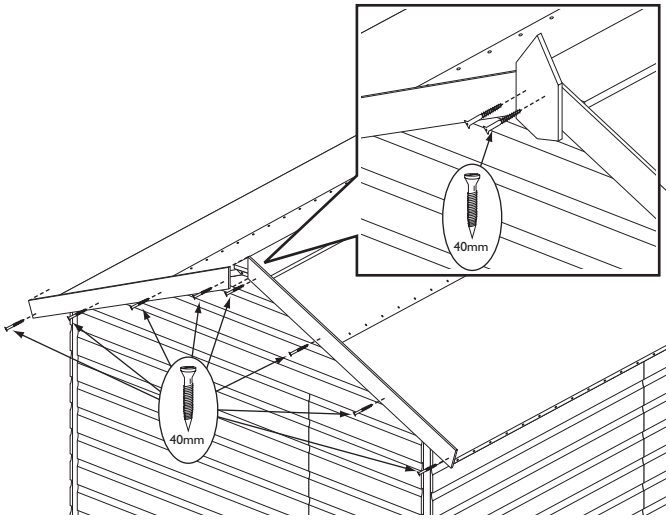

11. Roof coverstrips

Under the flap of roof felt that overlaps the glazed panels, add a good bead of silicon. Drill four pilot holes evenly spaced along the length of each roof felt to glazed panel coverstrips. Align over the join of the solid roof panel and glazed panel, tuck under the roof capping and secure using 4 x 25mm screws. Drill four pilot holes evenly spaced along the length of each angled roof coverstrip. Apply a good bead of silicon along the underside of the strips. Position a strip over each of the roof panel joins, tucking each one under the top cap with the pointed end pointing down the roof, Secure each strip with 4 x 25mm screws.



It is recommended to drill pilot holes with a 3mm drill bit for all screws in this section.

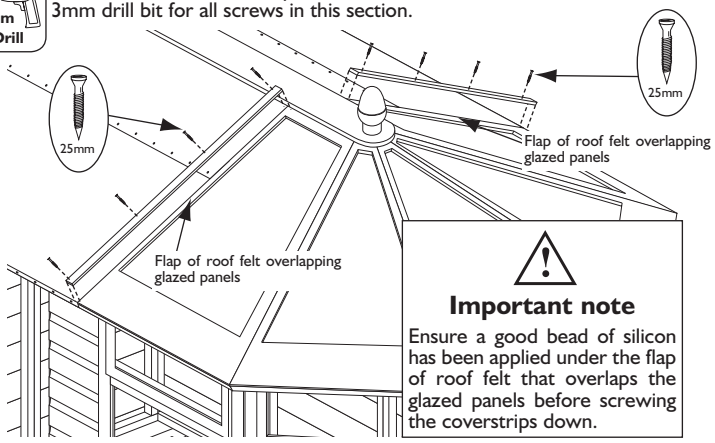

Important note

Ensure a good bead of silicon has been applied under the flap of roof felt that overlaps the glazed panels before screwing the coverstrips down.

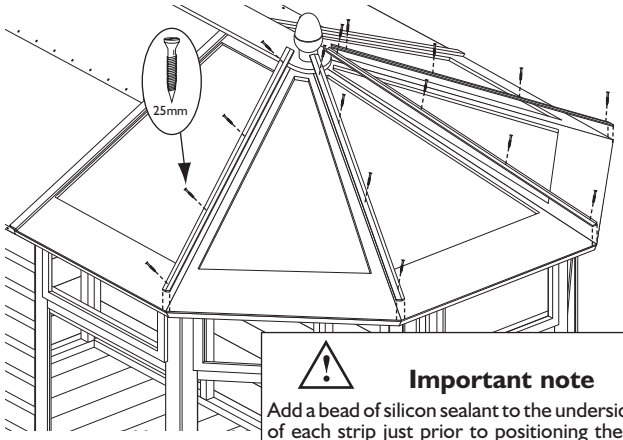

Important note

Add a bead of silicon sealant to the underside of each strip just prior to positioning them and fixing them down.

12. Corner/joint coverstrips

Secure the seven corner/joint coverstrip and the four angled corner coverstrips in the positions shown in the second diagram. Each strip is fixed using 4 x 30mm nails evenly spaced along the length of the strip

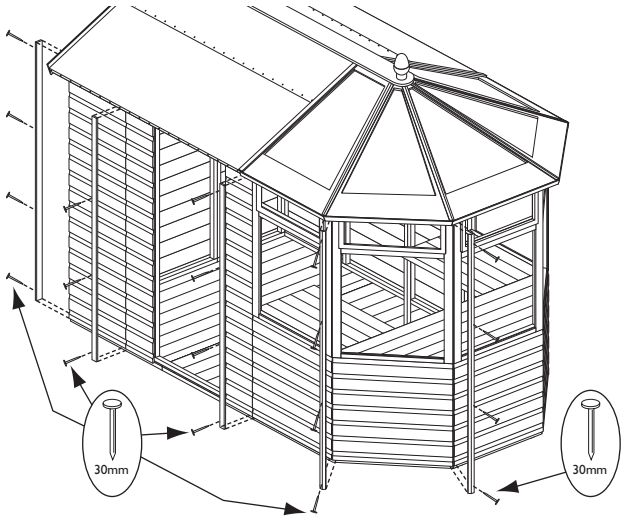

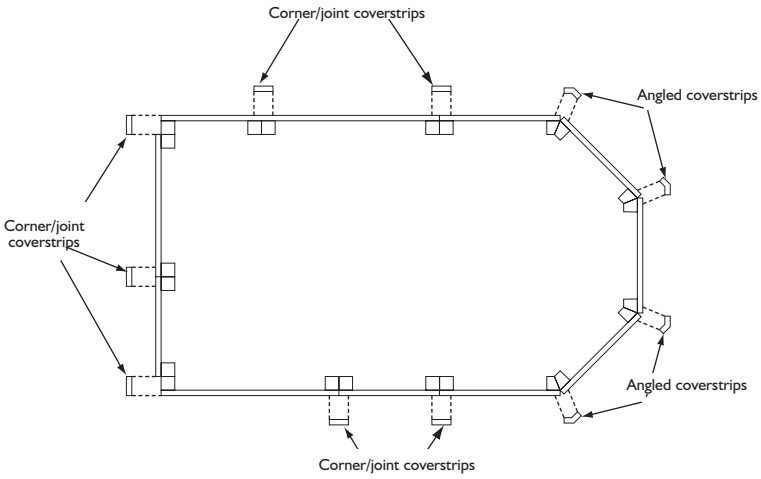

13. Door

Attach the door rebate strips flush to the framing of the door opening using 5 x 30mm nails per strip. Position the door in the opening and secure in place with three T-hinges and 7 x 25mm screws per hinge. Fit the pad bolt to the door using 4 x 25mm screws and 2 x 50mm coach bolts, nuts and washers. It will be necessary to drill holes for the coach bolts using a 6mm diameter drill bit. Fit the catch plate to the wall panel ensure the bolt is able to slide into the catch plate. Attach using 2 x 25mm screws and 2 x 50mm coach bolts, nuts and washers. Position the turn button near the top of the door, secure to the wall panel using 1 x 25mm screw.

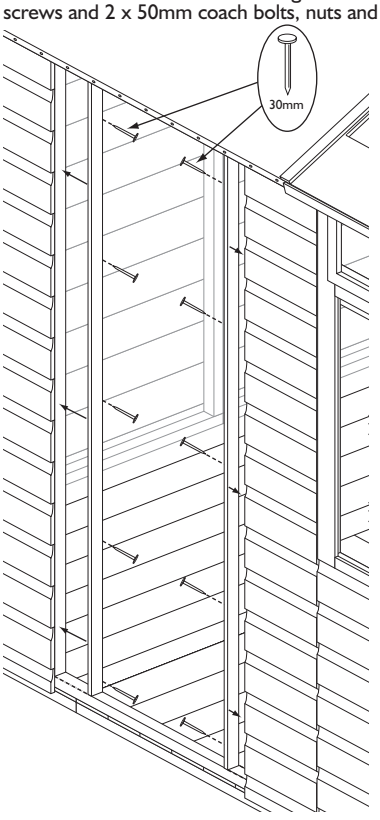

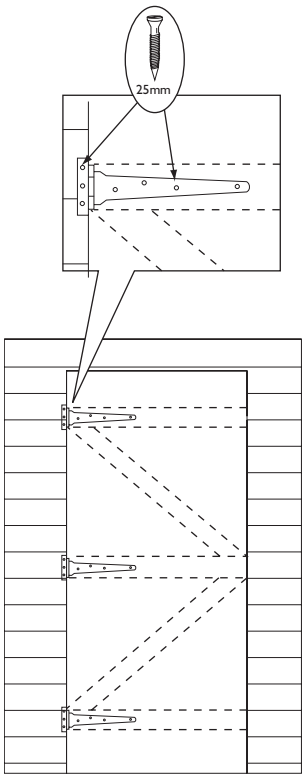

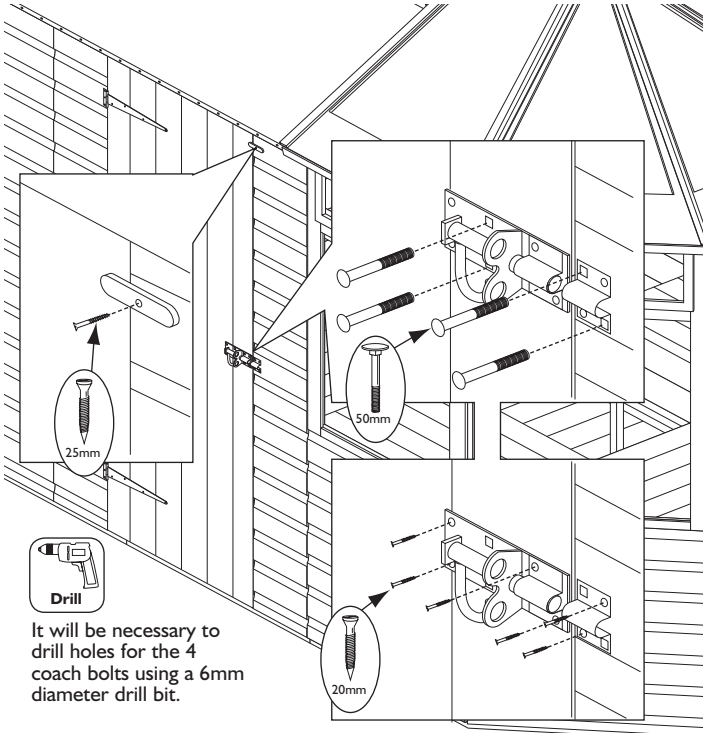

It will be necessary to drill holes for the 4 coach bolts using a 6mm diameter drill bit.

14. Glazing

It is recommended that a waterproof sealant is applied around the edge of the glazing before fitting. Place window pane on the inside of the window frame, nail the beading into position. For the large windows using 4 x 25mm nails for each vertical bead and 3 x 25mm nails for each horizontal beading. For the small windows use 2 x 25mm nails for the vertical beading a 3 x 25mm nails for the horizontal beading.

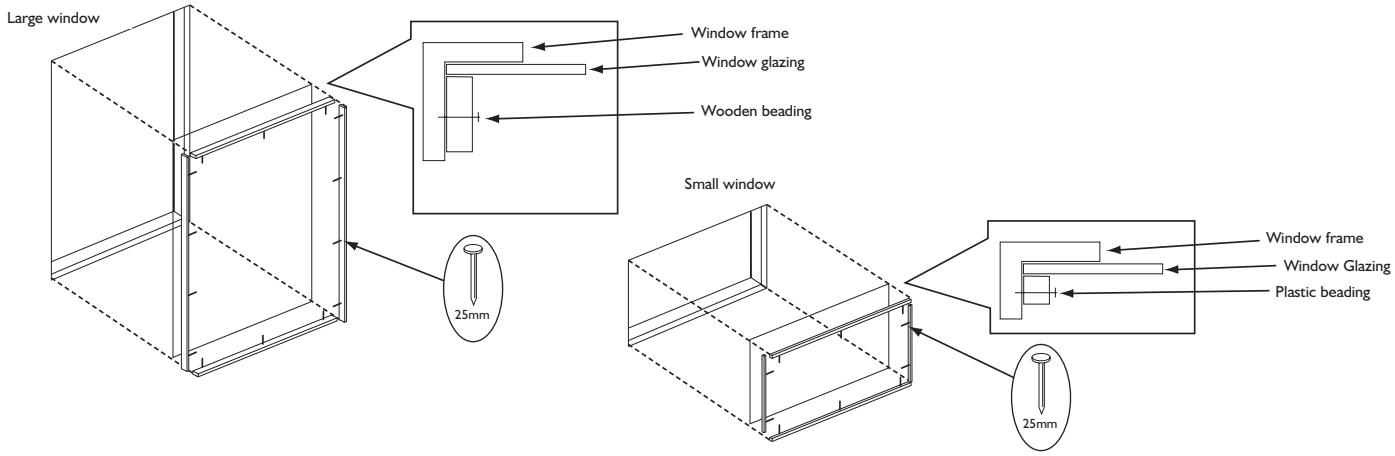

15. Potting Benches

Position the potting table underneath the three middle windows as shown, align level with the window cill and secure underneath the table using 6 x 50mm screws screw through the framing of the potting table into the window cill. Position a side potting table under each of the remaining windows attach each with 2 x 50mm screws to the window cill and secure to the main potting table using 2 x 50mm screws. The four potting table legs are secured underneath the tables as shown using 1 x 50mm screw at the top of each leg, screw though the leg into the framing of the table. Ensure each leg is vertical and secure to the floor using a Metal L-bracket and 4 x 25mm screws per bracket.

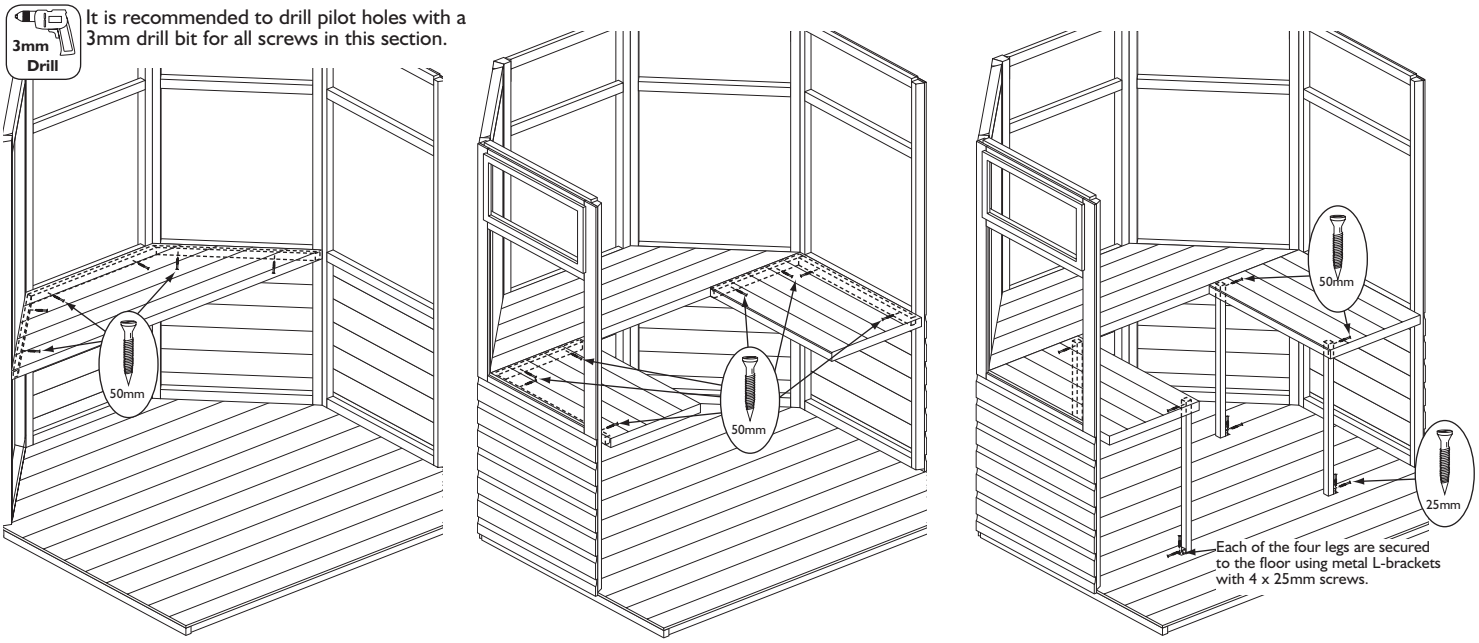

Important information - retain for future reference

Shiplap buildings come ready stained but this is only a preparatory treatment. To **VALIDATE** the guarantee, the building must be properly treated with a recognised external wood preserver **WITHIN 3 MONTHS** of assembly and **RE-TREATED ANNUALLY** thereafter.

Adequate provision must be made to ensure ground contact is avoided and air is able to circulate underneath the building. Placing the building on a concrete pad or slab base is acceptable provided that the building is not allowed to sit in pooled water during wet conditions. If the building is to sit on soil or grass it **MUST** be erected on pressure treated wooden 50mm x 50mm or similar bearers **(These are not supplied in the kit).** Rowlinson Garden Products recommend using pressure treated bearers with all buildings on any type of base.

Timber Information.
As timber is a natural material, there are certain weather conditions that may affect the materials properties. In times of excessive dry spells the material may lose some of its internal moisture causing a certain degree of shrinkage on a panel and in periods of excessive rain there will be a certain amount of swelling throughout the wooden panels. This process can not be avoided. If you have problems with certain boards shrinking in dry spells try to decrease the amount of direct sunlight on the building or the amount of air passing over the building. During hot spells spray water directly onto the panels with the aid of a garden hose.

If in doubt of any aspect regarding the assembly, use or safety of your building please contact us :

Help Line: (Normal Office Hours) 01829 261 121

Email: support@rowgar.co.uk

ROWLINSON GARDEN PRODUCTS LIMITED
Green Lane
Wardle Nr. Nantwich
Cheshire
CW5 6BN
www.rowgar.co.uk

We constantly improve the quality of our products, occasionally the components may differ from the components shown and are only correct at time of printing. We reserve the right to change the specification of our products without prior notice.

2018 © Rowlinson Garden Products Ltd