PLAN VIEW

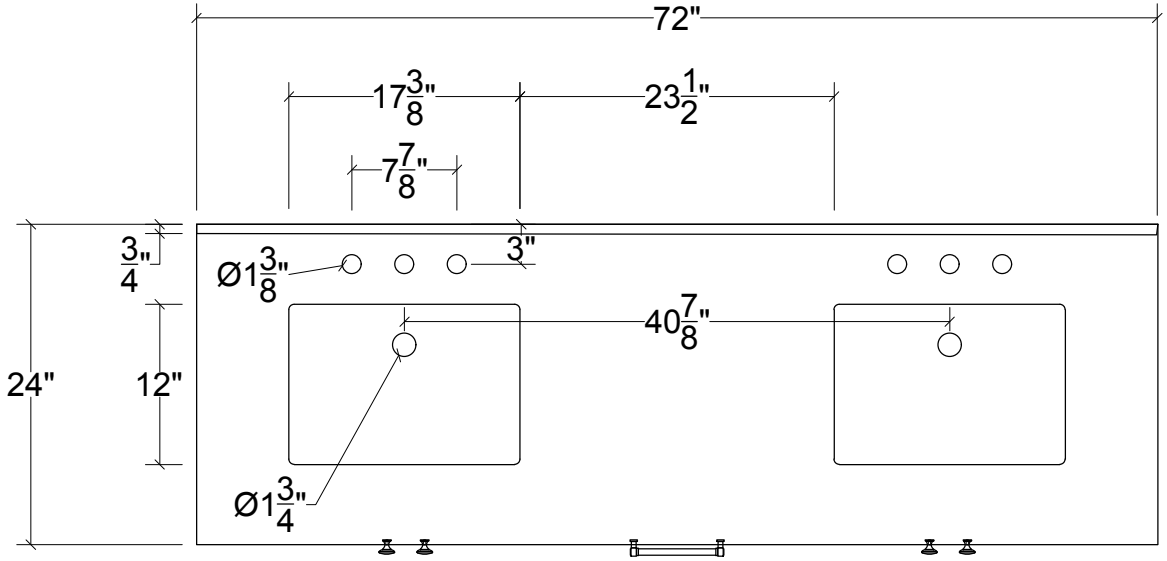

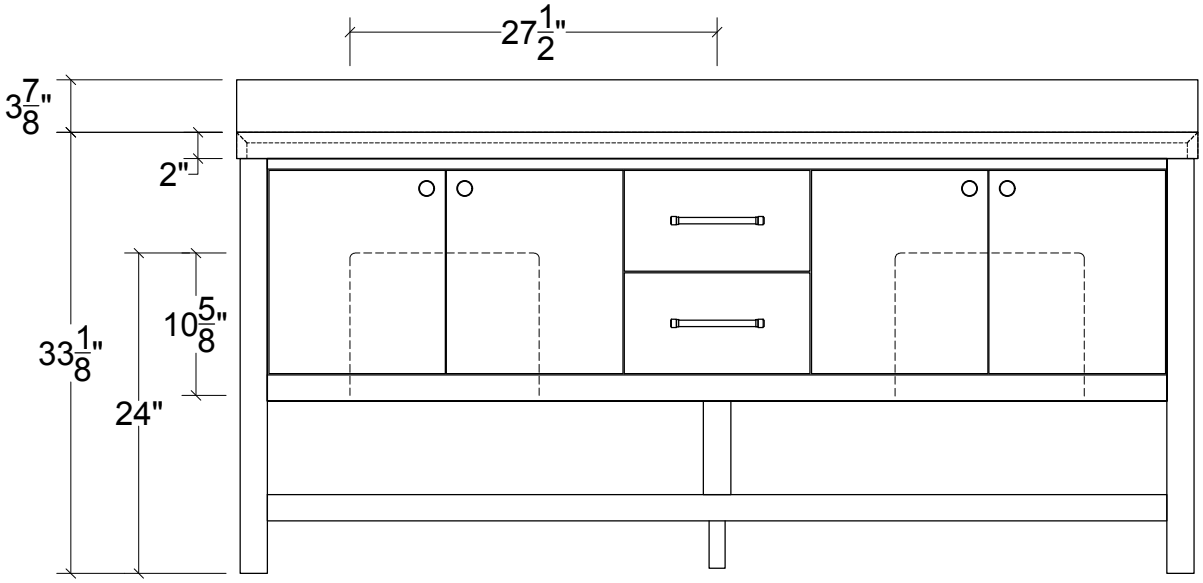

FRONT ELEVATION

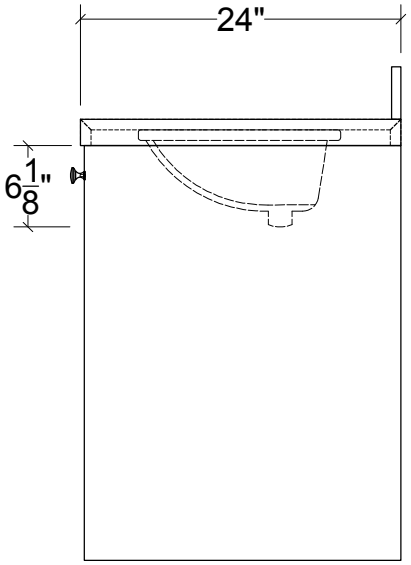

SIDE ELEVATION