INSTALLATION INSTRUCTION

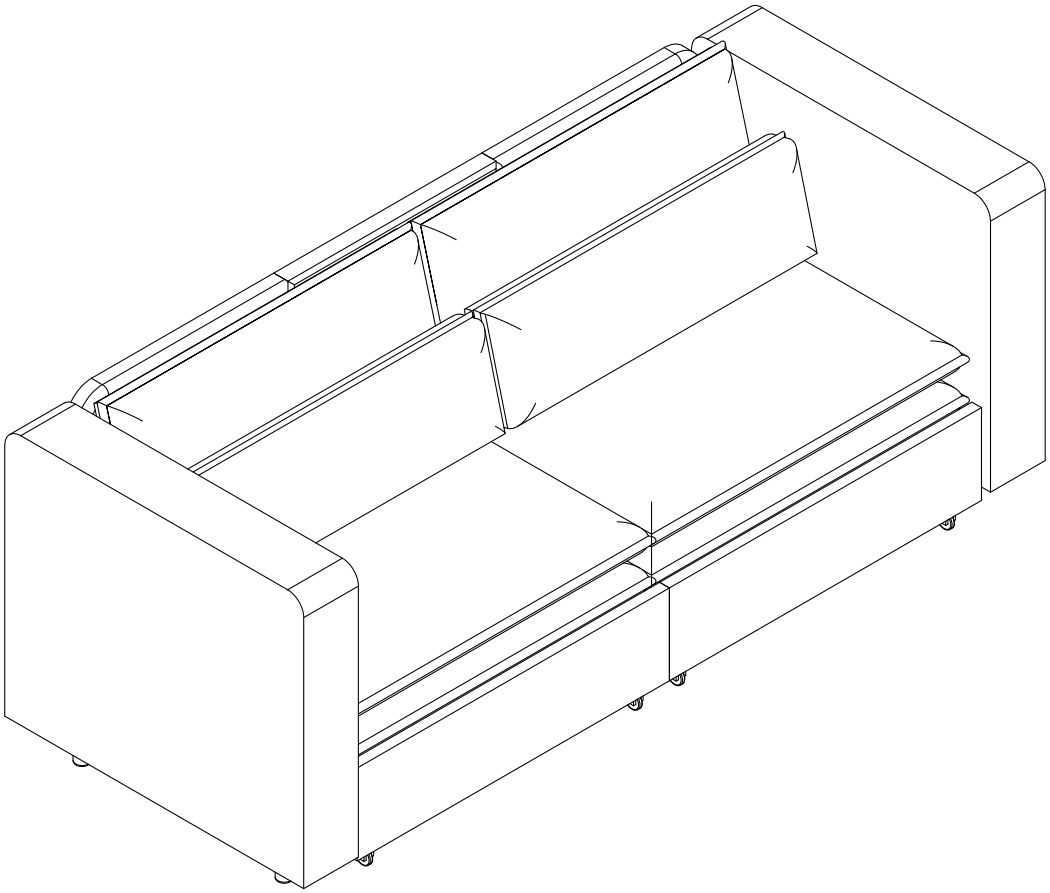

2055

Step 1 Use Screw A, Flat Washer D, and Nut E to secure Footrest C in the position shown in the diagram, while connecting Part 1 and Part 2 together.

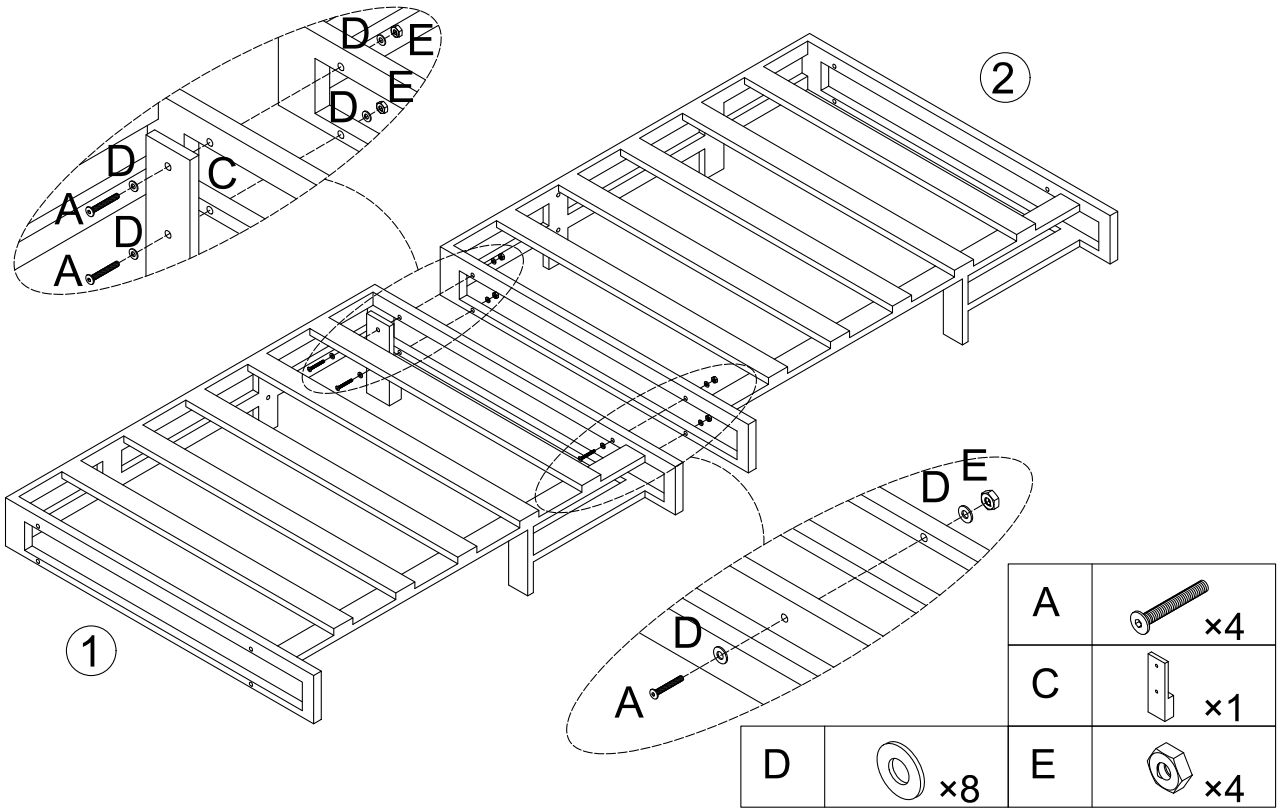

Step 2 Use Screw G, Flat Washer D, and Nut E to secure Footrest C and Trapezoidal Bracket F in the positions shown in the diagram.

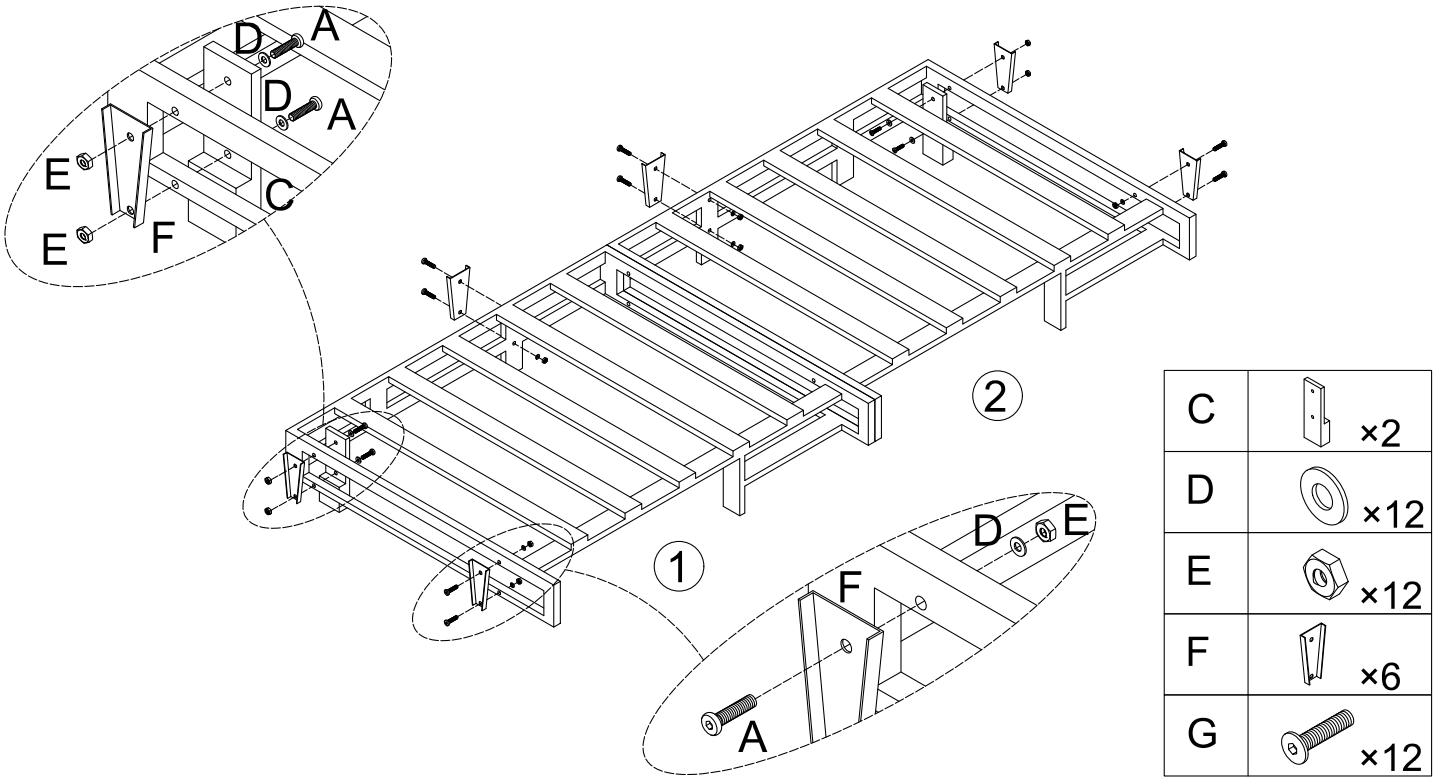

Step 3

The sofa body is equipped with pre-drilled holes designed to accommodate locking bolts, which effectively prevent unintended movement when the sofa is in use. To convert the sofa into a bed, simply remove the bolts to restore full functionality.

It is worth noting that the sofa is engineered to remain stable under normal conditions. This additional securing mechanism is provided as a preventive measure for user peace of mind. We hope this feature enhances your experience and appreciate your understanding of our thoughtful design. Thank you！

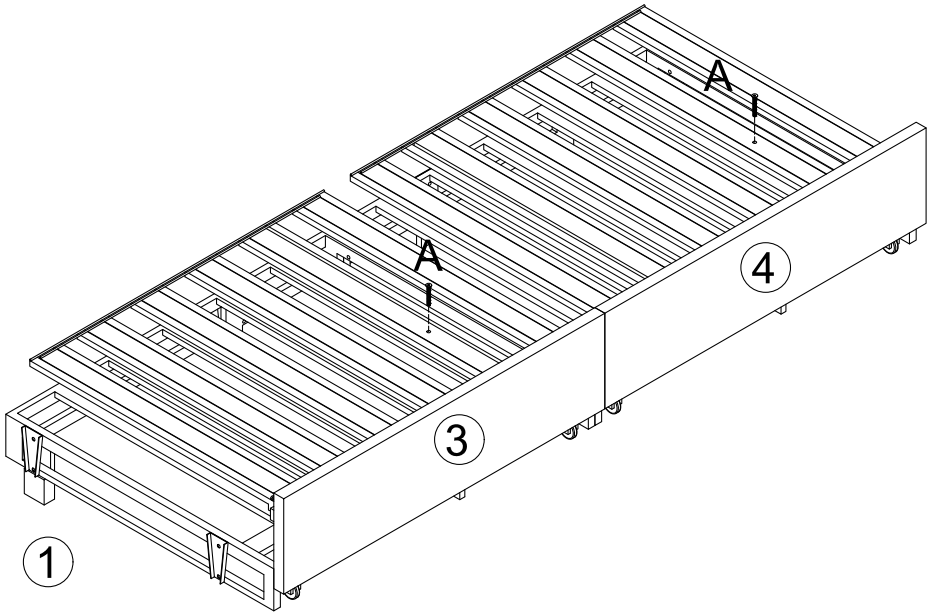

A	×2

Step 4

Use Screw B to install Part J in the position shown in the diagram.

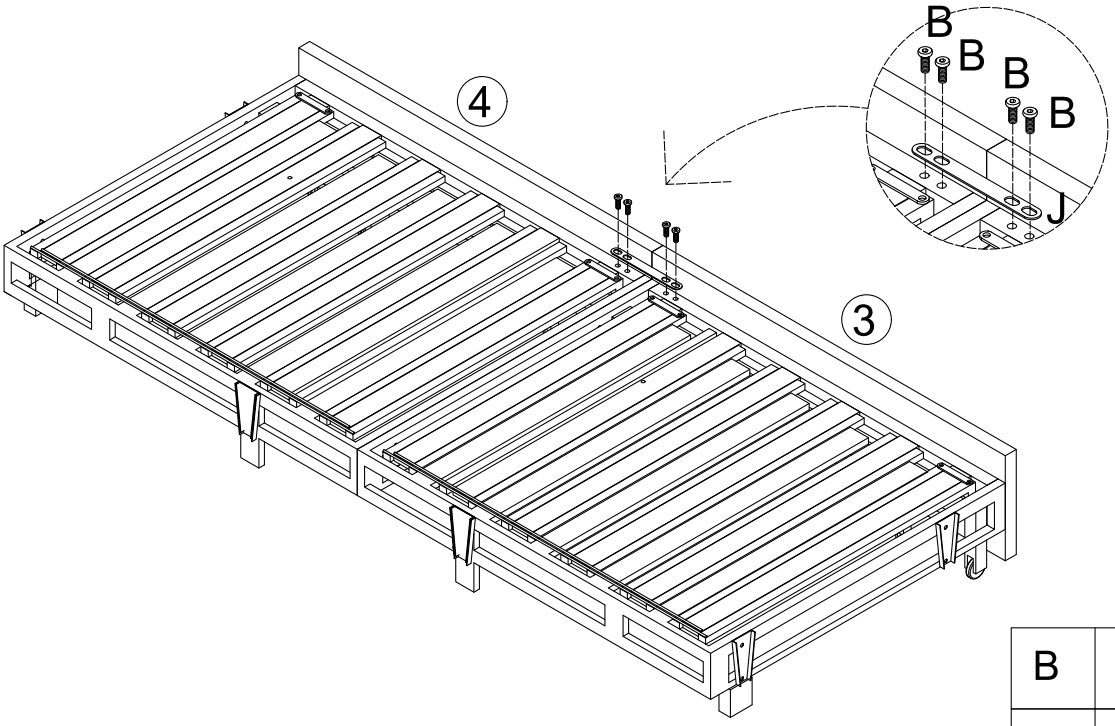

B	×4
J	×1

Step 5 Connect Part 5/3 and Part 6/4 as shown in the diagram.

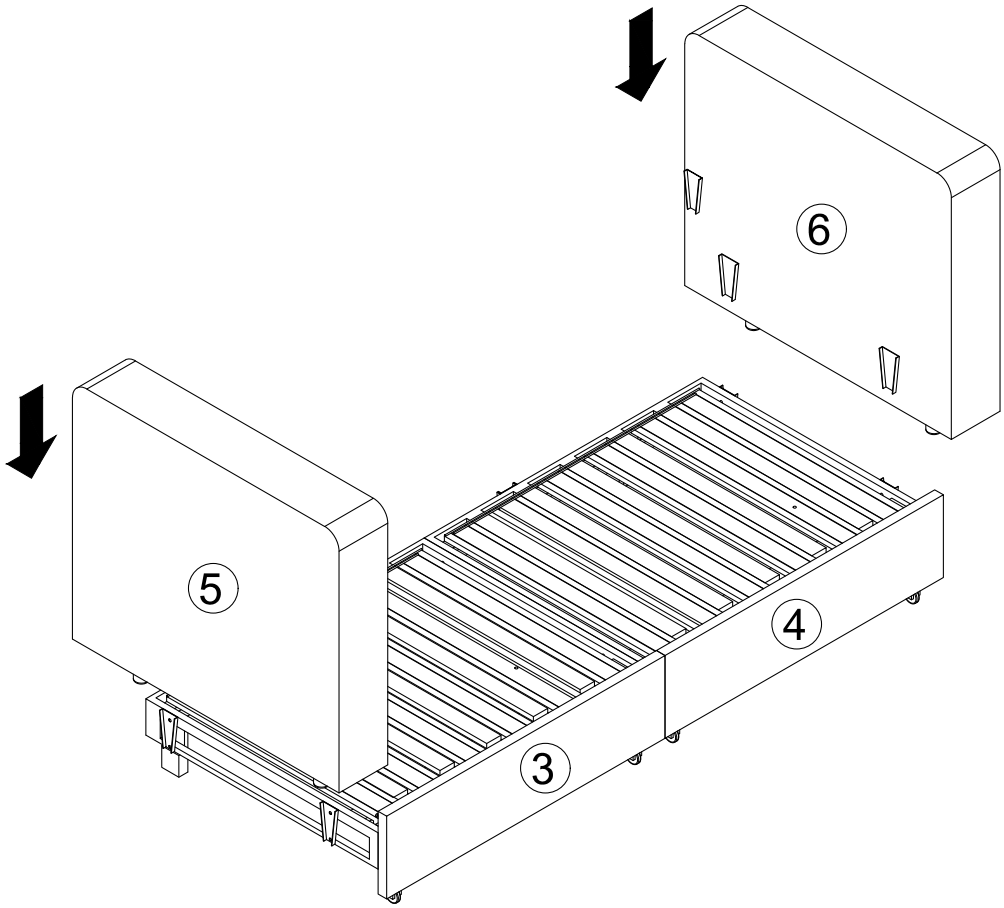

Step 6 Use Screw B to secure the L-shaped Bracket H in the position shown in the diagram.

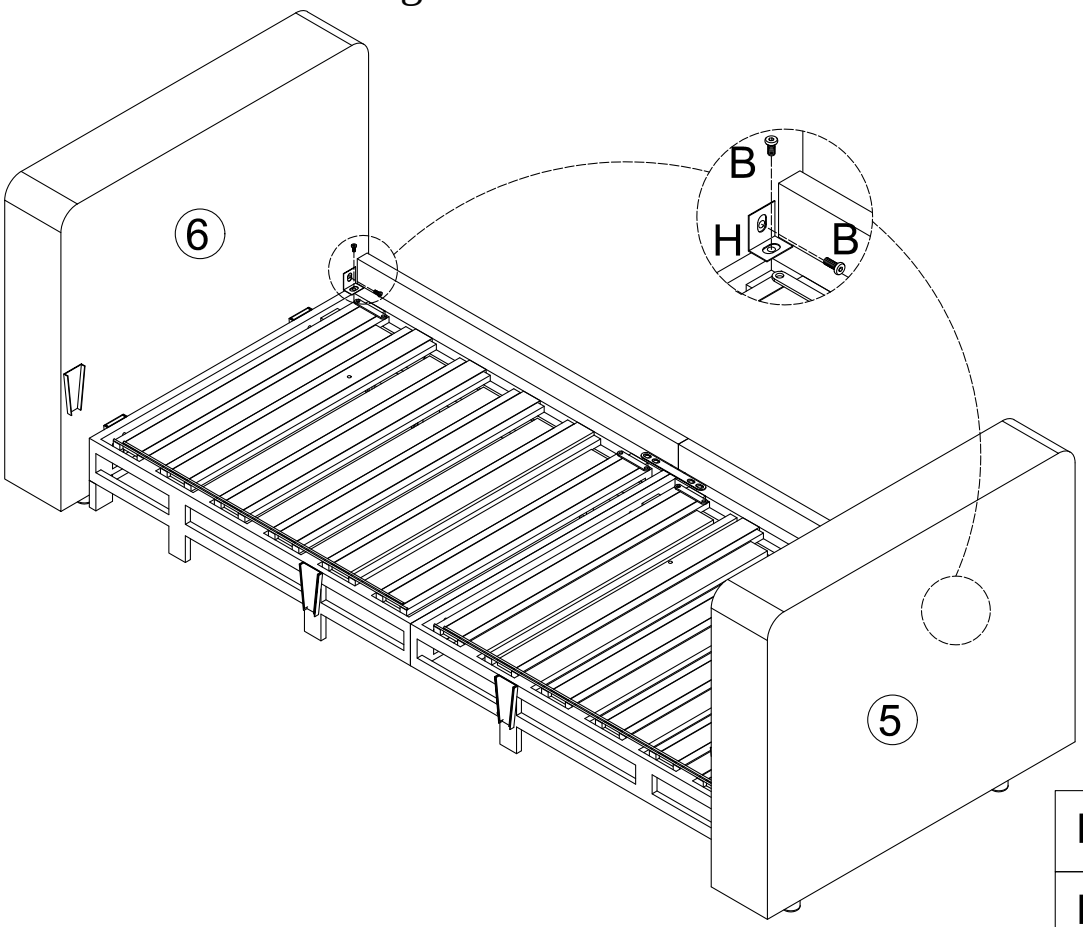

B		×4
H		×2

Step 7

Use Screw A, Flat Washer D, and Nut E to connect Part 7, Part 8, and Part 9 together.

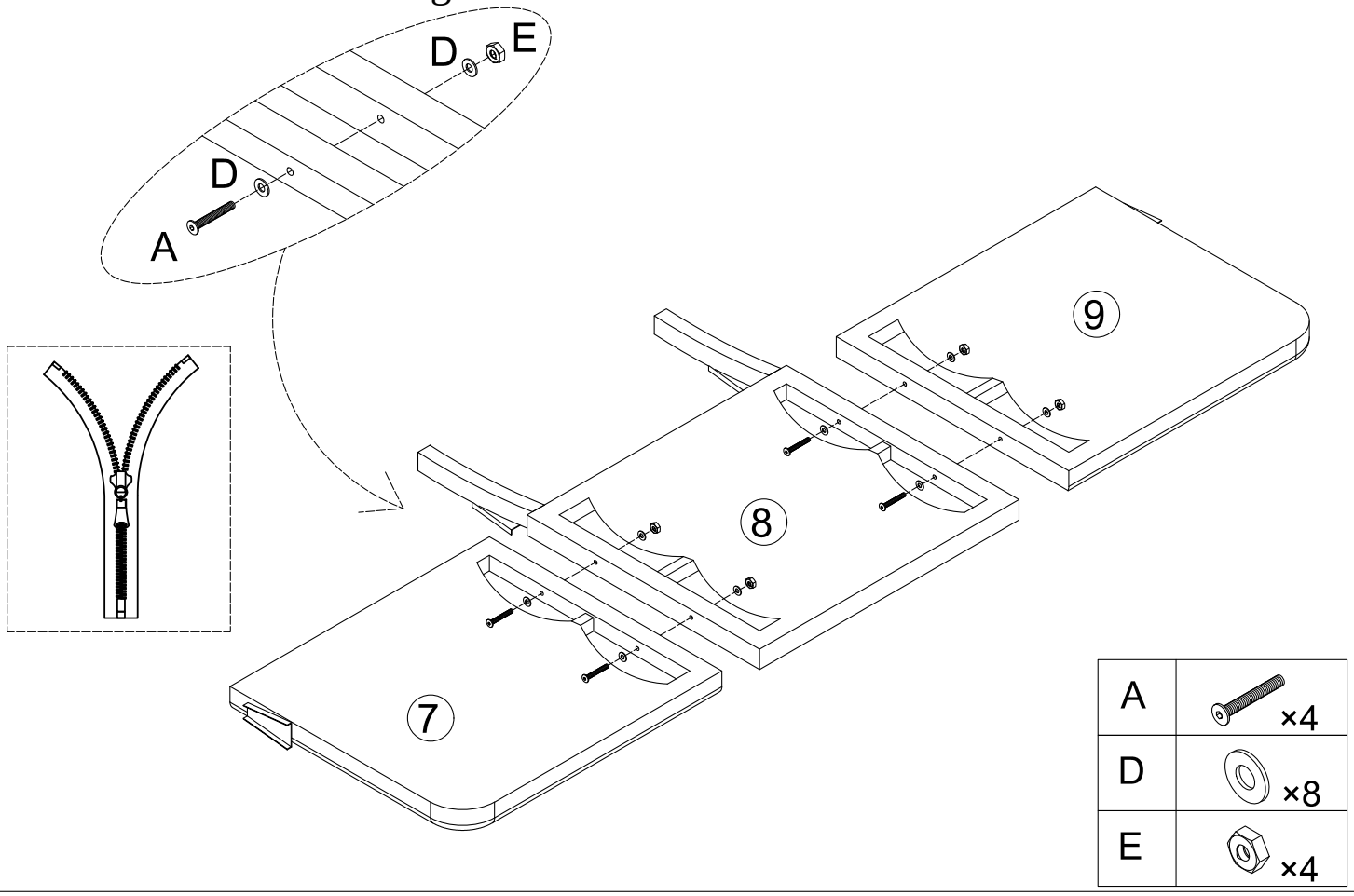

Step 8

Attach the backrest assembly from the previous step onto the sofa frame. Our assembly is now nearly complete.

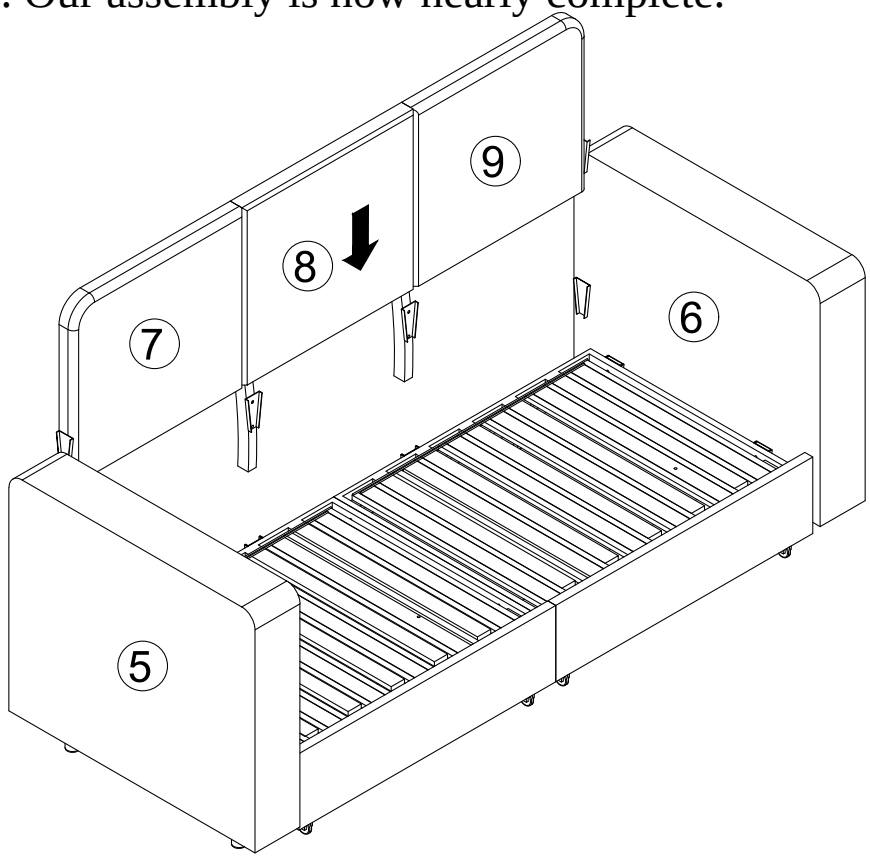

Step 9

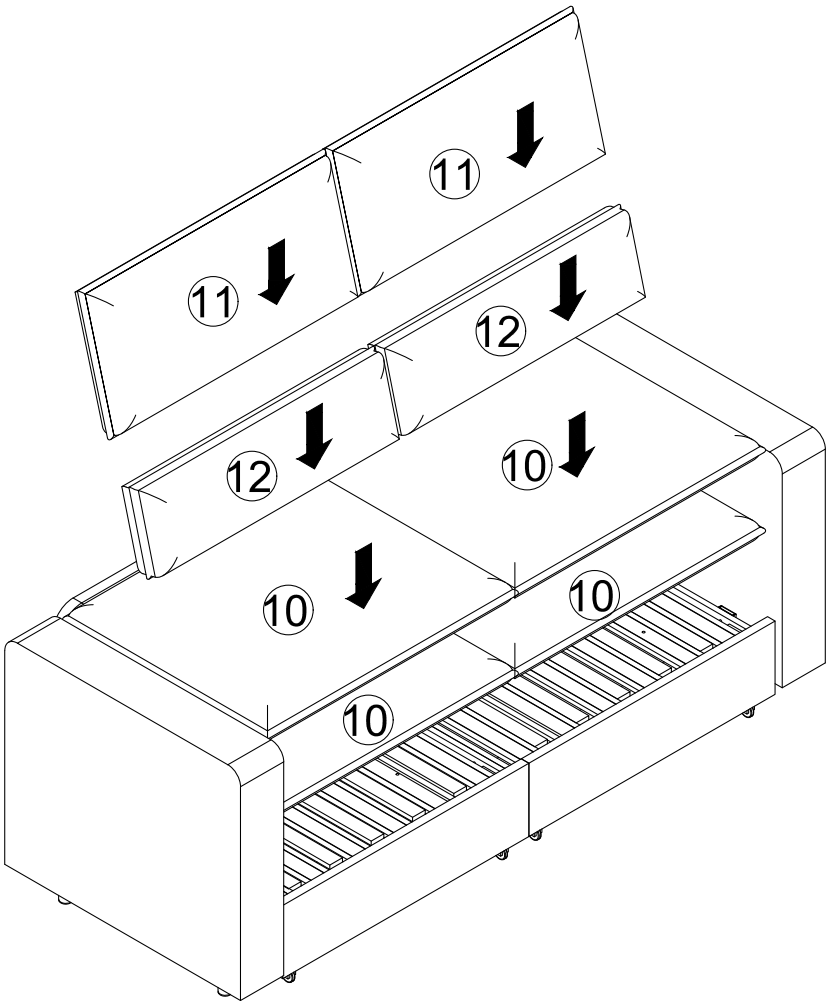
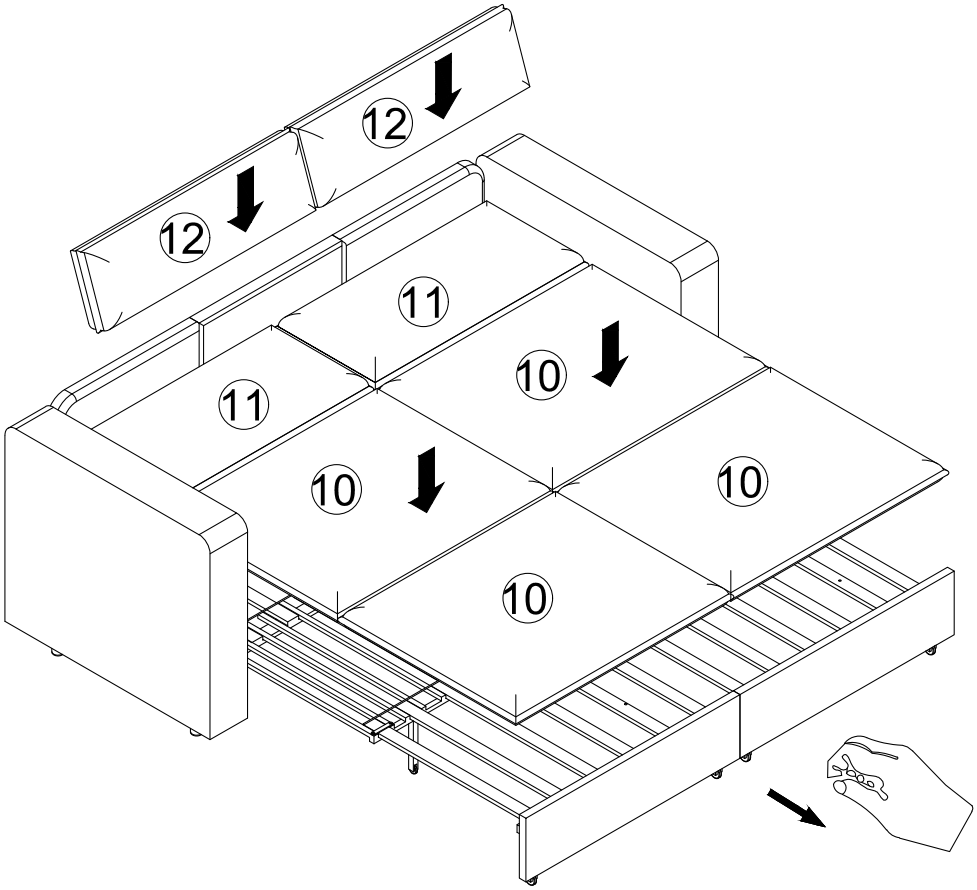
Step 10